12-4. Manual Feed Paper Empty Detection Mechanism

The Manual Feed Empty Sensor detects a sheet of paper on the Manual Feed Table.

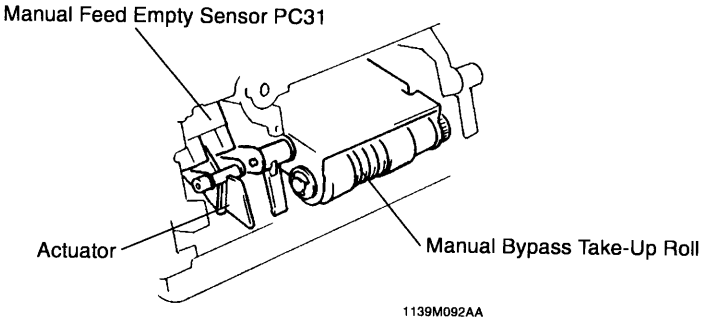

	CONTROL SIGNAL	Blocked	Unblocked	WIRING DIAGRAM
PC31	PWB-A PJ13A-6A	L	H	11-I

12-5. Manual Feed Take Up Control

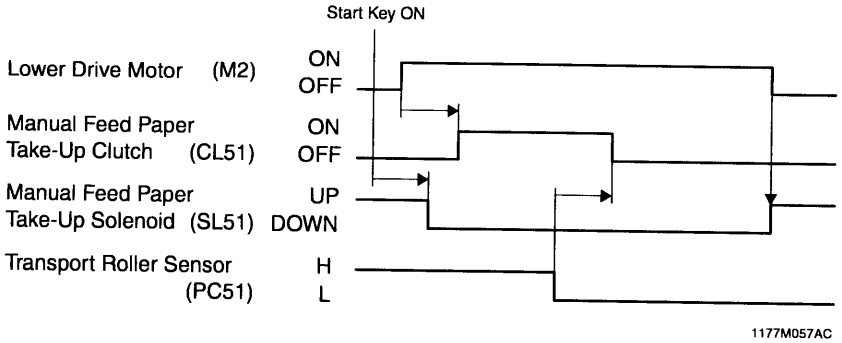

	CONTROL SIGNAL	ON	OFF	WIRING DIAGRAM
CL51	PWB-A PJ13A-4A	L	H	11-I
SL51 UP	PWB-A PJ13A-3A	L	H	11-H
SL51 DOWN	PWB-A PJ13A-2A	L	H	