13-4. Transport Drive Control

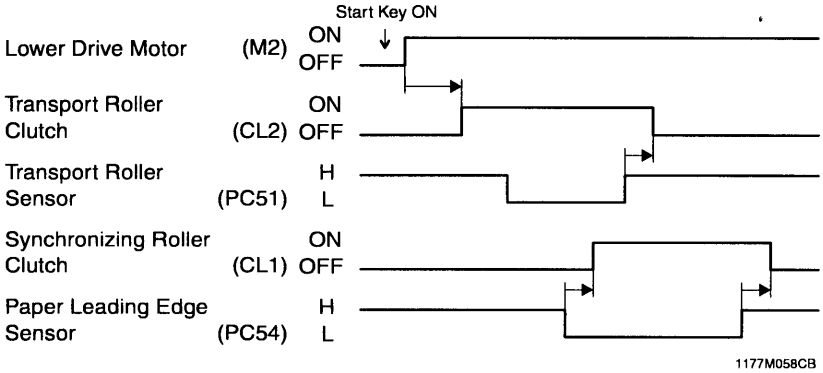

	CONTROL SIGNAL	ON	OFF	WIRING DIAGRAM
CL1	PWB-A PJ5A-4A	L	H	2-F
CL2	PWB-A PJ5A-2A	L	H	2-F

	CONTROL SIGNAL	Blocked	Unblocked	WIRING DIAGRAM
PC51	PWB-A PJ13A-5B	L	H	2-I
PC54	PWB-A PJ13A-2B	L	H	2-I