15 PC DRUM CLEANING SECTION

The Cleaning Blade scrapes off any toner remaining on the surface of the PC Drum.

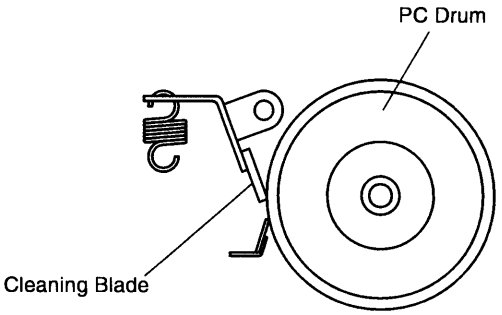

1177M035AA

15-1. Cleaning Blade Moving Mechanism

- The Cleaning Blade is moved back and forth while the PC Drum is turning to ensure that all residual toner is scraped cleanly off the surface of the PC Drum, thereby preventing the PC Drum as well as Cleaning Blade from deteriorating.
- Drive from a motor turns the Lateral Movement Cam, which results in the Cleaning Blade being moved back and forth.

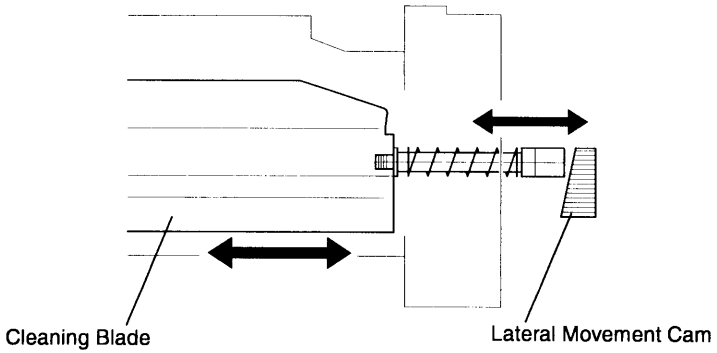

1177M006AA