16 MAIN ERASE SECTION

The light from the Main Erase Lamp neutralizes any surface potential remaining on the surface of the PC Drum after cleaning.

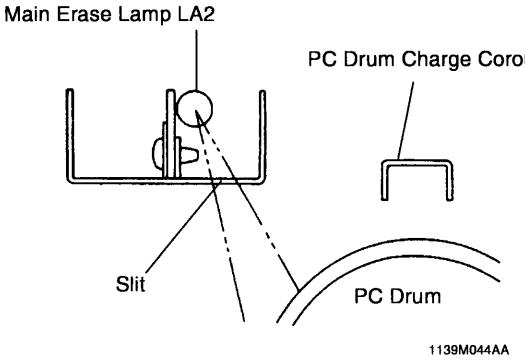

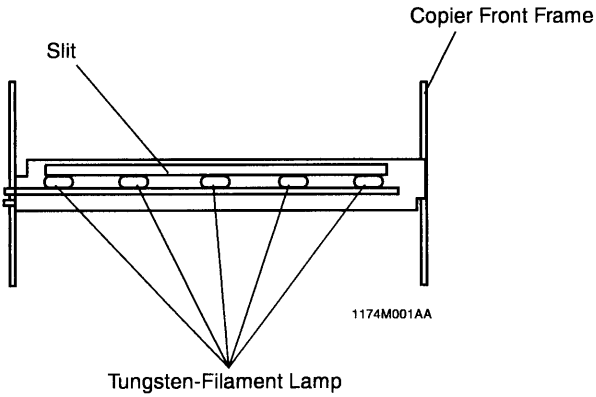

	CONTROL SIGNAL	ON	OFF	WIRING DIAGRAM
LA2	PWB-A PJ10A-10	L	H	1-E