17 TRANSPORT SECTION

- Rotation of the Suction Fan Motor results in the paper separated from the PC Drum being drawn onto the turning Suction Belts.
- The Suction Belts are driven by a motor.

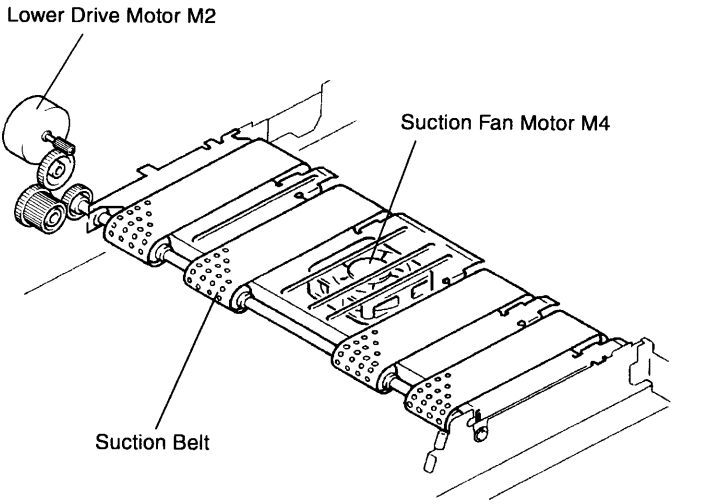

1177M027AB

	CONTROL SIGNAL	ON	OFF	WIRING DIAGRAM
M4	PWB-A PJ5A-8B	L	H	2-F