18 FUSING UNIT SECTION

The Fusing Unit fixes permanently the developed image to the paper by applying heat and pressure to the toner and paper.

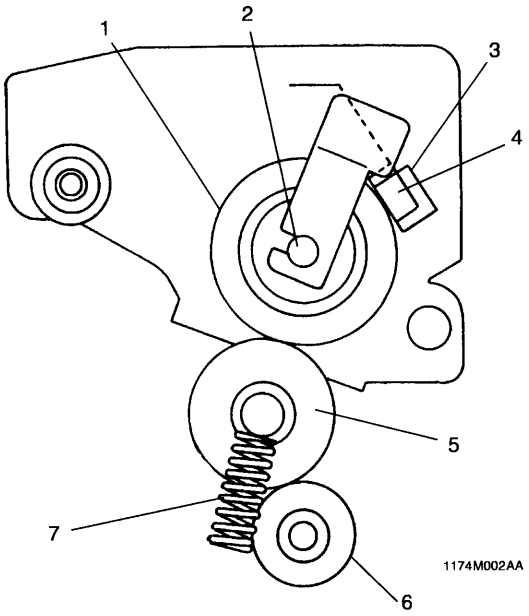

1. Upper Fusing Roller
2. Fusing Heater Lamp H1
3. Fusing Thermoswitch TS1
4. Thermistor TH1
5. Lower Fusing Roller
6. Cleaning Roller
7. Pressure Spring