18-1. Fusing Unit Drive Mechanism

The Fusing Unit is driven by a motor.

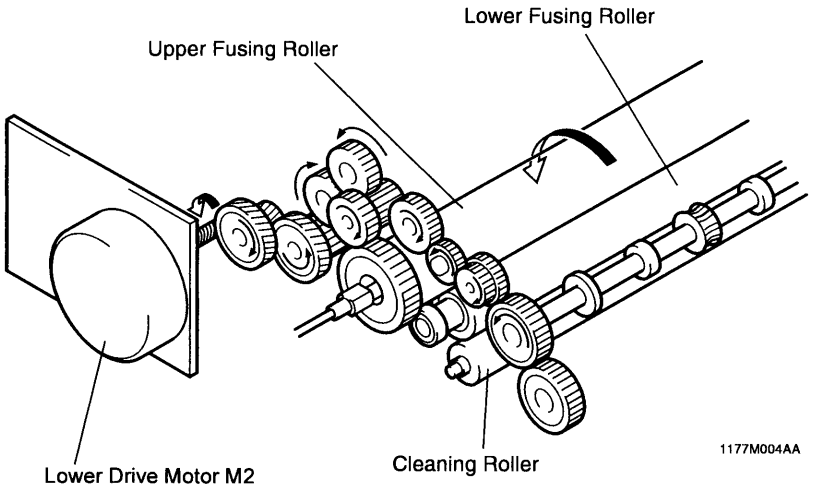

18-2. Fusing Rollers Pressure Mechanism

To provide pressure and ensure that there is a certain width of area of contact between the Upper and Lower Fusing Rollers, a pressure spring is used to press the Lower Fusing Roller up against the Upper Fusing Roller.

