UPPER PAPER TRAY UNIT

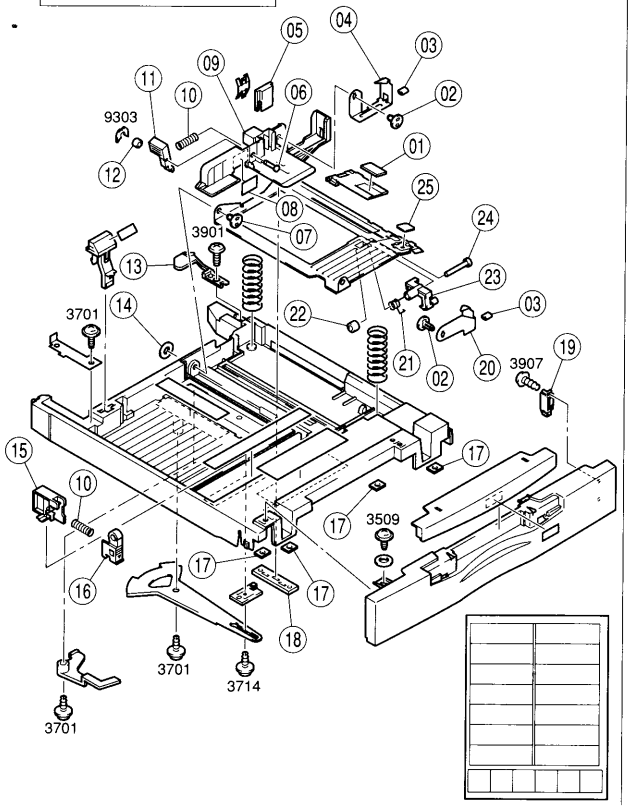

LOWER PAPER TRAY UNIT

