

1177D023AA

Cleaning of the Manual Bypass Take-Up Roll and Manual Bypass Feed Roll

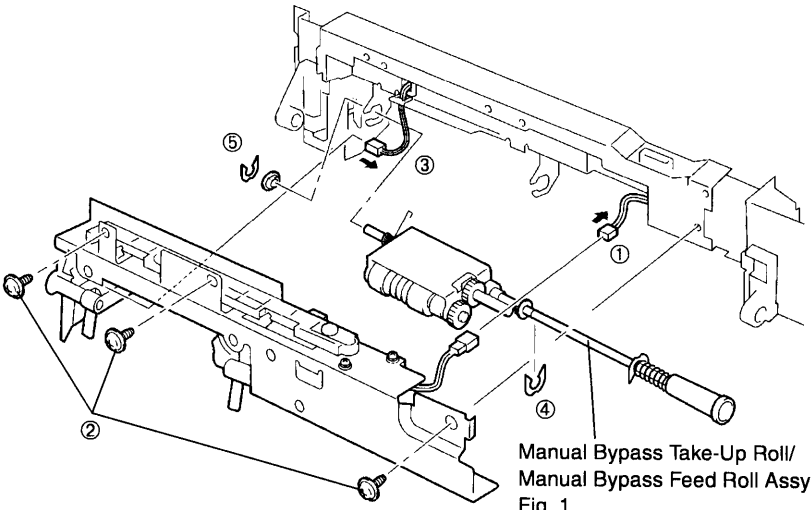

Fig. 1

1177D024AA

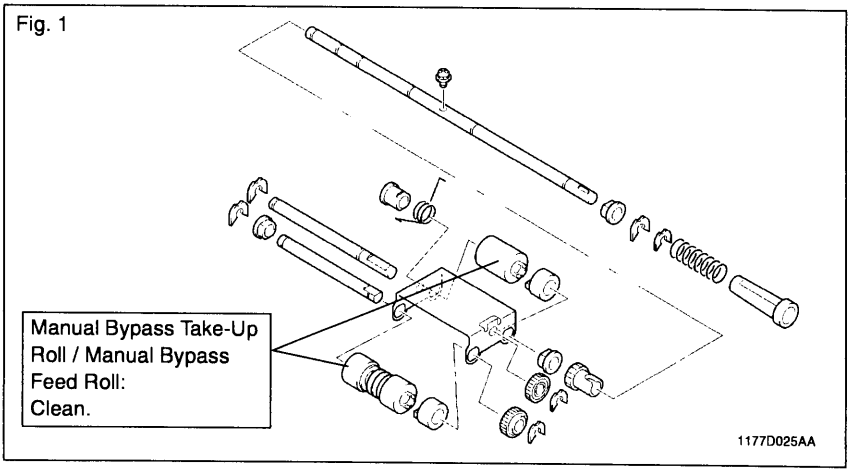

1177D025AA