(2) Replacement of the Cleaning Blade

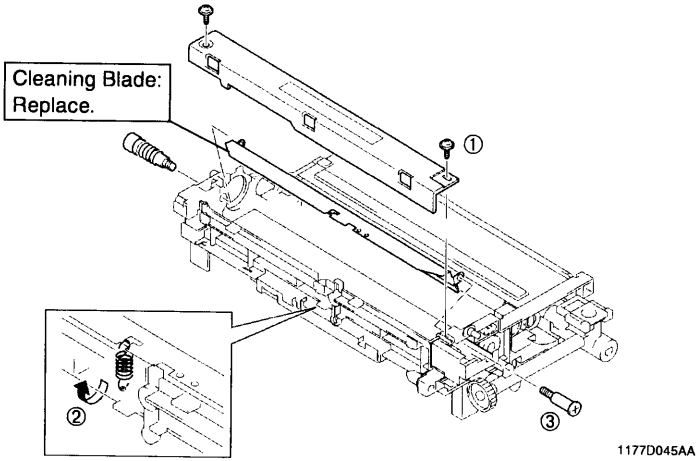

NOTE

When reinstalling the Cleaning Blade, do not forget to rehook the spring.

Applying Toner to Cleaning Blade

1. Apply toner to the entire surface of the Cleaning Blade.
   (Do not forget to coat the surfaces on both ends.)
2. Install the PC Drum.
3. Apply a thin coat of toner to the PC Drum.
4. Turn the PC Drum 1/2 turns backward, then turn it one complete turn forward.

(3) Cleaning of the Pre-Image Transfer Upper Guide Plate, Magnet Roller Lower Filter and Paper Dust Remover Replacement of the Toner Antispill Mylar

