(2) Multi Bypass Misfeed

Relevant Electrical Parts	
Manual Feed Empty Sensor PC31 Transport Roller Sensor PC51 Paper Leading Edge Sensor PC54 Manual Feed Paper Take-Up Solenoid SL51	Transport Roller Clutch CL2 Manual Feed Paper Take-Up Clutch CL51 Master Board PWB-A

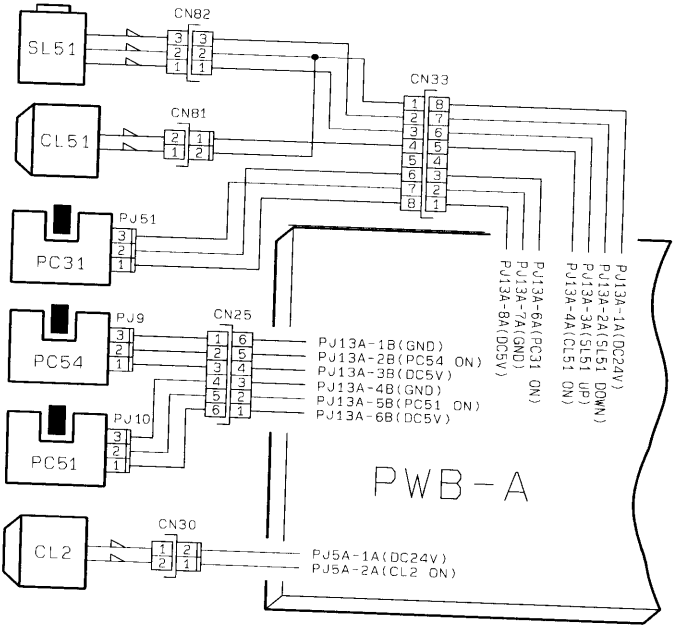

1177C02TAB

Multi Bypass Misfeed Clearing Procedure

- Paper is not detected.

Step	Check	Result	Action
1	Manual Feed Empty Sensor operation: the voltage across PJ13A-6A on the Master Board and GND is DC5V (sensor unblocked) and DC0V (sensor blocked).	YES	Change Master Board.
		NO	Correct actuator. Change sensor.