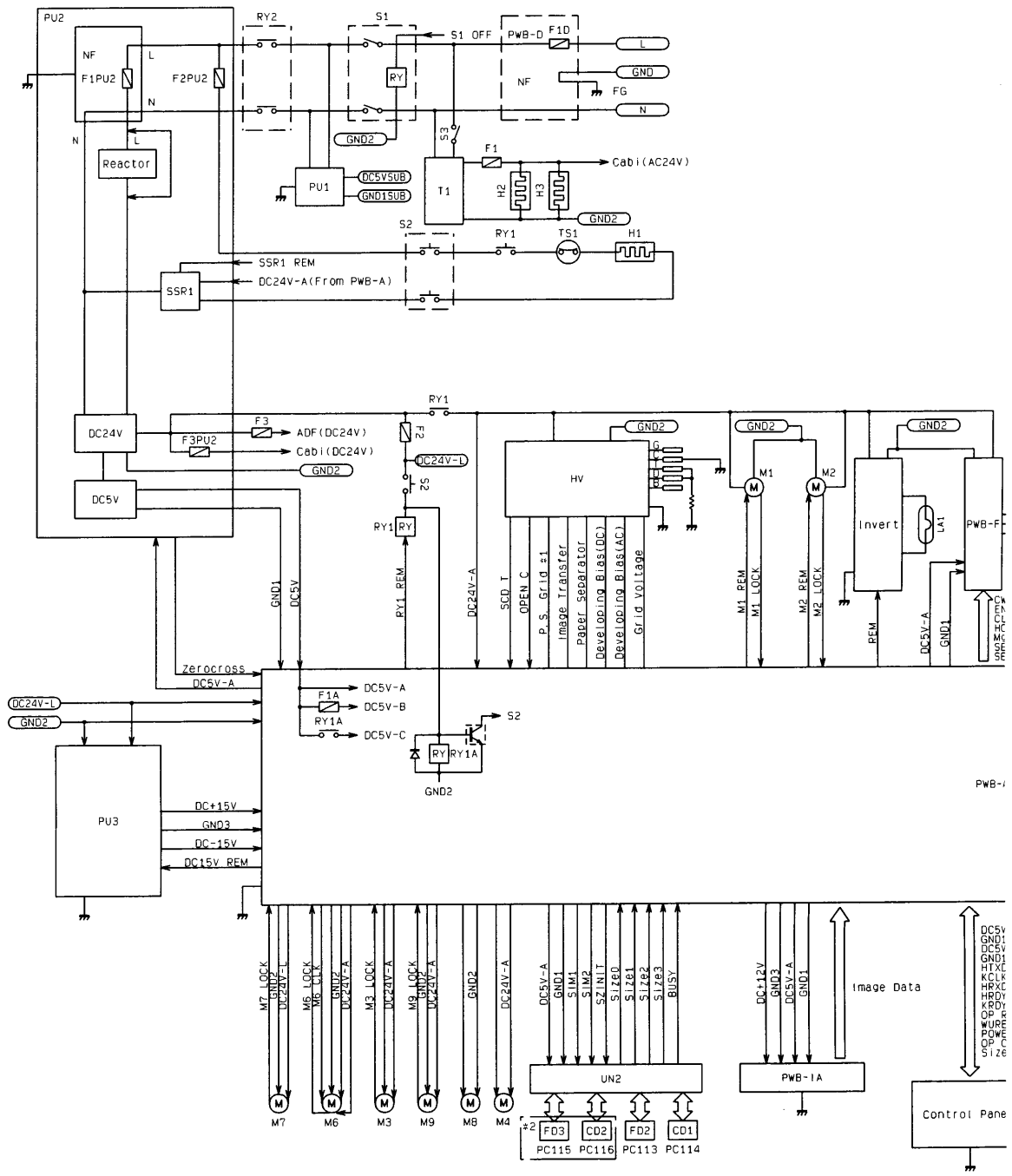

CL1	Synchronizing Roller Clutch
CL2	Transport Clutch
CL51	Manual Feed Paper Take-Up Clutch
CNT1	Total Counter
CNT3	Plug-In Counter
H1	Heater Lamp
H2	Drum Dehumidifying Heater
H3	Paper Dehumidifying Heater
HV	High Voltage Unit
LA1	Exposure Lamp
LA2	Main Erase Lamp
LD1	Laser Diode
M1	Upper Drive Motor
M2	Lower Drive Motor
M3	Optical Section Cooling Fan Motor
M4	Suction Fan Motor
M5	Scanner Motor
M6	Polygon Motor
M7	Power Supply Unit Cooling Fan Motor
M8	Toner Replenishing Motor
M9	Ventilation Fan Motor
PC31	Manual Feed Empty Sensor
PC51	Transport Roller Sensor

PC53	Paper Exit Sensor
PC54	Paper Leading Edge Sensor
PC55	1st Drawer Paper Take-Up Sens
PC56	2nd Drawer Paper Take-Up Sens
PC57	Right Door Set Sensor
PC69	2nd Drawer Set Sensor
PC81	Scanner Home Sensor
PC101	1st Drawer Paper Empty Sensor
PC102	2nd Drawer Paper Empty Sensor
PC111	Original Cover Detecting Sens
PC112	Toner Bottle Home Position S
PC113	Original Size Detecting Sens
PC114	Original Size Detecting Sens
PC115	Original Size Detecting Sens
PC116	Original Size Detecting Sens
PU1	DC Power Supply1
PU2	DC Power Supply2
PU3	DC Power Supply3
PWB-A	Master Board
PWB-B	LD Board
PWB-C	SOS Sensor Board
PWB-D	Noise Filter Board
PWB-F	SCP Board