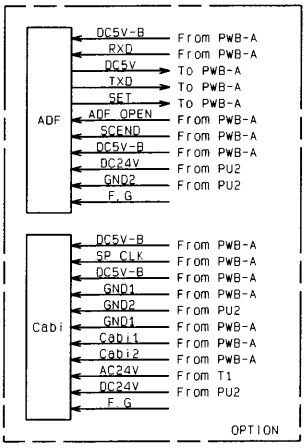

#1
P.S. :Paper Separator

#2
Mixed inch/metric Areas:Standard
Inch Areas and Metric Areas:OP

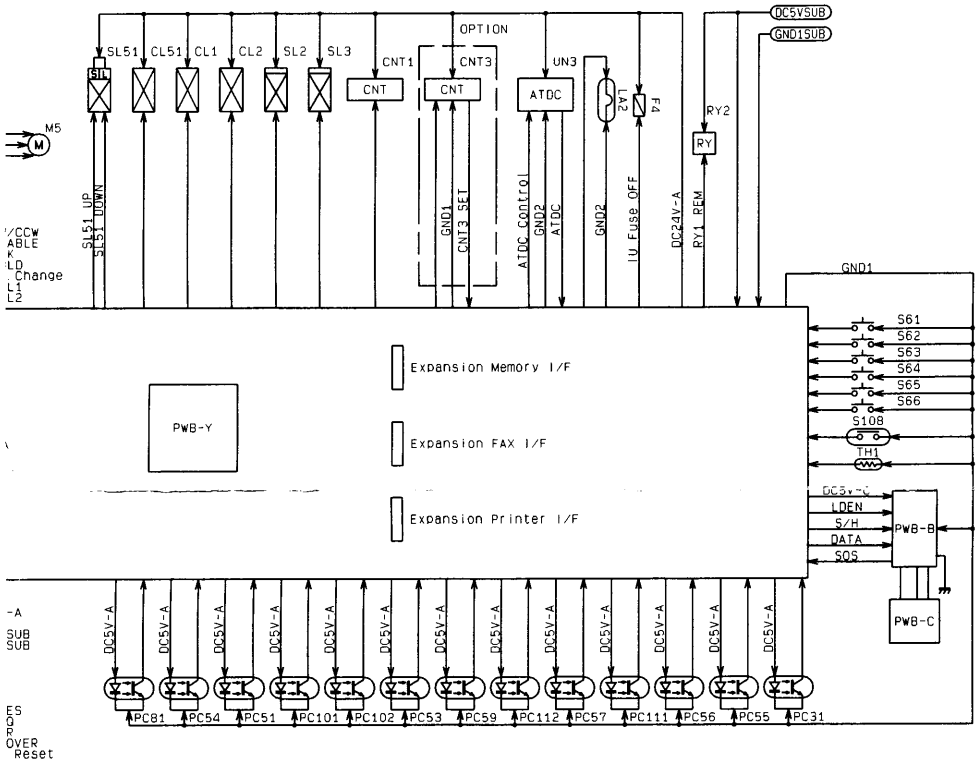

PWB-IA	CCD Sensor Board
PWB-Y	RAM Board
RY1	Main Relay
RY2	Sleep Mode Relay
S1	Power Switch
S2	Front Door Interlock Switch
S3	Dehumidifying Switch
S61	Paper Size Detecting Switch1
S62	Paper Size Detecting Switch2
S63	Paper Size Detecting Switch3
S64	Paper Size Detecting Switch4
S65	1st Drawer Set Switch
S66	Inch/Metric Switch
S108	Size Reset Switch
SL2	1st Drawer Paper Take-Up Solenoid
SL3	2nd Drawer Paper Take-Up Solenoid
SL51	Manual Feed Paper Take-Up Solenoid
T1	Power Transformer
TH1	Thermistor
TS1	Fusing Thermoswitch
UN2	Original Size Detecting Board
UN3	ATDC Sensor

DWG. NO	1177-B101-0A
TITLE	CIRCUIT DIAGRAM
MODEL	Di181
VOLTAGE	AC100/115/120/127/ 200/220/240V
EFFECTIVE MACHINE NO.	XX0101 AND ONWARD
DATE ISSUED	Aug. 1999