ELECTRICAL PARTS LAYOUT

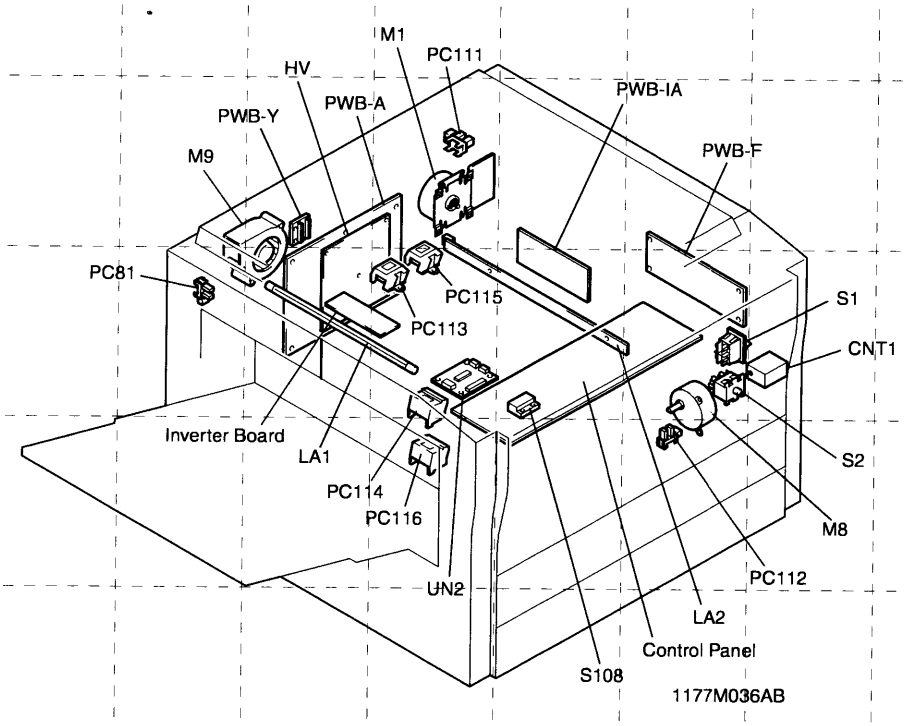

TRANSPORT UNIT

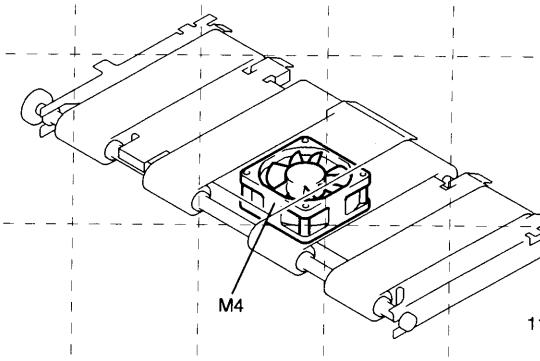

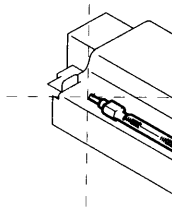

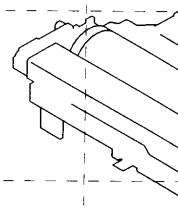

MANUAL FEED UNIT

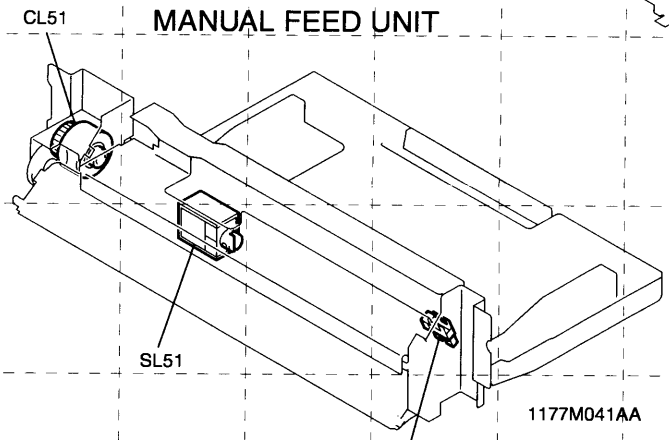

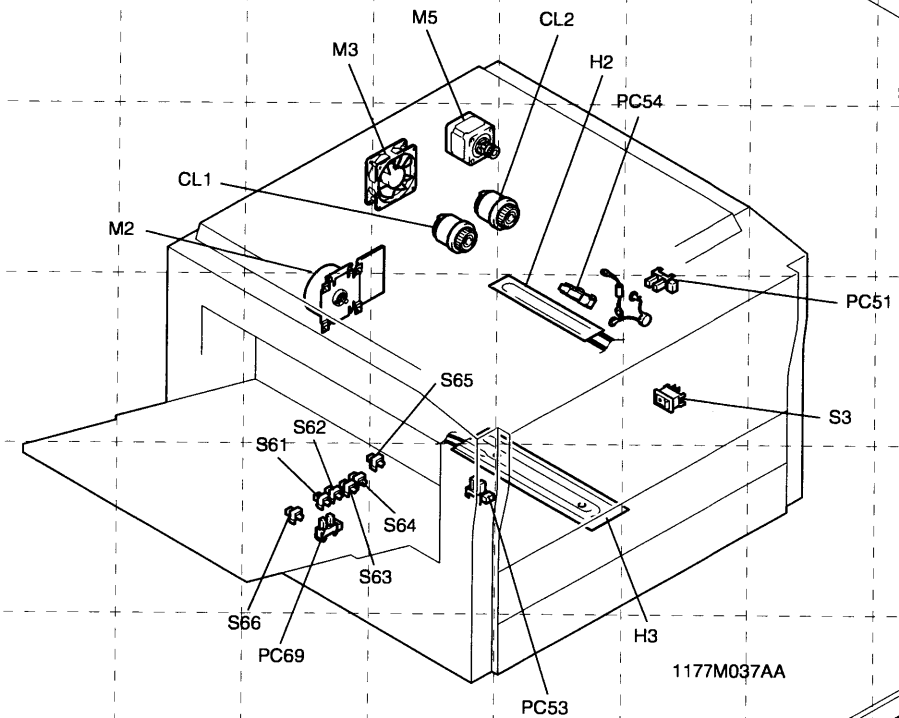

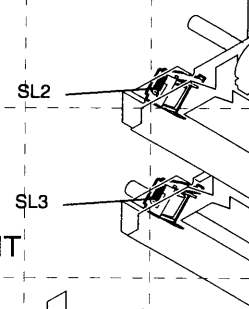

POWER SUPPLY UNIT

