13 14 15

JSING UNIT

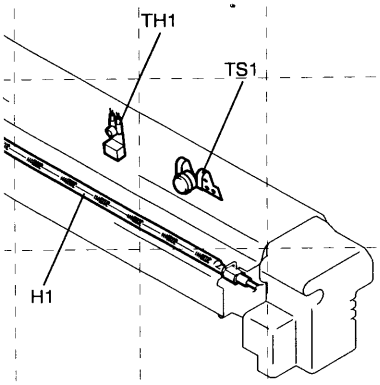

1177M038AA

M039AA

IMAGING UNIT

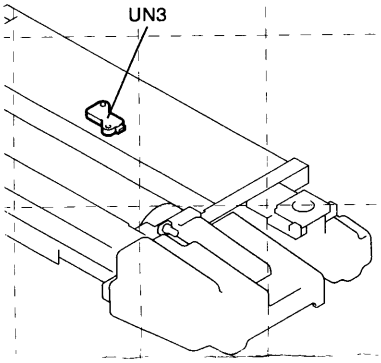

1177M040AA

PAPER TAKE-UP UNIT

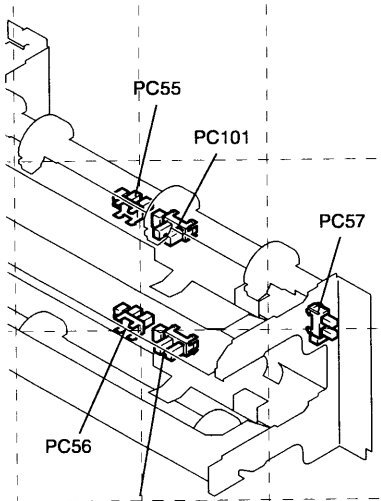

1177M042AA

SYMBOL	PART NAME	LOCATION	GRID
CL1	Synchronizing Roller Clutch	4-H	2-F
CL2	Transport Roller Clutch	4-H	2-F
CL51	Manual Feed Paper Take-Up Clutch	7-F	11-I
CNT1	Total Counter	7-C	18-B
CNT3	Plug-In Counter	——	18-C
H1	Heater Lamp	13-B	2-B
H2	Drum Dehumidifying Heater	5-I	1-D
H3	Paper Dehumidifying Heater	5-J	11-G
HV	High Voltage Unit	3-C	2-H
LA1	Exposure Lamp	3-C	12-C
LA2	Main Erase Lamp	5-C	1-E
M1	Upper Drive Motor	4-B	2-C
M2	Lower Drive Motor	3-I	18-B
M3	Optical Section Cooling Fan Motor	4-H	5-A
M4	Suction Fan Motor	10-C	2-F
M5	Scanner Motor	4-H	15-B
M7	Power Supply Unit Cooling Fan Motor	10-K	14-I
M8	Toner Replenishing Motor	6-C	2-C
M9	Ventilation Fan Motor	3-C	11-A
PC31	Manual Feed Empty Sensor	10-G	11-I
PC51	Transport Roller Sensor	6-I	2-I
PC53	Paper Exit Sensor	4-J	2-A
PC54	Paper Leading Edge Sensor	5-I	2-I
PC55	1st Drawer PaperTake-Up Sensor	13-I	11-E
PC56	2nd Drawer PaperTake-Up Sensor	13-I	11-F
PC57	Right Door Set Sensor	15-I	18-A
PC69	2nd Drawer Set Sensor	3-J	11-D
PC81	Scanner Home Sensor	2-C	12-A
PC101	1st Drawer Paper Empty Sensor	14-I	11-E
PC102	2nd Drawer Paper Empty Sensor	14-J	11-F
PC111	Original Cover Detecting Sensor	4-B	11-A
PC112	Toner Bottle Home Position Sensor	6-D	2-C
PC113	Original Size Detecting Sensor FD2	4-C	6-C
PC114	Original Size Detecting Sensor CD1	4-C	7-C
PC115 *1	Original Size Detecting Sensor FD3	4-C	7-B
PC116 *1	Original Size Detecting Sensor CD2	4-D	7-A
PU1	DC Power Supply 1	10-K	16-D
PU2	DC Power Supply 2	11-K	14-E
PU3	DC Power Supply 3	11-K	14-G
PWB-A	Master Board	3-C	6-F
PWB-D	Noise Filter Board	8-K	15-H
PWB-F	SCP Board	6-C	14-B
PWB-IA	CCD Sensor Board	5-C	12-B
PWB-Y	RAM Board	3-B	6-E
RY1	Main Relay	9-K	15-F
RY2	Sleep Mode Relay	9-K	15-E
S1	Power Switch	6-C	18-D

SYMBOL	PART NAME	LOCATION	GRID
S2	Front Door Interlock Switch	6-C	18-A
S3	Dehumidifying Switch	6-I	11-G
S61	Paper Size Detecting Switch 1	3-J	11-B
S62	Paper Size Detecting Switch 2	3-J	11-B
S63	Paper Size Detecting Switch 3	3-J	11-B
S64	Paper Size Detecting Switch 4	3-J	11-C
S65	Paper Size Detecting Switch 5	4-J	11-C
S66	Inch/Metric Switch	3-J	11-D
S108	Size Reset Switch	5-C	8-B
SL2	1st Drawer PaperTake-Up Solenoid	12-H	11-E
SL3	2nd Drawer PaperTake-Up Solenoid	12-I	11-F
SL51	Manual Feed Paper Take-Up Solenoid	8-G	11-H
T1	Power Transformer	9-K	14-I
TH1	Thermistor	13-B	2-A
TS1	Fusing Thermoswitch	14-B	2-B
UN2	Original Size Detecting Board	4-C	6-B
UN3	ATDC Sensor	13-E	1-D
——	Inverter Board	3-C	12-C
——	Control Panel	5-C	9-A

*1: Mixed inch/metric Areas: Standard
Inch Areas and Metric Areas: Op