CONNECTORS LAYOUT

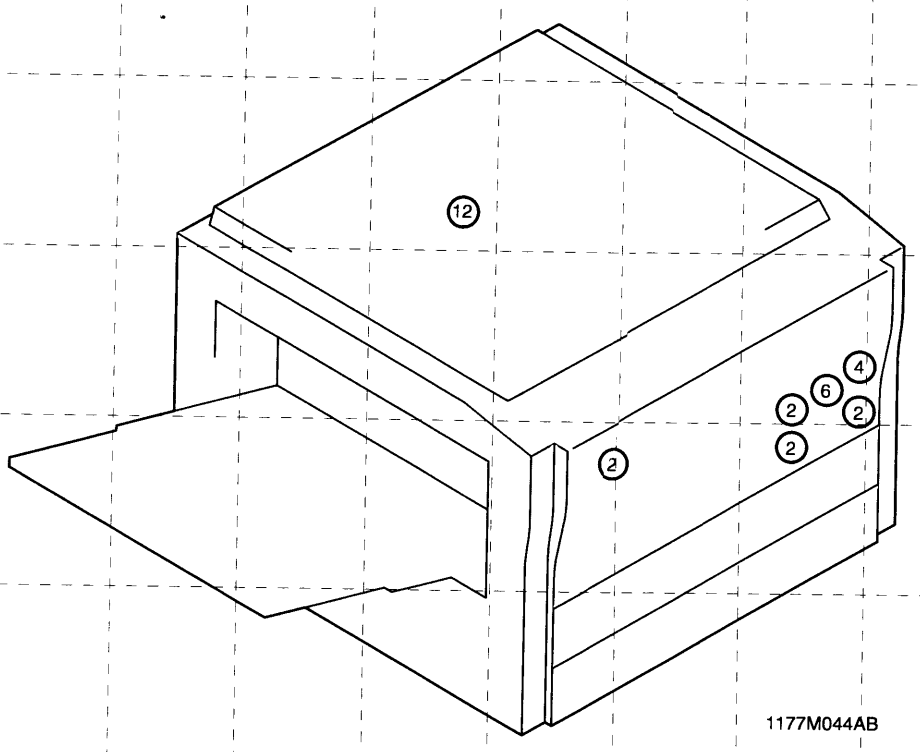

1177M044AB

TRANSPORT UNIT

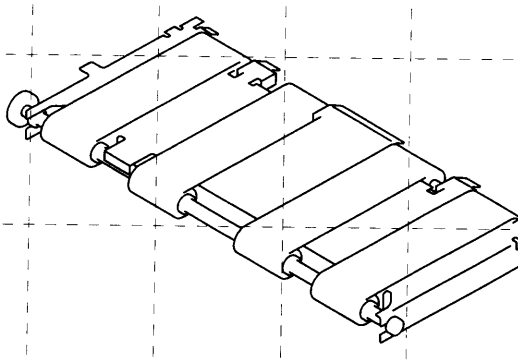

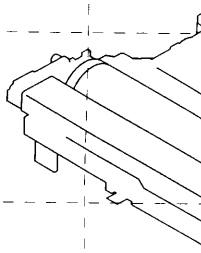

MANUAL FEED UNIT

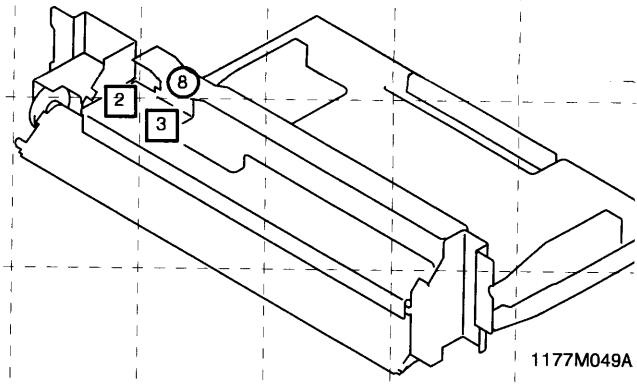

1177M049A

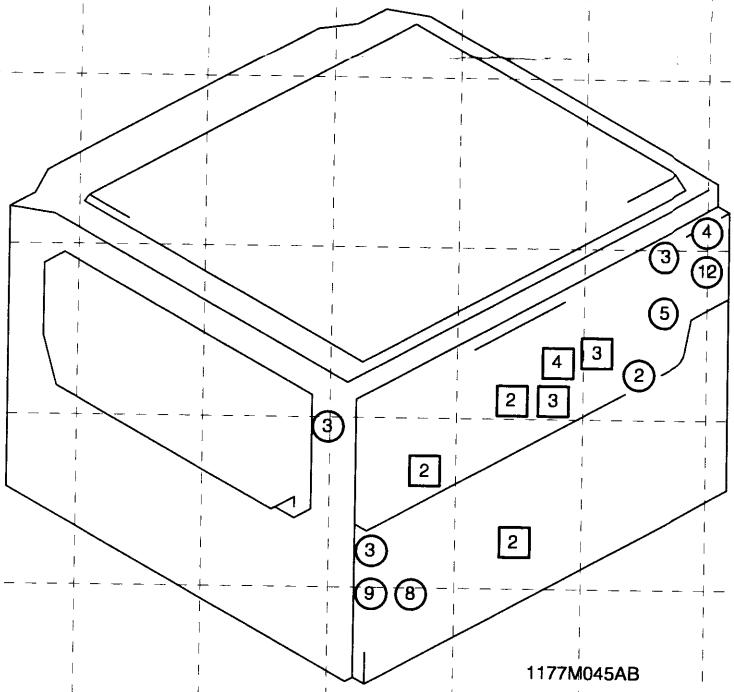

1177M045AB

POWER SUPPLY UNIT

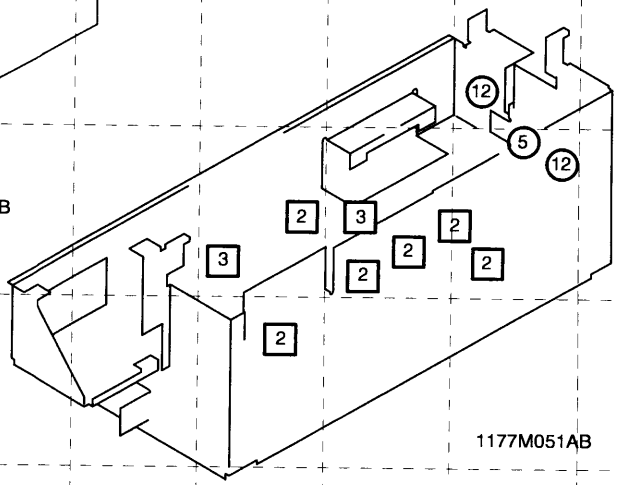

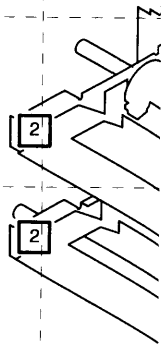

1177M051AB

Description

Number of Pin → ① Possible to confirm by removing external cover.

↘ [1] Not possible to confirm by removing external cover.