Di250

PARTS MANUAL

MINOLTA

AREA CHART

AREA No.	AREA	(JAPAN)	AREA No.	AREA	(JAPAN)
0400	METRIC		2300	INCH	
0702	EXCEPT USA/CANADA		2704	USA/CANADA	
0703	EXCEPT EUROPE		2706	EUROPE	
0710	EXCEPT USA/CANADA/EUROPE		2720	USA/CANADA/EUROPE	

We recommend that you cross out from your Parts Manuals those parts numbers which do not apply your area so that no error is made when ordering parts.

CONTENTS

1. HOUSING (A) ••••••

GESTION DES MODIFICATIONS DU MANUEL PIECES DETACHEES DI250

Page à remplacer	Nature de la modification	Nouvelle numérotation
Page 1	Ajout des index 29, 32, 33, 34 sur figure	Page 1 REV 1
Page 2	Ajout des index 32*BA, 33AA, 33BA, 34AA	Page 2 REV 1
Page 5	Ajout des index 27, 28, 29, 30, 31, 32, 33, 34, 35 sur figure	Page 5 REV 1
Page 6	Modification index 13AA, et ajout des index 27AA, 28AA, 29AA, 30,AA, 31AA, 32AA, 33AA, 34AA et 35AA	Page 6 REV 1
Page 8	Modification de l'index 20AA et ajout de l'index 34AA	Page 8 REV 1
Page 14	Modification index 47AA	Page 14 REV 1
Page 22	Modification index 06AA	Page 22 REV 1

GESTION DES MODIFICATIONS DU MANUEL PIECES DETACHEES DI250		
Page à remplacer	Nature de la modification	Nouvelle numérotation

PREFACE

1. The part numbers listed in Parts Manual are those which were assigned to the parts making up the machine at the time machine was originally introduced onto the market.

2. Parts whose numbers are preceded by an asterisk in the Index Column on the List Page are parts to be used in only certain market areas. Therefore, please check the number in the Area cloumn on the List Page and then compare it with the numbers given in the Area Chart on page II to find out which part number is applicable to your own ares.

   NOTE: Parts for only certain Market Areas: The part numbers for these parts vary according to market area. In other cases, these parts are used in only restricted areas.

3. The Index Number on the List Page is composed of two numbers and two letters. Generally, only A is used as the first letter of the two letters. However, sometimes B, C, D, etc. are used when one part in the illustration, such as an electrical parts or a part which varies according to market areas, has two or more part numbers. The second of the two letters represents the modification history of that part.

4. The Areas Number is listed in the Areas Column for only those parts used in certain market areas. This Area Number represents the areas listed opposite to It in the Chart given on Page II. Parts having no Area Number listed in the Area Column can be used in all market areas.

5. In the exploded views in this Parts Manual the parts (Screws & Washes, etc...) which are indicated with a "four-digit" numbers are listed in numerical order in the section "SCREWS AND WASHERS". Please check these "four-digit" numbers with the part numbers ("ten-digit" numbers) which should be used for ordering the part.

6. All part numbers consist of "ten-digit" which should all be quoted when ordering a part. The price of parts can be obtained by referring to the "Parts Price List" which is separately issued.

7. All infomation contained in this parts manual is subject to change.

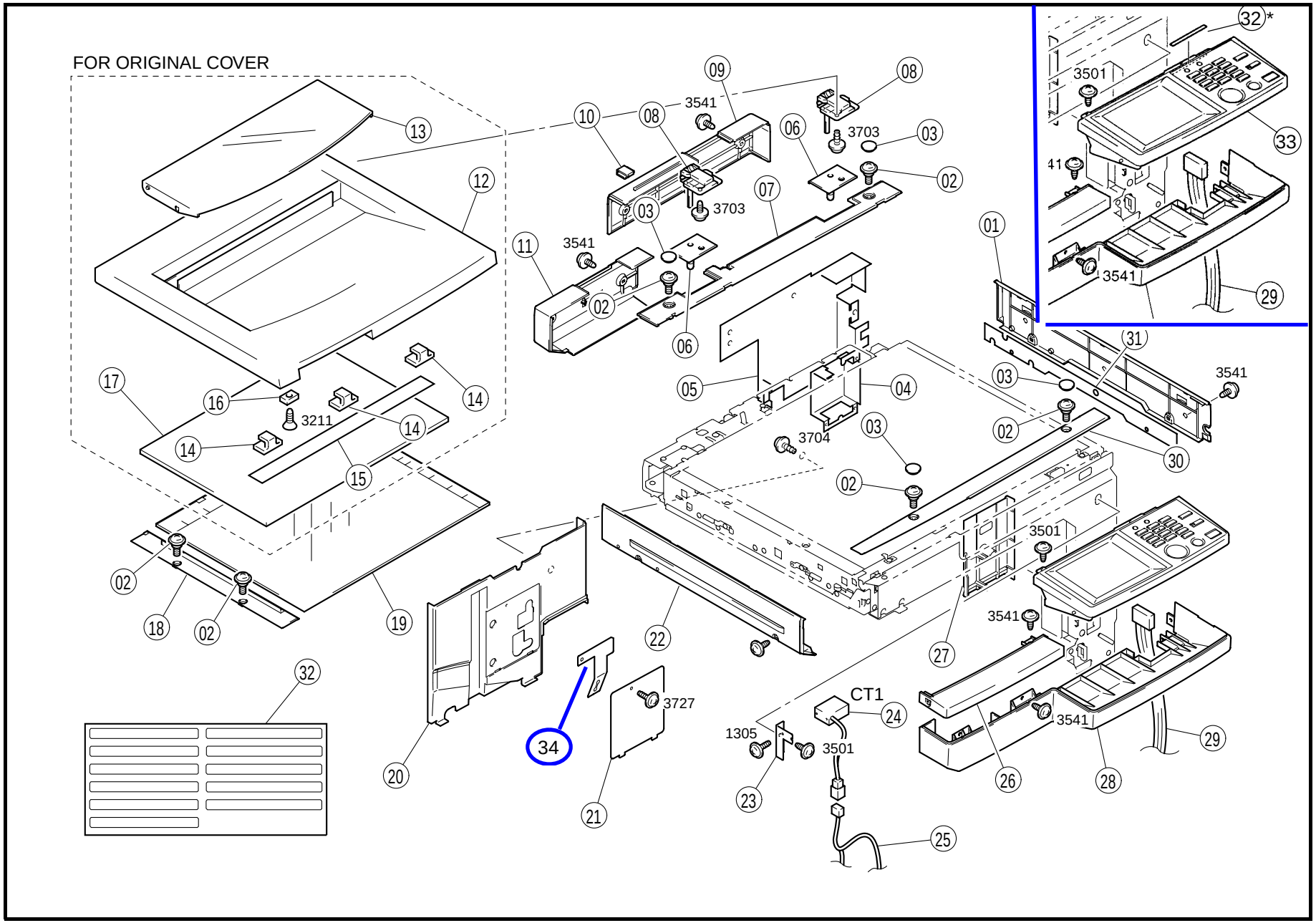
FOR ORIGINAL COVER
3541
3703
3703
3541
3211
3704
3501
3541
3727
CT1
1305
3501
3541
3501
3541
34
01
02
03
04
05
06
07
08
09
10
11
12
13
14
15
16
17
18
19
20
21
22
23
24
25
26
27
28
29
30
31
32
32*
33
41

INDEX	PART NO.	PART NAME	QTY	AREA	REMARKS
01AA	1171-1201-01	COVER	1		
02AA	1171-2414-01	SCREW	6		
03AA	1171-1321-01	CAP	4		
*04AA	1171-2417-01	SHIELD	1	2704	
*05AA	1171-2418-01	SHIELD	1	2704	
06AA	1171-1122-01	COVER	2		
07AA	1171-1206-01	SUPPORT PLATE	1		
08AA	1139-1705-01	HINGE	2		
09AA	1171-1203-01	REAR COVER	1		
10AA	1171-1209-01	LID	1		
11AA	1171-1204-01	REAR COVER	1		
12AA	1171-1125-01	ORIGINAL COVER	1		
13AA	1171-1126-01	ORIGINAL HOLDER	1		
14AA	1139-1703-02	SLIDER	3		
15AA	1139-1706-01	POLYESTER FILM	1		
16AA	9326-2820-11	MAGNET	1		
17AA	1139-1704-14	PAD	1		
18AA	1166-1144-01	WIDTH GLASS FOR AF-6	1		
18BA	1171-1318-01	GUIDE	1		
*19AA	1166-1147-01	ORIGINAL GLASS FOR AF-6	1	2300	
*19BA	1166-1148-01	ORIGINAL GLASS FOR AF-6	1	0400	
*19CA	1171-0167-02	ORIGINAL GLASS	1	2300	
*19DA	1171-0168-02	ORIGINAL GLASS	1	0400	
20AA	1171-1208-01	COVER	1		
21AA	1171-1210-01	COVER	1		
22AA	1171-1202-01	COVER	1		
23AA	1164-2122-01	BRACKET	1		
24AA	9323-1410-11	COUNTER TOTAL (CT1)	1		
25AA	1164-6815-01	HARNESS	1		
26AA	1164-1128-01	FRONT COVER	1		
27AA	1171-1207-01	COVER	1		
28AA	1164-1121-01	FRONT COVER	1		
29AA	1171-6806-01	HARNESS	1		
30AA	1171-1205-01	SUPPORT PLATE	1		
31AA	1171-1212-02	SHEET	1		
*32AA	1171-7362-01	LABEL CONTROL PANEL	1	2706	
33AA	**1171-6006-01**	**CONTROL PANEL**	**1**	**2300**	
33BA	**1171-6007-02**	**CONTROL PANEL**	**1**	**2400**	
34AA	**1171-1215-01**	**SHIELD**	**1**		

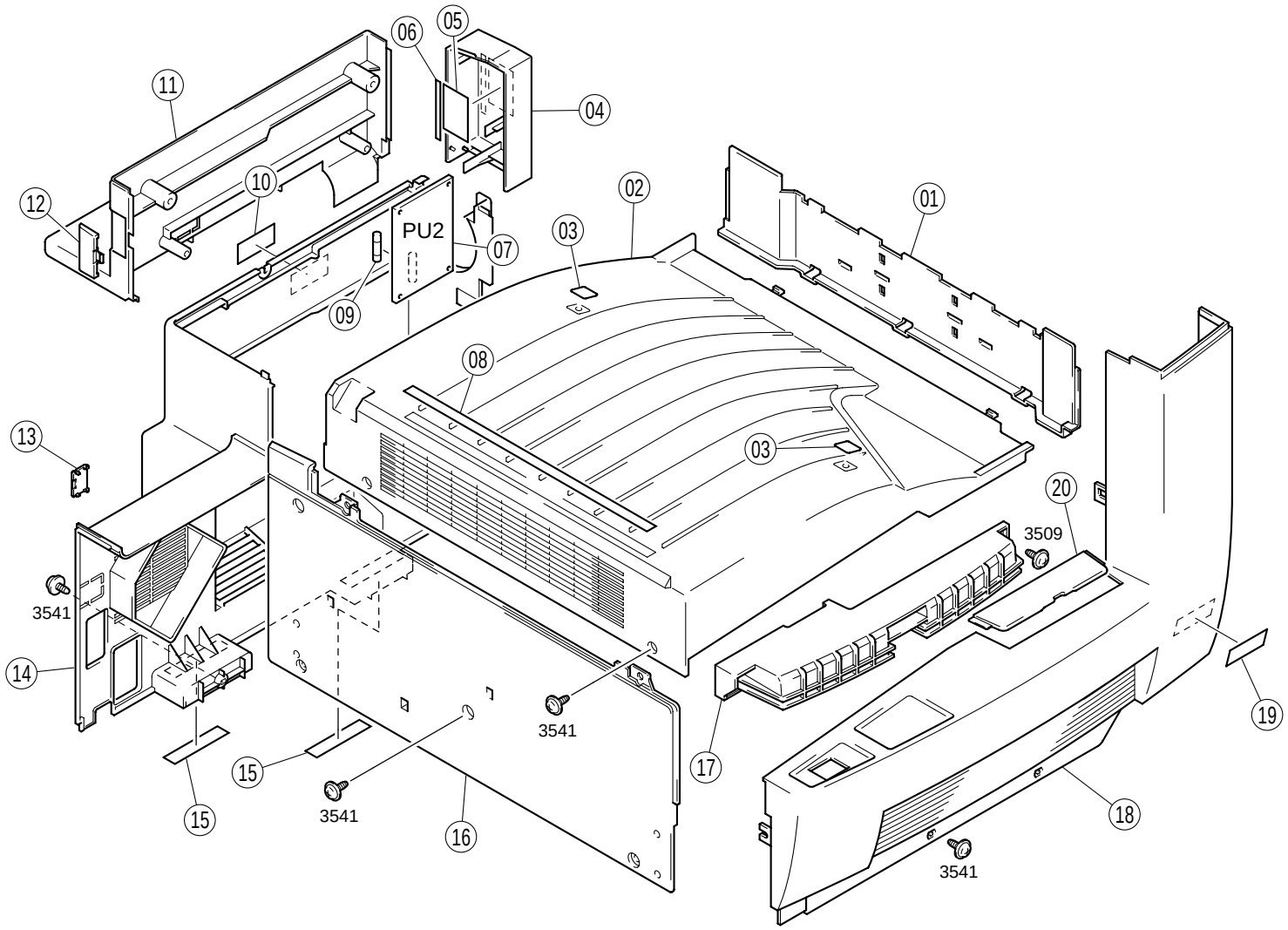
06
05
11
04
10
12
PU2
07
02
01
03
09
08
13
03
20
3509
3541
14
3541
19
15
17
15
3541
16
18
3541

INDEX	PART NO.	PART NAME	QTY	AREA	REMARKS	INDEX	PART NO.	PART NAME	QTY	AREA	REMARKS
01AA	1164-1012-02	COVER	1								
02AA	1164-1102-02	TOP COVER	1								
03AA	1164-1032-01	SEAL	2								
04AA	1165-1009-01	COVER	1								
05AA	1165-7312-02	LABEL TONER BOTTLE	1								
*06AA	1171-7314-01	LABEL TONER BOTTLE	1	0703							
*06BA	1171-7315-01	LABEL TONER	1	2706							
07AA	9325-2710-62	PWB-PU (PU2)	1								
08AA	1164-1035-01	SEAL	1								
09AA	1165-7802-01	FUSE 5A	1								
*10AA	0818-7319-01	LABEL CAUTION	1	2706							
11AA	1165-1113-03	COVER	1								
12AA	1164-2204-02	COVER	1								
13AA	1164-1036-01	COVER	1								
14AA	1165-1011-02	REAR COVER	1								
15AA	1164-1031-01	SEAL	2								
16AA	1164-2022-06	RAIL	1								
17AA	1164-1117-01	HANDLE	1								
*18AA	1171-1131-01	FRONT COVER	1	2704							
*18BA	1164-1133-01	FRONT COVER	1	0702							
19AA	1164-7325-01	LABEL	1								
20AA	1164-1015-02	COVER	1								

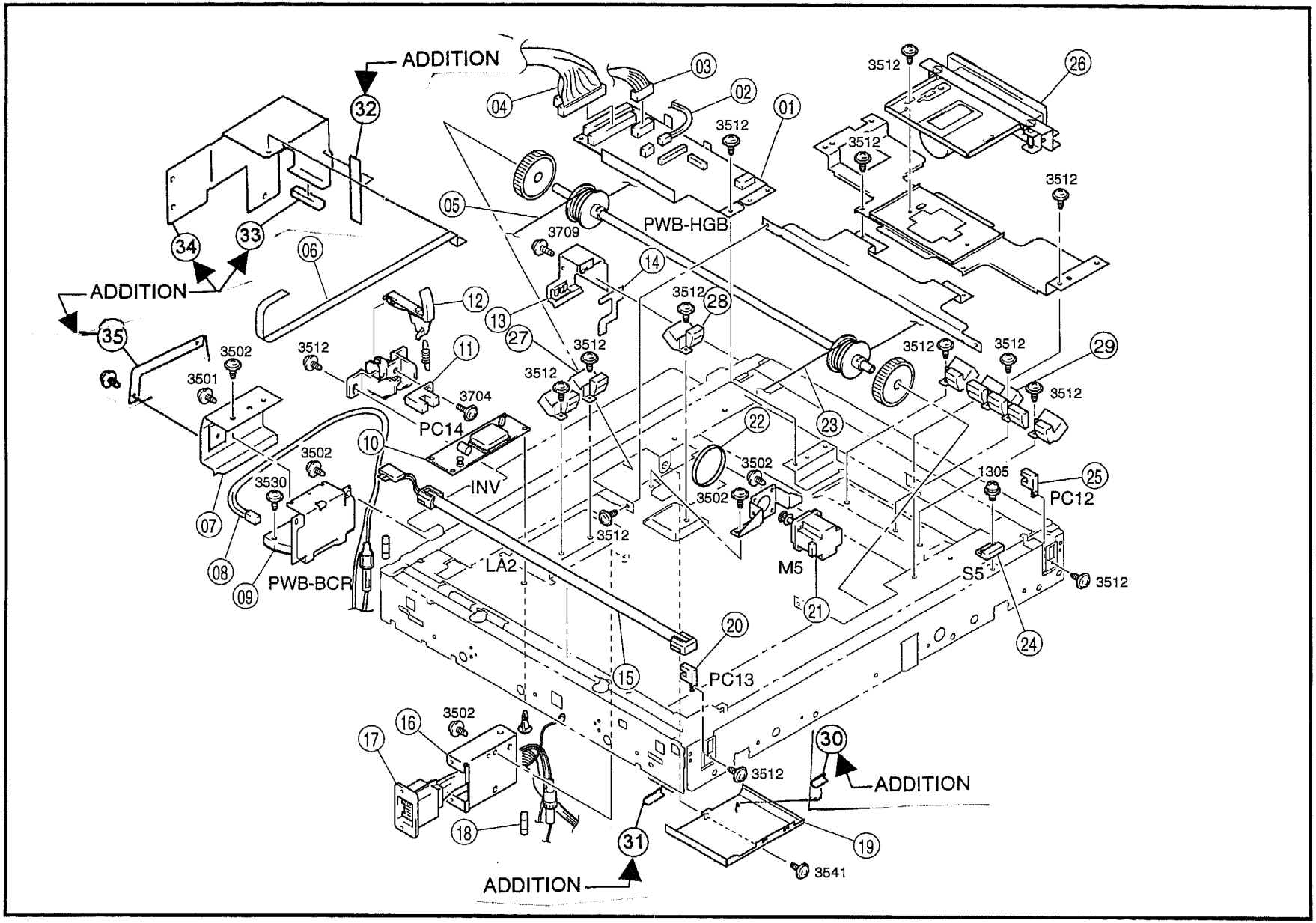
ADDITION
ADDITION
ADDITION
ADDITION
PWB-HGB
PC14
INV
PWB-BCR
LA2
M5
S5
PC12
PC13
3512
3709
3502
3501
3704
3530
1305
3541
01
02
03
04
05
06
07
08
09
10
11
12
13
14
15
16
17
18
19
20
21
22
23
24
25
26
27
28
29
30
31
32
33
34
35

INDEX	PART NO.	PART NAME			QTY	AREA	REMARKS	INDEX	PART NO.	PART NAME	QTY	AREA	REMARKS
*01AA	1166-1151-01	MFB BOARD		(PWB-HGB)	1	2704							
*01BA	1166-1157-01	HGB BOARD		(PWB-HGB)	1	0702							
02AA	1166-1145-01	HARNESS			1								
03AA	1166-1142-01	HARNESS			1								
04AA	1171-6805-01	HARNESS			1								
05AA	1166-1082-01	WIRE			1								
06AA	1166-1098-01	HARNESS			1								
07AA	1171-2412-01	SHIELD			1								
08AA	1171-6808-01	HARNESS			1								
09AA	1166-1020-02	BCR BOARD		(PWB-BCR)	1								
10AA	1166-1097-01	PWB-INVERTER		(INV)	1								
11AA	1166-1102-01	PHOTO INTERRUPTER	COVER	(PC14)	1								
12AA	1166-1067-01	ACTUATOR			1								
13AA	1171-2410-01	BRACKET			1	**2300**							
14AA	1171-2415-01	GUIDE			1	**2300**							
15AA	1166-1005-01	TUBE LAMP		(LA2)	1								
16AA	1164-2203-01	BRACKET			1								
*17AA	1171-6802-01	HARNESS			1	2704							
*17BA	1171-6807-01	HARNESS			1	0702							
18AA	9346-3320-61	FUSE 3.15A			1								
19AA	1171-2413-01	COVER			1								
20AA	1166-1101-01	PHOTO INTERRUPTER	SCANNER	(PC13)	1								
21AA	1166-1115-01	MOTOR	SCANNER	(M5)	1								
22AA	1166-1083-01	TIMING BELT			1								
23AA	1166-1081-01	WIRE			1								
24AA	1166-1103-01	REED SWITCH	SIZE RESE	(S5)	1								
25AA	1166-1100-01	PHOTO INTERRUPTER	SCANNER	(PC12)	1								
26AA	1166-1007-01	CCD ASSY			1								
27AA	**1166-1110-01**	**PHOTO INTERRUPTER**	**(UN7)**		**1**	**0000**							
28AA	**1166-1110-01**	**PHOTO INTERRUPTER**	**(UN9)**		**1**	**0400**							
29AA	**1166-1111-01**	**PHOTO INTERRUPTER**	**(UN5)**		**1**	**0000**							
30AA	**1171-2419-01**	**SHIELD**			**1**	**0400**							
31AA	**1171-2427-01**	**SHIELD**			**1**	**0400**							
32AA	**1171-2424-01**	**SHIELD**			**1**	**0400**							
33AA	**1171-2425-01**	**SHIELD**			**1**	**0400**							
34AA	**1171-0673-01**	**COVER**			**1**	**0400**							
35AA	**1171-2422-01**	**SHIELD**			**1**	**0400**							

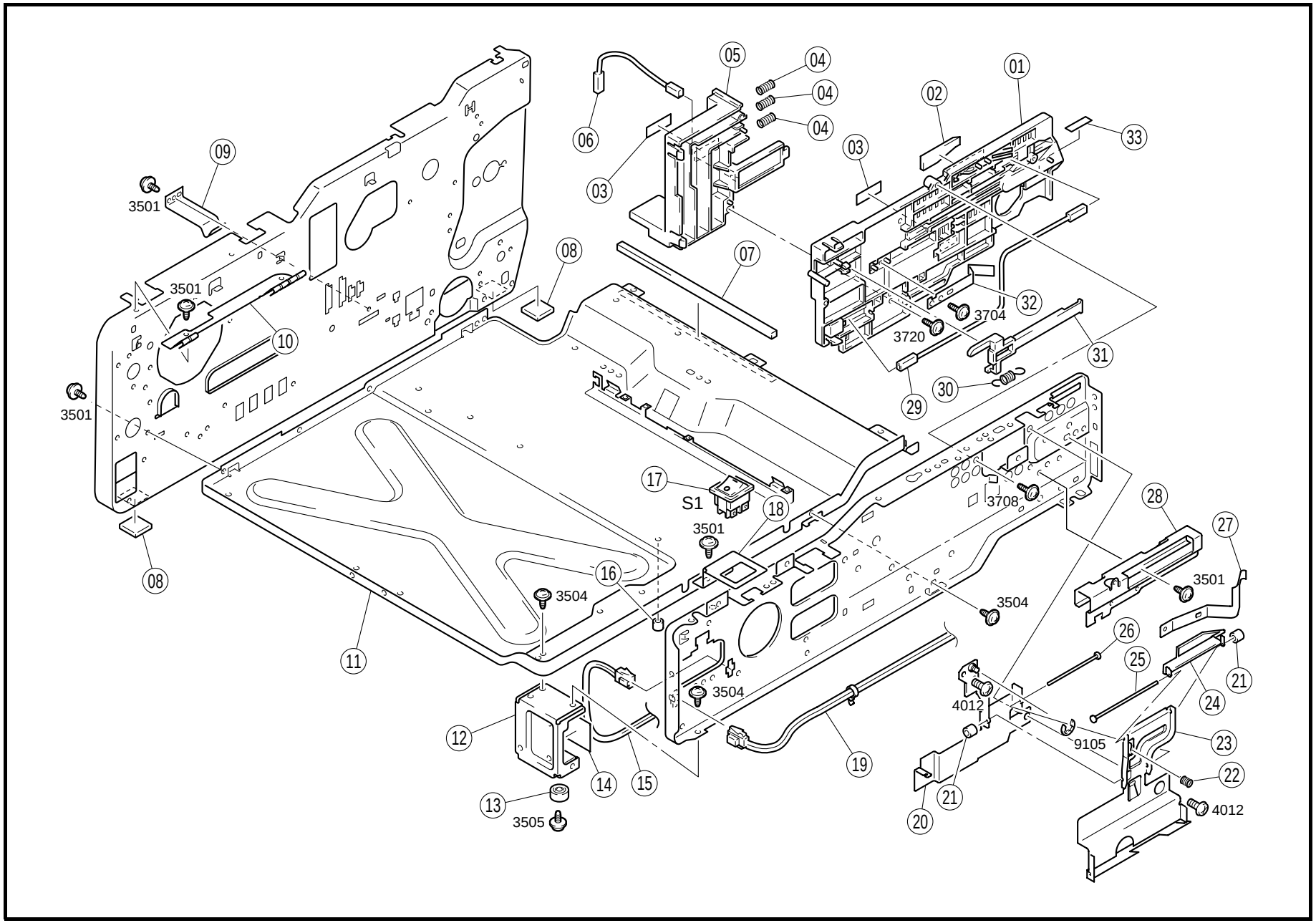
01
02
03
04
05
06
07
08
09
10
11
12
13
14
15
16
17
18
19
20
21
22
23
24
25
26
27
28
29
30
31
32
33
S1
3501
3504
3505
3704
3708
3720
4012
9105

INDEX	PART NO.	PART NAME	QTY	AREA	REMARKS
01AA	1165-0752-01	HOLDER ASSY	1		
02AA	1164-2314-01	SPACER	1		
03AA	1129-7303-01	LABEL HIGH VOLTAGE	2		
04AA	1400-1122-04	PRESSURE SPRING	3		
05AA	1165-0751-01	HOLDER ASSY	1		
06AA	1165-6803-01	HARNESS	1		
07AA	1165-2703-01	SEAL	1		
08AA	4156-3826-01	RUBBER FOOT	2		
09AA	1164-3054-01	PLATE SPRING	1		
∗10AA	1171-2131-01	GROUND PLATE	1	0702	
11AA	1165-2081-05	BASE FRAME	1		
12AA	1164-2024-03	FRAME	1		
13AA	0996-3055-01	RUBBER FOOT	1		
14AA	1164-3069-01	SPACER	1		
∗15AA	1165-6832-01	HARNESS	1	0710	
16AA	1200-2105-05	COLLAR	1		
17AA	9332-5710-21	SWITCH MAIN SW (S1)	1		
18AA	1164-2150-02	BRACKET	1		
19AA	1164-6803-01	HARNESS	1		
20AA	**1164-2301-02**	BRACKET	1		
21AA	1200-2105-06	RETAINING RING	2		
22AA	1164-2306-02	PRESSURE SPRING	1		
23AA	1164-2302-02	STOPPER	1		
24AA	1164-2308-02	DETECTING PLATE	1		
25AA	1200-5213-04	SHAFT	1		
26AA	1200-5212-04	PIN	1		
27AA	1164-2315-01	PLATE SPRING	1		
28AA	1164-2310-01	GUIDE PLATE	1		
29AA	1165-6809-01	HARNESS	1		
30AA	1164-2039-01	TENSION SPRING	1		
31AA	1165-2040-02	LEVER	1		
32AA	1164-2021-02	PLATE SPRING	1		
33AA	1164-7316-01	LABEL	1		
34AA	**1171-2423-01**	**SHIELD**	**1**		

INDEX	PART NO.	PART NAME	QTY	AREA	REMARKS

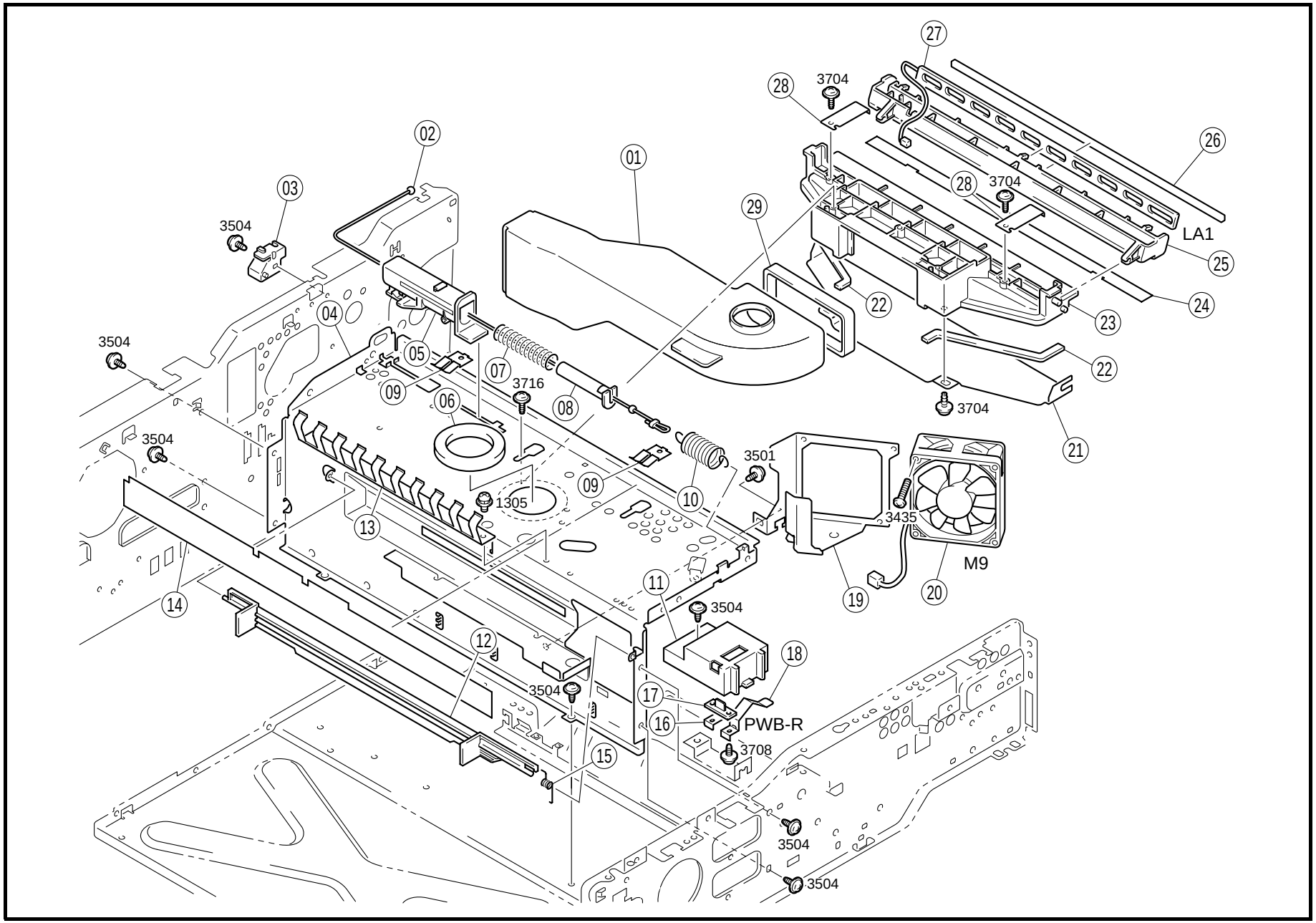
01
02
03
04
05
06
07
08
09
10
11
12
13
14
15
16
17
18
19
20
21
22
23
24
25
26
27
28
29
3504
3704
3716
3501
1305
3435
M9
PWB-R
3708
LA1

INDEX	PART NO.	PART NAME	QTY	AREA	REMARKS
01AA	1165-2033-02	DUCT	1		
02AA	1164-2043-01	WIRE	1		
03AA	1164-2050-01	GUIDE	1		
04AA	1165-2087-04	FRAME	1		
05AA	1164-2047-03	FLANGE	1		
06AA	1165-2704-01	SEAL	1		
07AA	1164-2045-01	PRESSURE SPRING	1		
08AA	1164-2046-01	FLANGE	1		
09AA	1164-2167-01	PLATE SPRING	2		
10AA	1164-2044-01	TENSION SPRING	1		
11AA	1165-2090-01	HOLDER	1		
12AA	1164-2036-02	SHUTTER	1		
*13AA	1171-2130-01	GROUND PLATE	1	0702	
14AA	1165-2711-01	SEAL	1		
15AA	1164-2037-01	TORSION SPRING	1		
16AA	1165-2092-01	GROUND PLATE	1		
17AA	1164-0109-01	PW BOARD-R (PWB-R)	1		
18AA	1165-2091-01	GROUND PLATE	1		
19AA	1165-2085-02	BRACKET	1		
20AA	9313-1710-51	FAN MOTOR I/C COOL (M9)	1		
21AA	1165-2056-02	DUCT	1		
22AA	1165-2057-01	SEAL	2		
23AA	1165-2055-03	DUCT	1		
24AA	1165-4310-01	SEAL	1		
25AA	1165-4305-02	HOLDER	1		
26AA	1165-4307-01	SEAL	1		
27AA	9351-1810-21	TUBE LAMP ERASER (LA1)	1		
28AA	1165-4308-02	PLATE SPRING	2		
29AA	1165-2065-02	SEAL	1		

INDEX	PART NO.	PART NAME	QTY	AREA	REMARKS

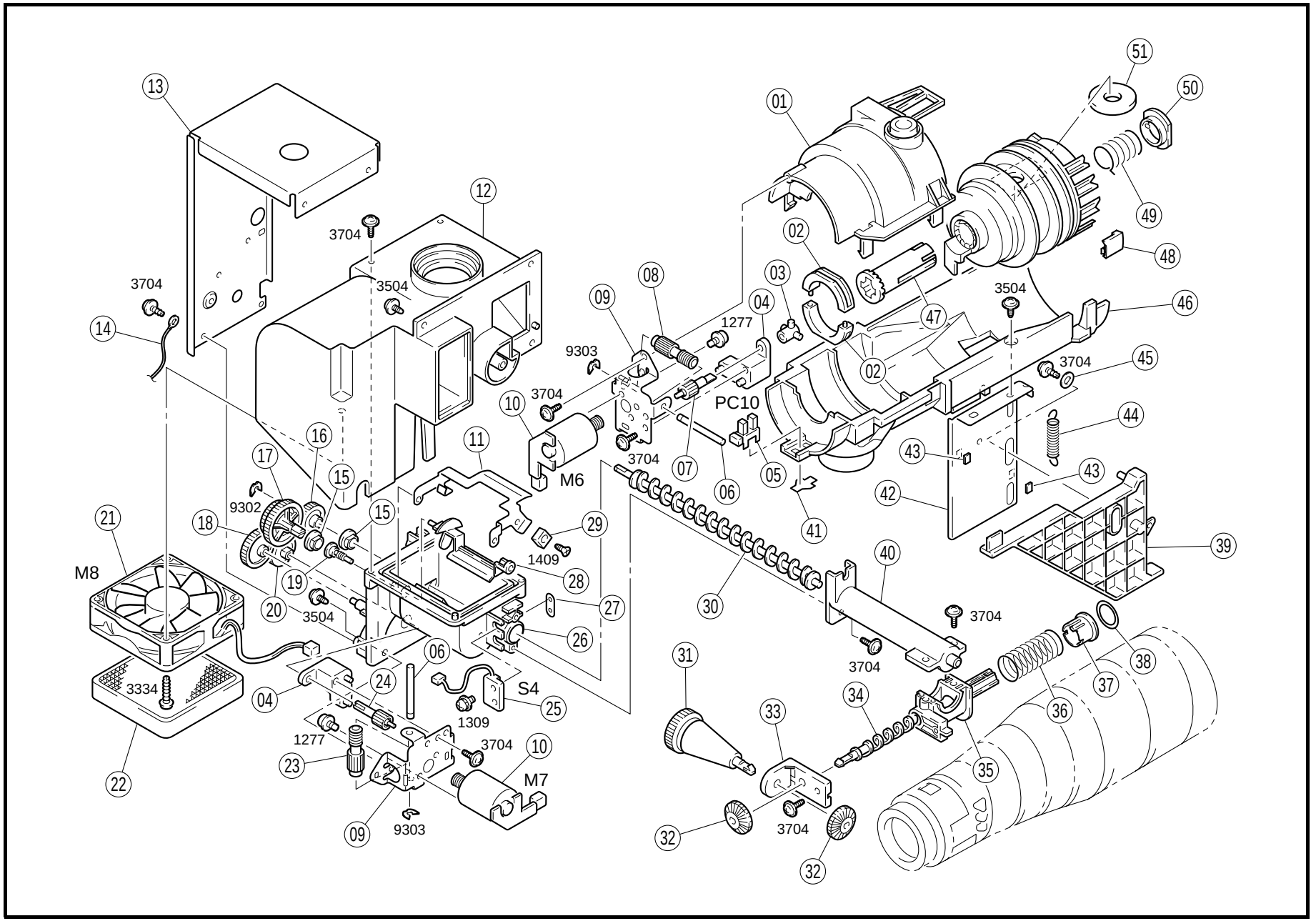
01
02
03
04
05
06
07
08
09
10
11
12
13
14
15
16
17
18
19
20
21
22
23
24
25
26
27
28
29
30
31
32
33
34
35
36
37
38
39
40
41
42
43
44
45
46
47
48
49
50
51
3704
3504
1277
9303
PC10
M6
M7
M8
9302
1409
3334
S4
1309

INDEX	PART NO.	PART NAME			QTY	AREA	REMARKS
01AA	1165-5323-01	COVER			1		
02AA	1139-5023-01	SUPPORT			2		
03AA	1151-5024-01	PAWL			1		
04AA	1165-5317-02	BUSHING			2		
05AA	9335-1510-11	PHOTO INTERRUPTER	BOTTLE	(PC10)	1		
06AA	1165-5315-02	SHAFT			2		
07AA	1165-5316-02	GEAR 20T			1		
08AA	1165-5314-02	WORM GEAR			1		
09AA	1165-5313-03	FRAME			2		
10AA	1165-0340-03	PWB-MOTOR		(M6,7)	2		
11AA	1136-5228-01	DETECTING PLATE			1		
12AA	1165-5302-02	HOLDER			1		
13AA	1165-5332-02	BRACKET			1		
14AA	1165-6815-01	HARNESS			1		
15AA	1200-3221-06	BUSHING			2		
16AA	1136-5224-01	GEAR 29T			1		
17AA	1136-5220-01	GEAR 32/44T			1		
18AA	1300-3251-17	GEAR 38T			1		
19AA	1100-1432-01	SHOULDER SCREW			1		
20AA	1136-5221-01	GEAR 33T			1		
21AA	9313-1710-51	FAN MOTOR	OZON FAN	(M8)	1		
*22AA	1165-2031-01	OZONE FILTER			1	0703	
*22BA	1165-2032-01	OZONE FILTER			1	2706	
23AA	1165-5328-01	WORM GEAR			1		
24AA	1165-5329-01	GEAR 20T			1		
25AA	9334-2710-11	SWITCH	TONER EMP	(S4)	1		
26AA	1165-5303-03	HOUSING			1		
27AA	1100-3132-04	PLATE NUT			1		
28AA	1136-5219-01	SCRAPER PLATE			1		
29AA	9326-2900-06	MAGNET			1		
30AA	1165-5305-01	SPIRAL ROLLER			1		
31AA	1165-5312-01	GEAR 30T			1		
32AA	1165-5311-01	GEAR 24T			2		
33AA	1165-5310-01	BUSHING			1		
34AA	1165-5307-02	SPIRAL ROLLER			1		
35AA	1165-5306-02	DUCT			1		
36AA	1165-5309-02	PRESSURE SPRING			1		
37AA	1165-5308-01	SHUTTER			1		
38AA	1165-5319-01	SEAL			1		
39AA	1165-5330-01	LEVER			1		
40AA	1165-5304-02	DUCT			1		
41AA	1136-2131-03	STOPPER			1		

INDEX	PART NO.	PART NAME	QTY	AREA	REMARKS
42AA	1165-5331-01	BRACKET	1		
43AA	1165-5334-01	SEAL	2		
44AA	1400-2142-13	TENSION SPRING	1		
45AA	1200-1436-01	WASHER	1		
46AA	1165-5324-03	COVER	1		
47AA	1165-5326-02	SHAFT	1		
48AA	1165-5325-01	PIN	3		
49AA	1165-5335-01	PRESSURE SPRING	1		
50AA	1151-5032-01	COLLAR	1		
51AA	1165-5327-03	SEAL	1		

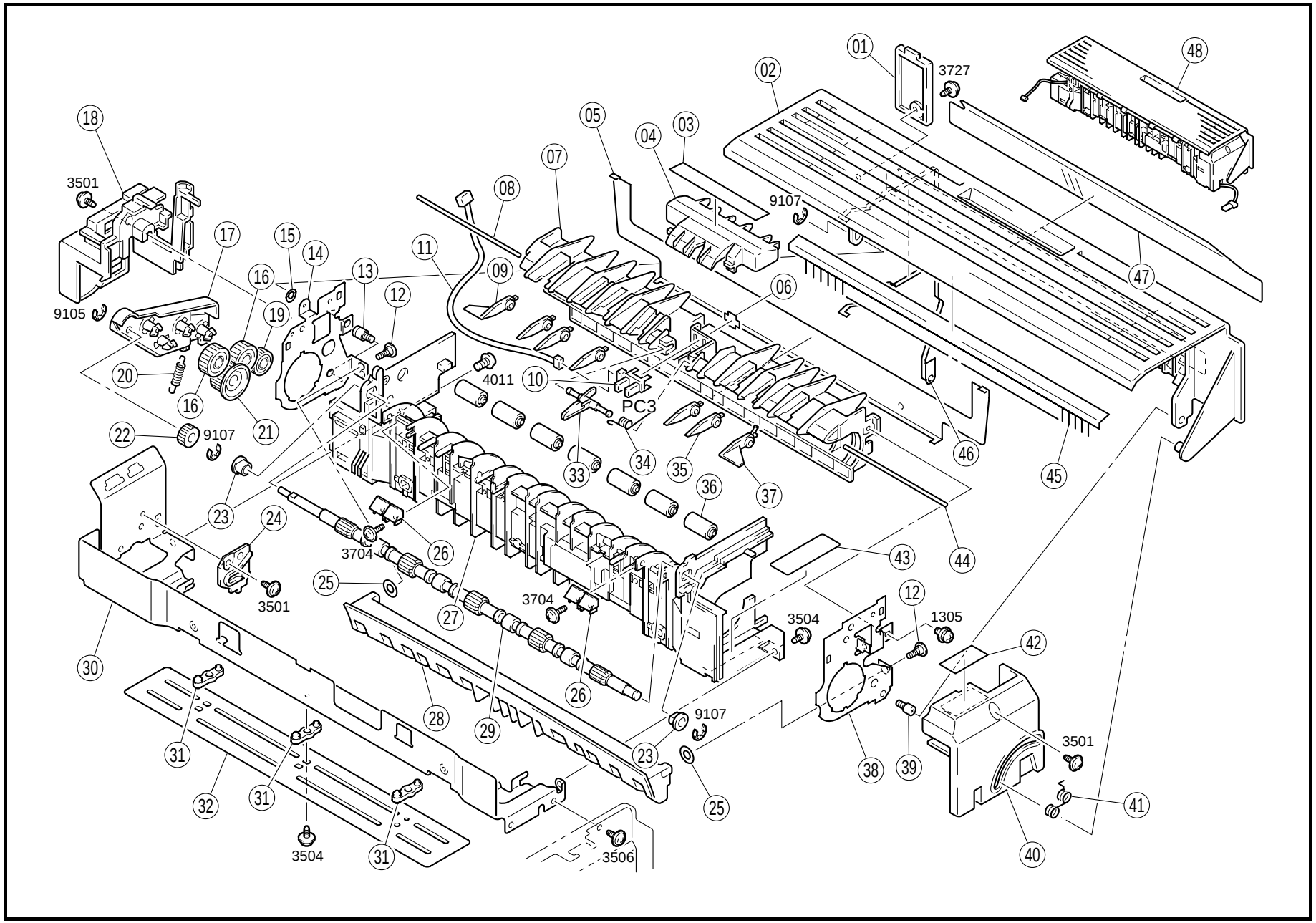
01
3727
48
02
03
04
05
07
08
18
3501
9107
17
15
14
16
13
11
09
06
47
9105
19
12
20
4011
10
PC3
16
21
22
9107
34
35
46
45
33
36
37
23
24
44
43
3704
26
25
3501
27
3704
3504
12
1305
42
30
28
29
26
9107
38
39
3501
31
32
31
23
25
41
3504
31
3506
40

INDEX	PART NO.	PART NAME	QTY	AREA	REMARKS
01AA	1164-1005-02	COVER	1		
02AA	1164-5811-16	COVER	1		
03AA	1164-7310-01	LABEL CAUTION	1		
04AA	1164-5776-03	COVER	1		
05AA	1164-5761-01	REINFORCE PLATE	1		
06AA	4470-4024-01	STOPPER	1		
07AA	1164-0756-03	GUIDE ASSY	1		
08AA	1164-5786-01	SHAFT	1		
09AA	1164-5769-01	GUIDE LEVER	1		
10AA	9335-1510-11	PHOTO INTERRUPTER EXIT (PC3)	1		
11AA	1164-6805-02	HARNESS	1		
12AA	1164-5783-01	SHOULDER SCREW	2		
13AA	1164-5819-01	SHOULDER SCREW	1		
*14AA	1164-5742-04	REAR FRAME	1	2704	
*14BA	1165-5746-03	FRAME	1	0702	
15AA	1164-5840-01	SPACER	1		
16AA	1164-5809-01	GEAR 22T	2		
17AA	1164-5806-03	LEVER	1		
18AA	1164-5731-05	COVER	1		
19AA	0993-3211-01	GEAR 17T	1		
20AA	1164-5805-03	TENSION SPRING	1		
21AA	1164-5808-02	GEAR 24T	1		
22AA	1164-5807-01	GEAR 14T	1		
23AA	1274-2611-01	BUSHING	2		
24AA	1164-2093-01	HOLDER	1		
25AA	1164-5765-01	SAPCER	2		
26AA	1164-5779-01	GUIDE	2		
27AA	1164-0752-03	FRAME ASSY	1		
28AA	1164-5743-05	GUIDE PLATE-FNT	1		
29AA	1164-5801-06	ROLLER	1		
30AA	1165-0231-06	BRACKET	1		
31AA	1165-2702-01	SPACER	3		
32AA	1165-2701-02	BRACKET	1		
33AA	1164-5734-02	ACTUATOR	1		
34AA	1164-5735-01	TORSION SPRING	1		
35AA	1164-5751-02	GUIDE LEVER	5		
36AA	1164-5762-01	ROLL	7		
37AA	1164-5755-02	GUIDE LEVER	1		
38AA	1164-5741-04	FRONT FRAME	1		
39AA	1164-5816-01	SHOULDER SCREW	1		
40AA	1164-5730-06	COVER	1		
41AA	1164-5815-03	TORSION SPRING	1		
42AA	1164-7328-01	LABEL JAM REMOVAL	1		
43AA	1164-5738-01	SEAL	1		
44AA	1164-5785-01	SHAFT	1		
45AA	1164-5812-12	NEUTRALIZING BRUSH	1		
46AA	1164-5841-01	CONTACT PLATE	1		
***47AA**	**1170-5842-02**	POLYESTER FILM	1	0702	
*48AA	1170-0322-01	FUSING UNIT	1	2704	
*48BA	1170-0321-01	FUSING UNIT	1	0702	

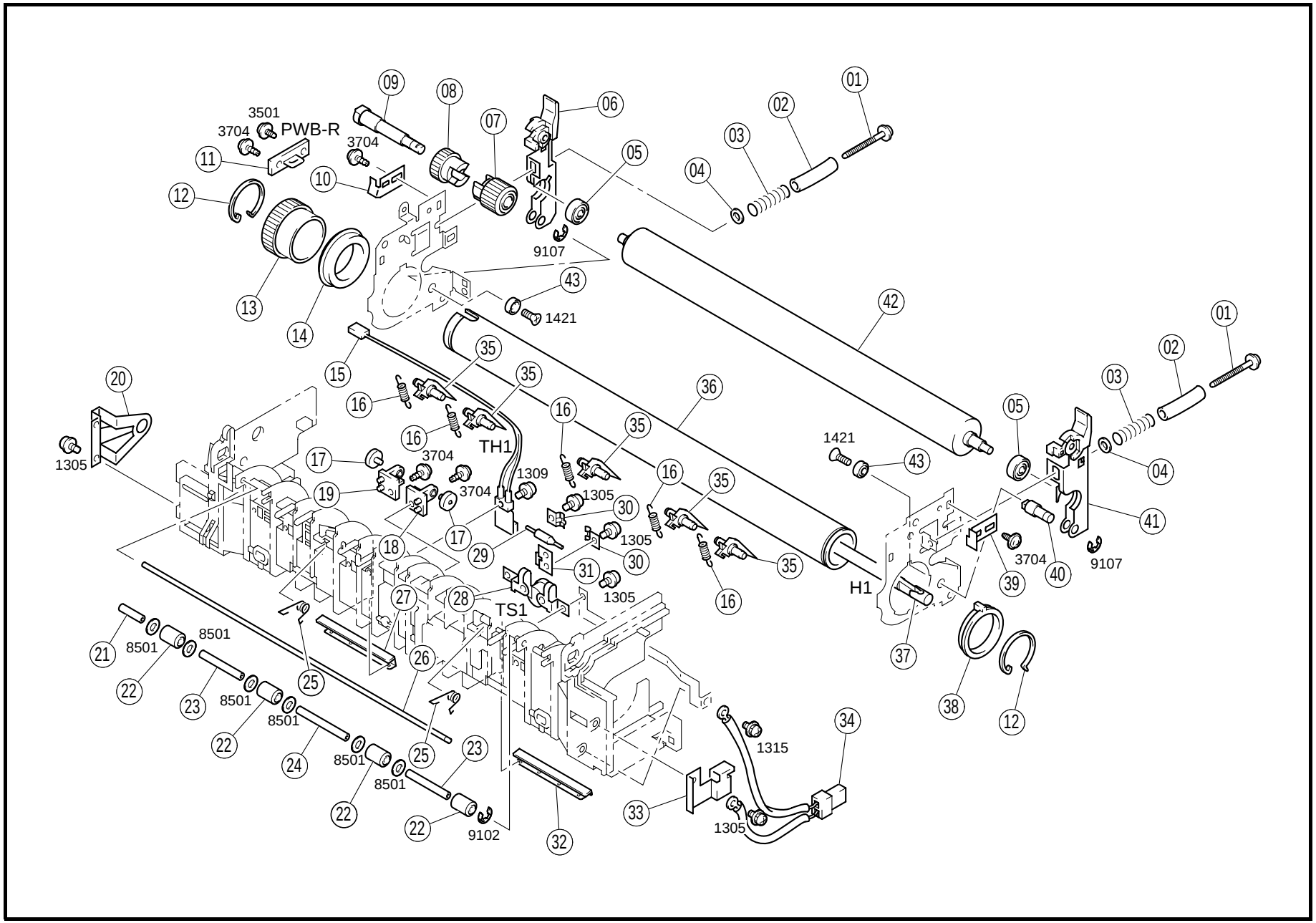
PWB-R
3501
3704
3704
9107
1421
TH1
1309
1305
1305
1305
TS1
H1
1421
3704
3704
9107
8501
8501
8501
8501
8501
8501
9102
1315
1305

INDEX	PART NO.	PART NAME			QTY	AREA	REMARKS
01AA	1164-5749-02	SHOULDER SCREW			2		
02AA	1164-5795-01	COLLAR			2		
03AA	1164-5739-02	PRESSURE SPRING			2		
04AA	1164-5782-01	SPACER			2		
05AA	1165-5713-01	BALL BEARING			2		
06AA	1164-0214-04	LEVER			1		
07AA	1164-5758-02	GEAR 20T			1		
08AA	1164-5770-01	GEAR 20T			1		
09AA	1164-5757-02	SHAFT			1		
10AA	1164-5790-03	REGULATING PLATE			1		
11AA	0993-0105-01	PW BOARD-R(NO IC)		(PWB-R)	1		
12AA	1164-5772-01	C-RING			2		
13AA	1164-5709-01	GEAR 39T			1		
*14AA	1151-5610-02	BUSHING			1	2704	
*14BA	1165-5712-01	BALL BEARING			1	0702	
15AA	9372-2710-12	THERMISTOR	FUSING	(TH1)	1		
16AA	1164-5733-01	PRESSURE SPRING			5		
17AA	1164-5797-02	ROLL			2		
18AA	1164-5796-01	HOLDER			1		
19AA	1164-5798-01	HOLDER			1		
20AA	1164-5737-01	HOLDER			1		
21AA	1164-5831-01	TUBE			1		
22AA	0993-3220-01	ROLL			4		
23AA	1164-5830-01	TUBE			2		
24AA	1164-5829-01	TUBE			1		
25AA	1164-5803-02	TORSION SPRING			2		
26AA	1164-5804-03	SHAFT			1		
27AA	1165-5760-01	CLEANING PAD			1		
28AA	9334-1710-42	THERMOSTAT	FUSING	(TS1)	1		
29AA	9346-3810-31	THERMAL FUSE			1		
30AA	1164-5777-01	SUPPORT PLATE			2		
31AA	1164-5778-01	GROUND PLATE			1		
32AA	1165-5759-01	CLEANING PAD			1		
33AA	1164-5744-01	HOLDER			1		
34AA	1164-6804-02	HARNESS			1		
35AA	1164-5732-03	SEPARATOR			5		
*36AA	1164-5704-01	FUSING ROLLER			1	2704	
*36BA	1170-5701-01	FUSING ROLLER			1	0702	
*37AA	9352-2711-32	HEATER	FUSING	(H1)	1	2704	
*37BA	9352-2711-42	HEATER	FUSING	(H1)	1	0702	
38AA	1151-5610-02	BUSHING			1		
39AA	1164-5789-03	REGULATING PLATE			1		

INDEX	PART NO.	PART NAME	QTY	AREA	REMARKS
40AA	1164-5750-01	SHAFT	1		
41AA	1164-0213-03	LEVER	1		
42AA	1164-5707-01	ROLLER	1		
43AA	1164-5719-01	COLLAR	2		

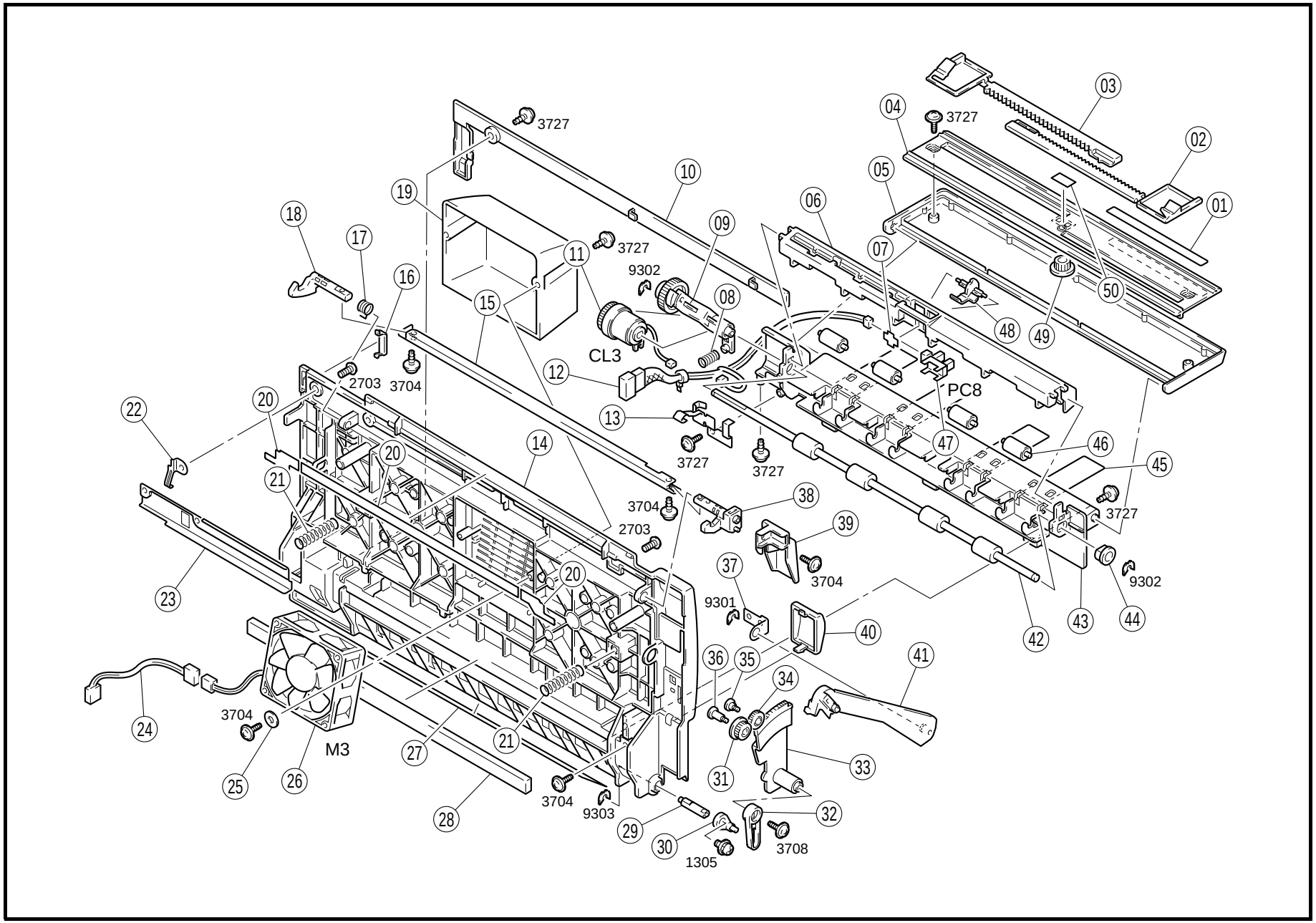
01
02
03
04
05
06
07
08
09
10
11
12
13
14
15
16
17
18
19
20
21
22
23
24
25
26
27
28
29
30
31
32
33
34
35
36
37
38
39
40
41
42
43
44
45
46
47
48
49
50
3727
9302
CL3
2703
3704
PC8
9301
M3
9303
1305
3708

INDEX	PART NO.	PART NAME	QTY	AREA	REMARKS
*01AA	1164-7472-02	SCALE	1	2300	
*01BA	1164-7471-02	SCALE	1	0400	
02AA	1164-3203-03	REGULATING PLATE	1		
03AA	1164-3204-03	REGULATING PLATE	1		
04AA	1164-3221-01	TABLE	1		
05AA	1164-3222-13	COVER	1		
06AA	4603-3202-01	COVER	1		
07AA	4470-4024-01	STOPPER	1		
08AA	4603-3211-01	PRESSURE SPRING	1		
09AA	4603-0751-01	LEVER ASSY	1		
10AA	1164-3220-02	COVER	1		
11AA	9322-1710-21	CLUTCH MAN FEED (CL3)	1		
12AA	4603-6801-04	HARNESS	1		
13AA	4603-3216-04	GROUND PLATE	1		
14AA	1165-0755-01	COVER ASSY	1		
15AA	1164-2014-03	LOCK PLATE	1		
16AA	1164-1033-01	COVER	1		
17AA	1164-2013-02	TORSION SPRING	1		
18AA	1164-2011-03	HOOK	1		
*19AA	1170-3531-01	COVER	1	2706	
20AA	1164-2719-01	GROUND PLATE	1		
21AA	1164-3518-01	PRESSURE SPRING	2		
22AA	1164-2071-02	GROUND PLATE	1		
23AA	1164-2067-03	BRACKET	1		
24AA	1164-6816-01	HARNESS	1		
25AA	1200-1411-01	WASHER	2		
26AA	9313-1710-51	FAN MOTOR COOLING (M3)	1		
*27AA	1170-3536-01	POLYESTER FILM	1	0702	
28AA	1164-3526-01	CUSHION	1		
29AA	1164-2015-01	SHAFT	1		
30AA	1164-2007-12	JOINT	1		
31AA	1164-2027-02	GEAR 14T	1		
32AA	1164-2008-12	LEVER	1		
33AA	1164-2009-03	LEVER	1		
34AA	1164-2026-01	GEAR 14T	1		
35AA	1164-2028-01	SHOULDER SCREW	1		
36AA	1164-2084-01	SHOULDER SCREW	1		
37AA	1164-2054-01	BRACKET	1		
38AA	1164-2017-04	HOOK	1		
39AA	1164-2012-02	LOCK RELEASE LEVER	1		
40AA	1164-1034-01	COVER	1		
41AA	1164-2316-01	LEVER	1		
42AA	4603-3206-01	ROLLER	1		
43AA	1164-3201-16	GUIDE	1		
44AA	1274-2611-01	BUSHING	1		
45AA	4603-3218-01	GUIDE BAR	4		
46AA	4603-3207-01	ROLL	4		
47AA	9335-1510-11	PHOTO INTERRUPTER MAN FEED (PC8)	1		
48AA	4603-3214-01	ACTUATOR	1		
49AA	4603-3205-01	GEAR 12T	1		
50AA	4603-7477-01	LABEL	1		

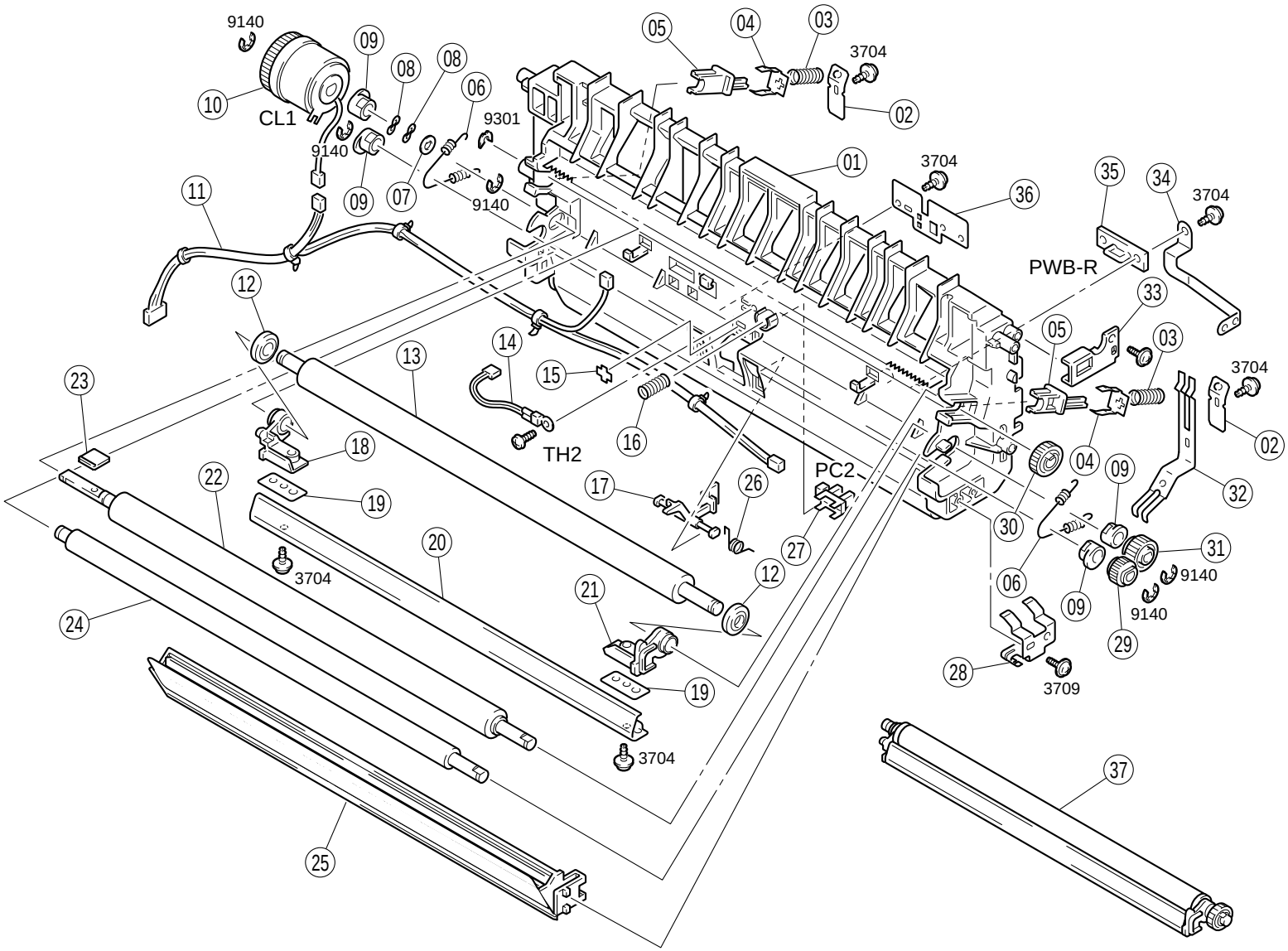
9140
09
08
08
06
05
04
03
3704
02
10
CL1
9301
9140
01
3704
36
35
34
3704
11
09
07
9140
PWB-R
12
33
05
03
3704
14
13
15
23
16
02
18
TH2
04
09
32
22
17
26
PC2
19
30
31
20
27
3704
12
9140
06
09
9140
21
24
29
28
3709
19
3704
37
25

INDEX	PART NO.	PART NAME	QTY	AREA	REMARKS
01AA	1165-0753-01	HOLDER ASSY	1		
02AA	1164-4209-02	GROUND PLATE	2		
03AA	1164-4207-01	PRESSURE SPRING	2		
04AA	1164-4222-01	PLATE SPRING	2		
05AA	1164-4206-02	BUSHING	2		
06AA	1164-3513-01	TENSION SPRING	2		
*07AA	1200-1461-08	WASHER	1	2704	
*08AA	1500-2660-13	WAVE WASHER	2	2704	
09AA	1164-3509-01	BUSHING	4		
10AA	9322-1710-42	CLUTCH TIMING (CL1)	1		
11AA	1165-6806-03	HARNESS	1		
12AA	1164-4212-01	COLLAR	2		
13AA	1164-4201-01	ROLLER	1		
14AA	9372-2710-21	THERMISTOR I/C (TH2)	1		
15AA	4470-4024-01	STOPPER	1		
16AA	1164-4213-01	PRESSURE SPRING	1		
17AA	1164-3504-03	ACTUATOR	1		
18AA	1164-4205-04	HOLDER	1		
19AA	1164-4223-02	POLYESTER FILM	4		
20AA	1164-4210-02	GUIDE PLATE	1		
21AA	1164-4204-03	HOLDER	1		
*22AA	1170-3533-02	CONVEYOR ROLLER	1	0702	
*22BA	1164-3505-01	CONVEYOR ROLLER	1	2704	
*23AA	1170-3534-01	HOLDER	1	0702	
24AA	1164-3507-01	CONVEYOR ROLLER	1		
25AA	1164-3507-01	CONVEYOR ROLLER	1		
26AA	1164-3527-02	TORSION SPRING	1		
27AA	9335-1510-11	PHOTO INTERRUPTER TIMING (PC2)	1		
28AA	1164-3514-02	GROUND PLATE	1		
29AA	1164-3515-01	GEAR 13T	1		
30AA	1164-4203-02	GEAR 18T	1		
31AA	1164-3508-01	GEAR 18T	1		
32AA	1164-4219-02	TERMINAL	1		
33AA	1164-4218-01	HOLDER	1		
34AA	1164-4220-01	TERMINAL	1		
35AA	1164-0109-01	PW BOARD-R (PWB-R)	1		
36AA	1164-3529-01	BRACKET	1		
37AA	1164-0335-01	TRANSFER ROLLER UNI	1		

INDEX	PART NO.	PART NAME	QTY	AREA	REMARKS

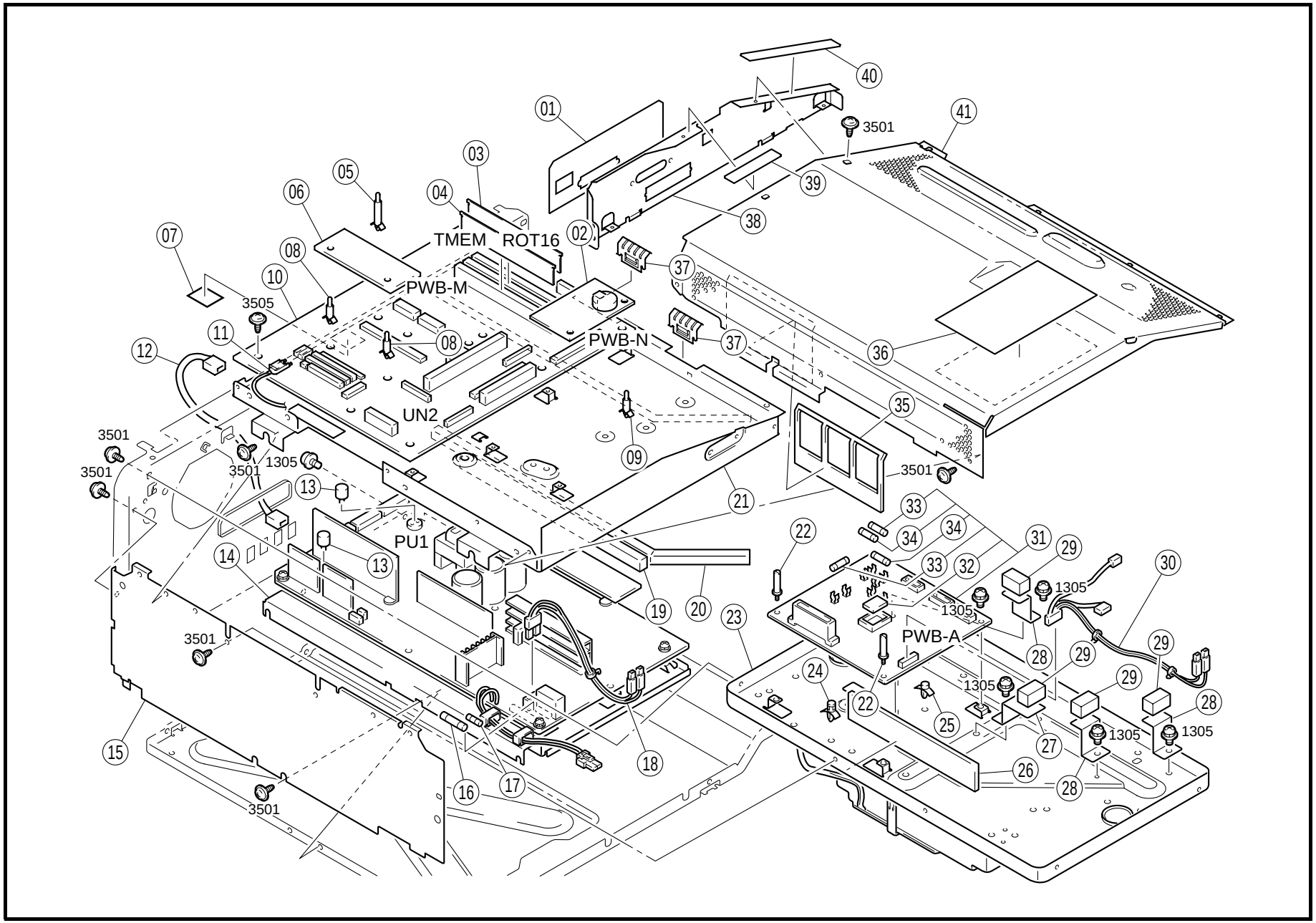
01
02
03
04
05
06
07
08
09
10
11
12
13
14
15
16
17
18
19
20
21
22
23
24
25
26
27
28
29
30
31
32
33
34
35
36
37
38
39
40
41
3501
1305
3505
TMEM
ROT16
PWB-M
PWB-N
UN2
PU1
PWB-A

INDEX	PART NO.	PART NAME			QTY	AREA	REMARKS
*01AA	1171-2183-02	LABEL			1	2704	
*01BA	1171-2184-02	LABEL			1	0702	
02AA	1171-0122-01	PW BOARD-N		(PWB-N)	1		
03AA	1166-1012-02	MEMORY 16MB			1		
04AA	1166-1014-02	MEMORY 32MB	OPTION	(TMEM)	1		
05AA	9384-1810-31	PWB SUPPORT			2		
***06AA**	**1171-0125-02**	PW BOARD-M	ROM	(PWB-M)	1	0702	
*06BA	1171-0124-01	PW BOARD-M	ROM	(PWB-M)	1	2704	
*07AA	1075-3091-01	POLYESTER FILM			1	0702	
08AA	9384-1810-41	PWB SUPPORT			2		
09AA	9384-1900-56	PWB SUPPORT 6.35H			3		
10AA	1166-1154-01	MFB BOARD	MFB	(UN2)	1		
11AA	1171-6804-01	HARNESS			1		
12AA	1165-6812-02	HARNESS			1		
13AA	9346-3810-71	FUSE 3.15A		(F3,4)	2		
*14AA	9325-2710-33	POWER SUPPLY	POWER	(PU1)	1	2704	
*14BA	9325-2710-44	PW BOARD-PU	POWER	(PU1)	1	0702	
15AA	1164-2058-05	REINFOCE PLATE			1		
*16AA	9346-3810-81	FUSE 15A		(F2)	1	2704	
*16BA	9346-3610-31	FUSE 8A		(F2)	1	0702	
*17AA	9346-3810-61	FUSE 10A		(F1)	1	2704	
*17BA	1165-7801-01	FUSE 6.3A		(F1)	1	0702	
18AA	1164-6802-04	HARNESS			1		
*19AA	1171-6203-01	SPONGE			1	0702	
20AA	1165-2705-01	SEAL			1		
21AA	1164-2101-01	BASE PLATE			1		
22AA	1164-2179-01	SHOULDER SCREW			2		
23AA	1164-0533-04	P/H ASSY			1		
24AA	9384-1621-21	PWB SUPPORT 6.4H			2		
25AA	9384-1610-11	PWB SUPPORT			1		
*26AA	1171-2129-01	SPONGE			1	0702	
*27AA	1171-2134-01	BRACKET			1	0702	
*28AA	1171-2133-01	BRACKET			3	0702	
*29AA	1171-6204-01	SPONGE			4	0702	
30AA	1164-6813-02	HARNESS			1		
*31AA	1170-0101-03	PW BOARD-A		(PWB-A)	1	2704	
*31BA	1170-0110-02	PW BOARD-A		(PWB-A)	1	0702	
32AA	1170-6601-03	IC			1		
33AA	9346-3710-21	FUSE 3A			2		
34AA	9346-3510-11	FUSE 1A			2		
*35AA	1171-2128-01	SPONGE			1	0702	
36AA	1171-7317-01	LABEL			1		

INDEX	PART NO.	PART NAME	QTY	AREA	REMARKS
*37AA	1171-2169-01	GROUND PLATE	2	0702	
38AA	1165-2119-01	BRACKET	1		
*39AA	1171-6201-01	SPONGE	1	0702	
*40AA	1171-6202-01	SPONGE	1	0702	
41AA	1164-2102-01	SHIELD	1		

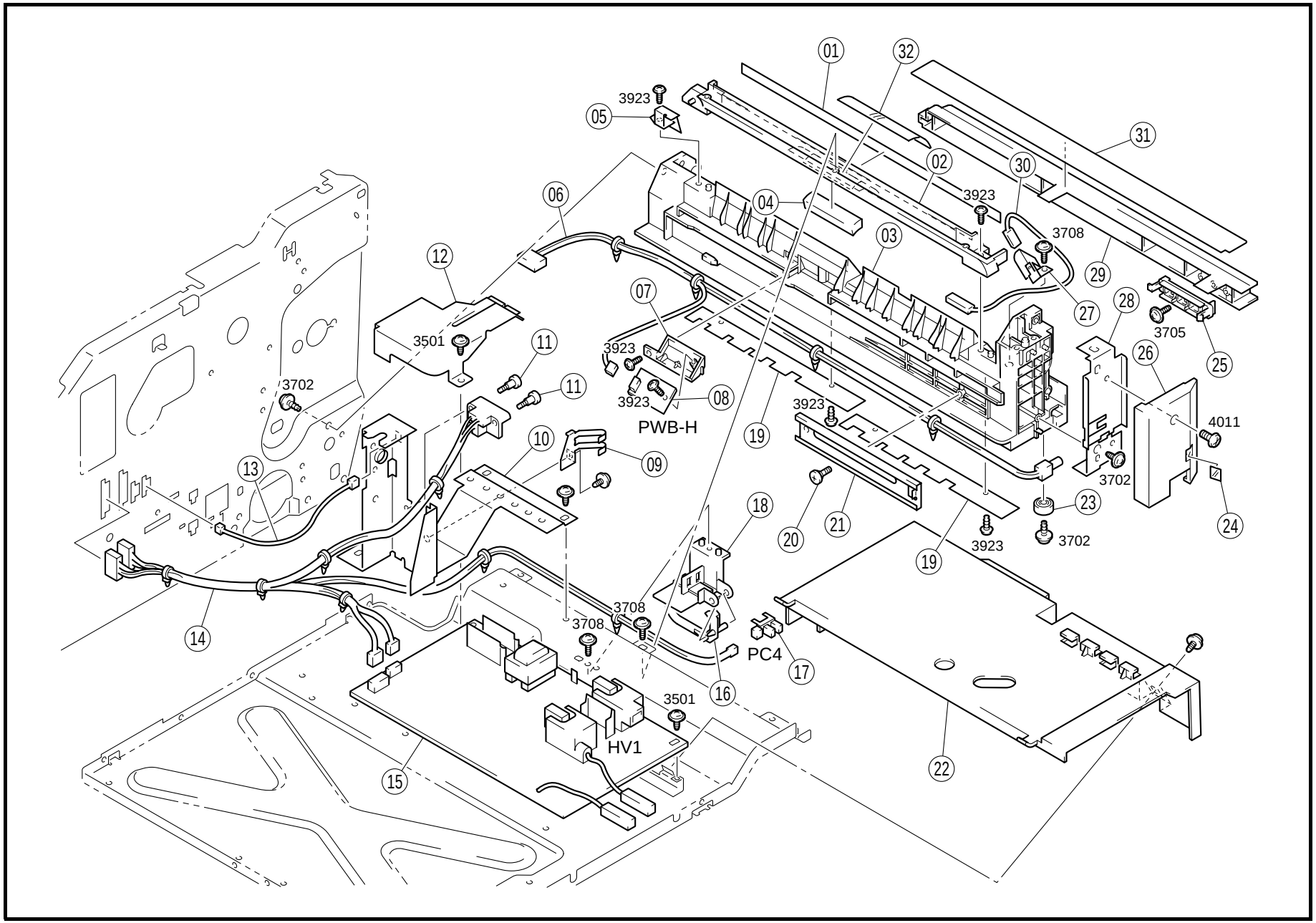
01
32
3923
05
31
02
30
3923
06
04
3708
03
29
12
07
27
28
3705
3501
11
3923
26
25
3702
11
3923
08
3923
4011
PWB-H
19
10
09
13
3702
18
23
20
21
24
3923
3702
19
3708
3708
14
PC4
17
16
3501
HV1
22
15

INDEX	PART NO.	PART NAME	QTY	AREA	REMARKS
01AA	1164-3535-01	POLYESTER FILM	1		
02AA	1164-3521-04	GUIDE BAR	1		
03AA	1164-2023-15	RAIL	1		
04AA	1164-3067-01	SPONGE	1		
05AA	1164-2157-02	GROUND PLATE	1		
06AA	1164-6810-02	HARNESS	1		
07AA	1164-2080-01	HOLDER	1		
08AA	1164-0108-02	PW BOARD-H PAPER (PWB-H)	1		
09AA	1165-2029-01	GROUND PLATE	1		
*10AA	1170-0238-13	BRACKET	1	0703	
*10BA	1170-0237-13	BRACKET	1	2706	
11AA	1079-2219-01	SHOULDER SCREW	2		
12AA	1164-2079-01	BRACKET	1		
13AA	1165-6810-04	HARNESS	1		
14AA	1165-6807-04	HARNESS	1		
15AA	9325-1810-24	PW BOARD-HV (HV1)	1		
16AA	1164-3027-01	ACTUATOR	1		
17AA	9335-1510-11	PHOTO INTERRUPTER EMPTY (PC4)	1		
18AA	1164-3026-02	COVER	1		
19AA	1164-2070-01	COVER	2		
20AA	1164-3053-01	SHOULDER SCREW	1		
21AA	1164-3051-02	RAIL	1		
22AA	1165-2105-02	COVER	1		
23AA	0996-3055-01	RUBBER FOOT	1		
24AA	1164-3074-01	REFLECTOR	1		
*25AA	4108-3414-02	LEVER	1	0702	
26AA	1164-3072-01	COVER	1		
27AA	1164-2155-01	TERMINAL	1		
28AA	1164-3073-02	BRACKET	1		
*29AA	1164-3302-02	COVER	1	0702	
30AA	1165-6808-03	HARNESS	1		
*31AA	1170-3449-01	POLYESTER FILM	1	2706	
32AA	1164-3538-01	SHEET	1		

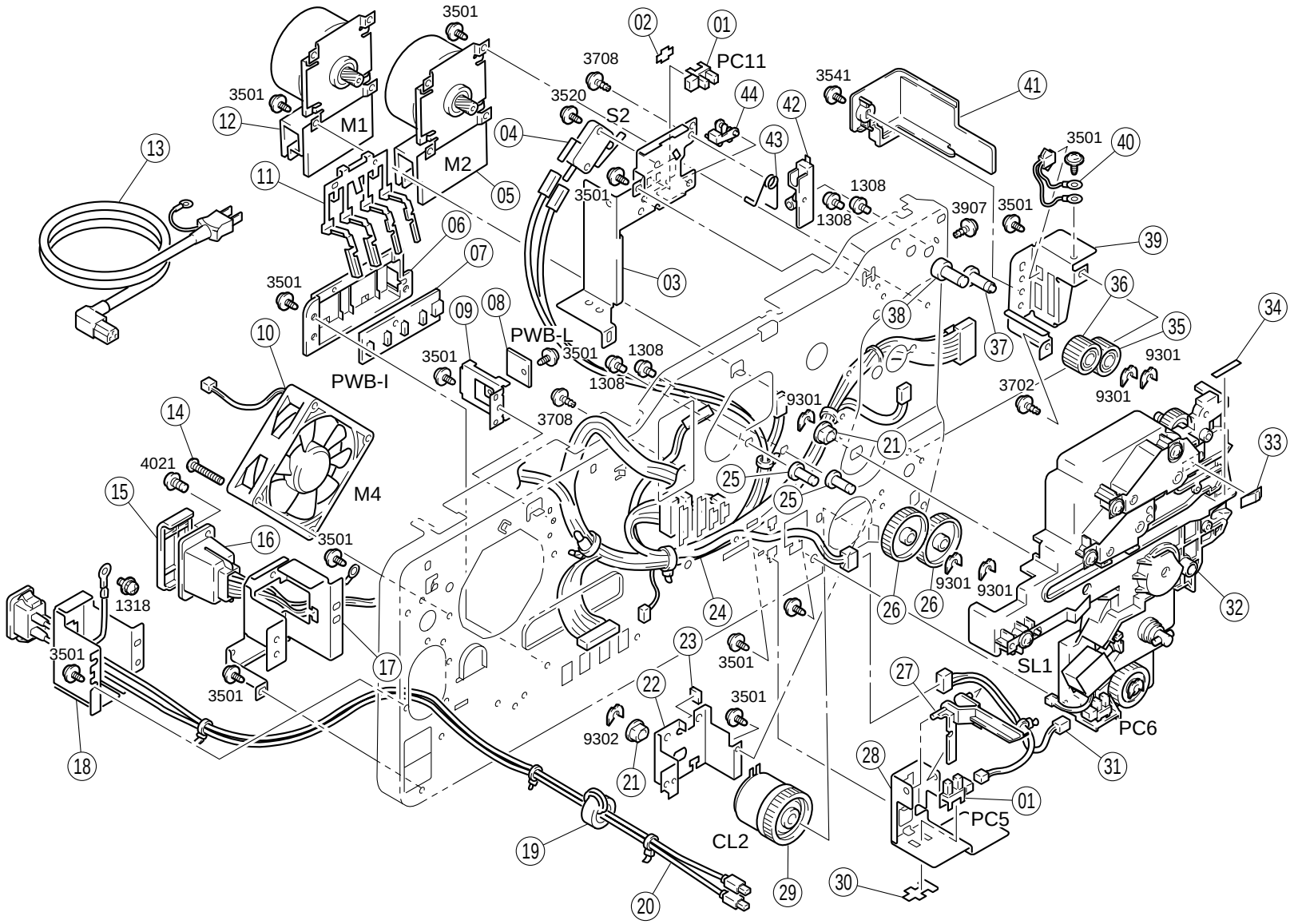
3501
02
01
PC11
3708
3541
41
3501
3520
S2
44
42
12
M1
04
43
3501
40
13
M2
11
05
3501
1308
1308
3907
3501
06
39
07
03
3501
36
09
08
38
34
10
PWB-L
3501
1308
37
35
3501
1308
9301
PWB-I
3702
9301
9301
14
3708
21
33
4021
25
M4
25
15
16
3501
9301
9301
1318
24
26
26
32
3501
23
3501
SL1
17
27
3501
22
3501
PC6
9302
28
31
18
21
01
PC5
CL2
19
29
30
20

INDEX	PART NO.	PART NAME			QTY	AREA	REMARKS
01AA	9335-1510-11	PHOTO INTERRUPTER		(PC5,11)	2		
02AA	1136-2131-03	STOPPER			1		
03AA	1164-2116-02	BRACKET			1		
04AA	9331-2710-11	MICRO SWITCH	DOOR SIDE	(S2)	1		
05AA	9314-2710-82	PWB-MOTOR	TRANS	(M2)	1		
06AA	1164-3022-02	HOLDER			1		
07AA	1164-0105-01	PW BOARD-I	SIZE	(PWB-I)	1		
08AA	1164-0112-01	PW BOARD-L	CPM	(PWB-L)	1		
09AA	1164-2089-01	BRACKET			1		
*10AA	9313-1710-61	FAN MOTOR	COOLING	(M4)	1	2704	
*10BA	9313-1810-41	FAN MOTOR	COOLING	(M4)	1	0702	
11AA	1164-3020-03	LEVER			1		
12AA	9314-2710-72	PWB-MOTOR	I/C	(M1)	1		
*13AA	9381-4610-31	POWER CORD			1	2704	
*13BA	9381-4310-81	POWER CORD			1	0710	
14AA	0993-2045-01	SCREW			4		
15AA	9384-2310-41	COVER			1		
16AA	1164-6811-01	HARNESS			1		
17AA	1164-2123-01	BRACKET			1		
18AA	1164-2165-02	BRACKET			1		
19AA	9326-1510-41	FERRITE CORE			1		
*20AA	1164-6801-04	HARNESS			1	2720	
*20BA	1165-6801-01	HARNESS			1	0710	
21AA	1200-3231-05	BUSHING			2		
22AA	1164-2535-02	BRACKET			1		
*23AA	1170-2539-01	CUSHION			1	0702	
24AA	1165-6811-06	HARNESS			1		
25AA	1165-2596-01	PIN			2		
26AA	1165-2592-01	GEAR 34T			2		
27AA	1164-3023-01	LEVER			1		
28AA	1164-3024-03	BRACKET			1		
29AA	9322-1710-51	CLUTCH	VERT	(CL2)	1		
30AA	1149-3444-01	COVER			1		
31AA	1164-6809-01	HARNESS			1		
32AA	1165-0161-05	DRIVE UNIT			1		
33AA	1165-2317-01	SPACER			1		
34AA	1164-7323-01	LABEL			1		
35AA	1164-2517-01	GEAR 20T			1		
36AA	1164-2513-01	GEAR 18T			1		
37AA	1164-2530-01	SHAFT			1		
38AA	1164-2527-01	SHAFT			1		
39AA	1164-2041-02	BRACKET			1		

INDEX	PART NO.	PART NAME	QTY	AREA	REMARKS
40AA	1164-6814-01	HARNESS	1		
41AA	1164-1007-01	COVER	1		
42AA	1164-2051-01	GUIDE	1		
43AA	1164-2049-02	TORSION SPRING	1		
44AA	1165-2073-01	ACTUATOR	1		

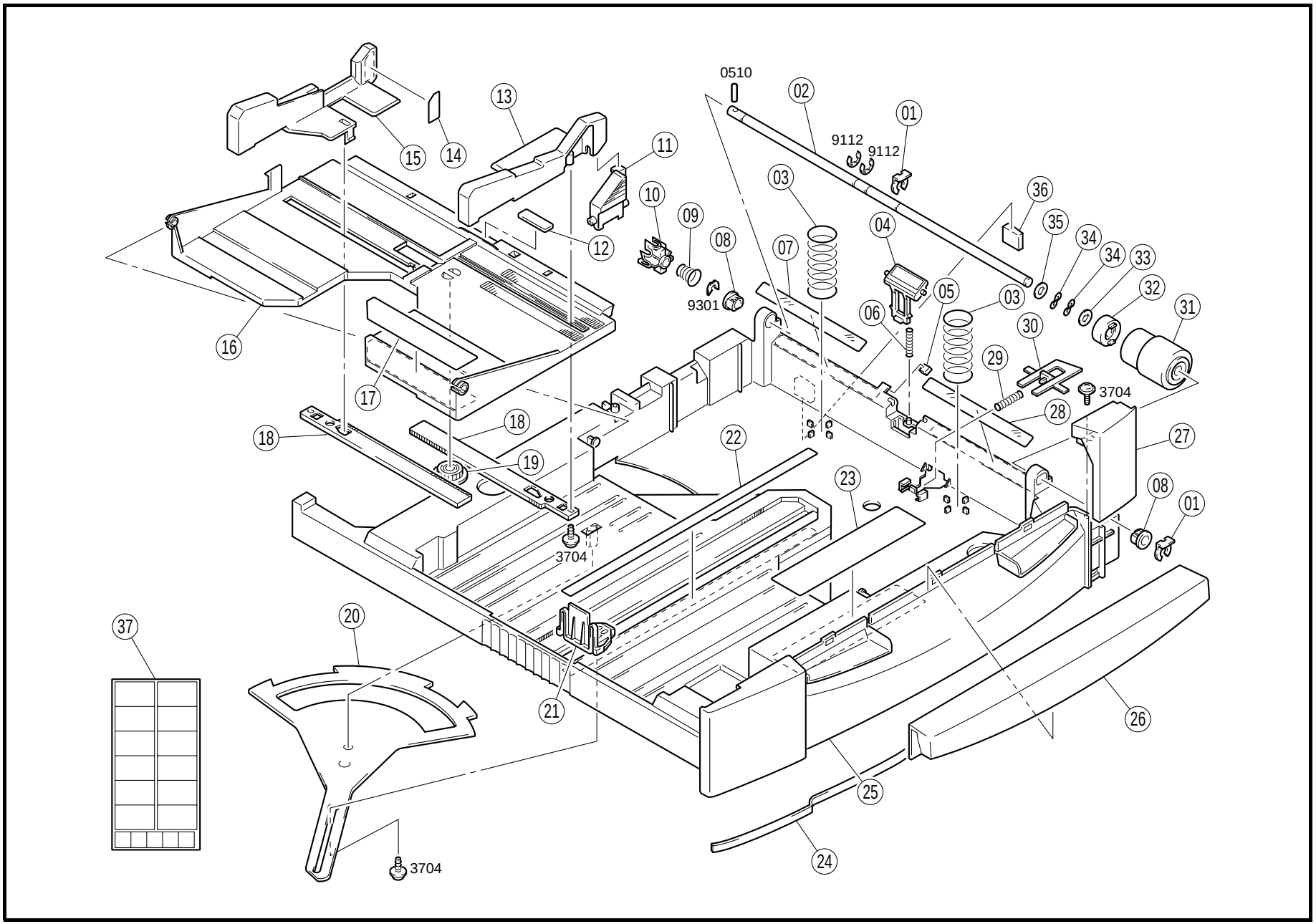
0510
9112
9112
9301
3704
3704
3704

INDEX	PART NO.	PART NAME	QTY	AREA	REMARKS	INDEX	PART NO.	PART NAME	QTY	AREA	REMARKS
01AA	1164-3065-01	STOPPER RING	2								
02AA	1164-3002-03	SHAFT	1								
03AA	1164-3047-02	PRESSURE SPRING	2								
04AA	1164-0755-01	SEPARATOR	1								
05AA	1164-3009-01	CLEANING PAD	1								
06AA	1164-3008-03	PRESSURE SPRING	1								
07AA	1164-3046-01	POLYESTER FILM	1								
08AA	1164-3003-01	BUSHING	2								
09AA	1164-3005-02	PRESSURE SPRING	1								
10AA	1164-3004-02	JOINT	1								
11AA	1164-3050-04	LOCK LEVER	1								
12AA	1164-3064-01	FRICTION SHEET	1								
13AA	1164-3043-02	REGULATING PLATE	1								
14AA	1164-7343-02	LABEL MAX LEVEL	1								
15AA	1164-3044-03	REGULATING PLATE	1								
16AA	1164-3042-03	LIFTING PLATE	1								
17AA	1164-7344-01	WIDTH SCALE	1								
18AA	1164-3049-02	RACK GEAR	2								
19AA	1164-3045-01	GEAR 20T	1								
20AA	1164-3021-01	LEVER	1								
21AA	1164-3048-02	REGULATING PLATE	1								
22AA	1164-7345-01	LENGTH SCALE	1								
23AA	1164-7341-01	LABEL PAPER LOADING	1								
*24AA	1170-3015-01	SPONGE	1	0702							
25AA	1164-3041-05	CASSETTE BODY	1								
26AA	1164-3055-02	HANDLE	1								
27AA	1164-3071-04	COVER	1								
28AA	1164-3056-01	POLYESTER FILM	1								
29AA	1164-3062-01	PRESSURE SPRING	1								
30AA	1164-3061-01	LOCK LEVER	1								
31AA	1164-3001-01	ROLL	1								
32AA	1164-3063-04	WEIGHT	1								
33AA	1164-3066-01	WASHER	1								
34AA	1500-2660-13	WAVE WASHER	2								
35AA	1200-1462-01	WASHER	1								
36AA	1164-3068-01	STOPPER	1								
*37AA	1165-7347-01	LABEL PAPER SIZE	1	2300							
*37BA	1164-7346-01	LABEL	1	0400							

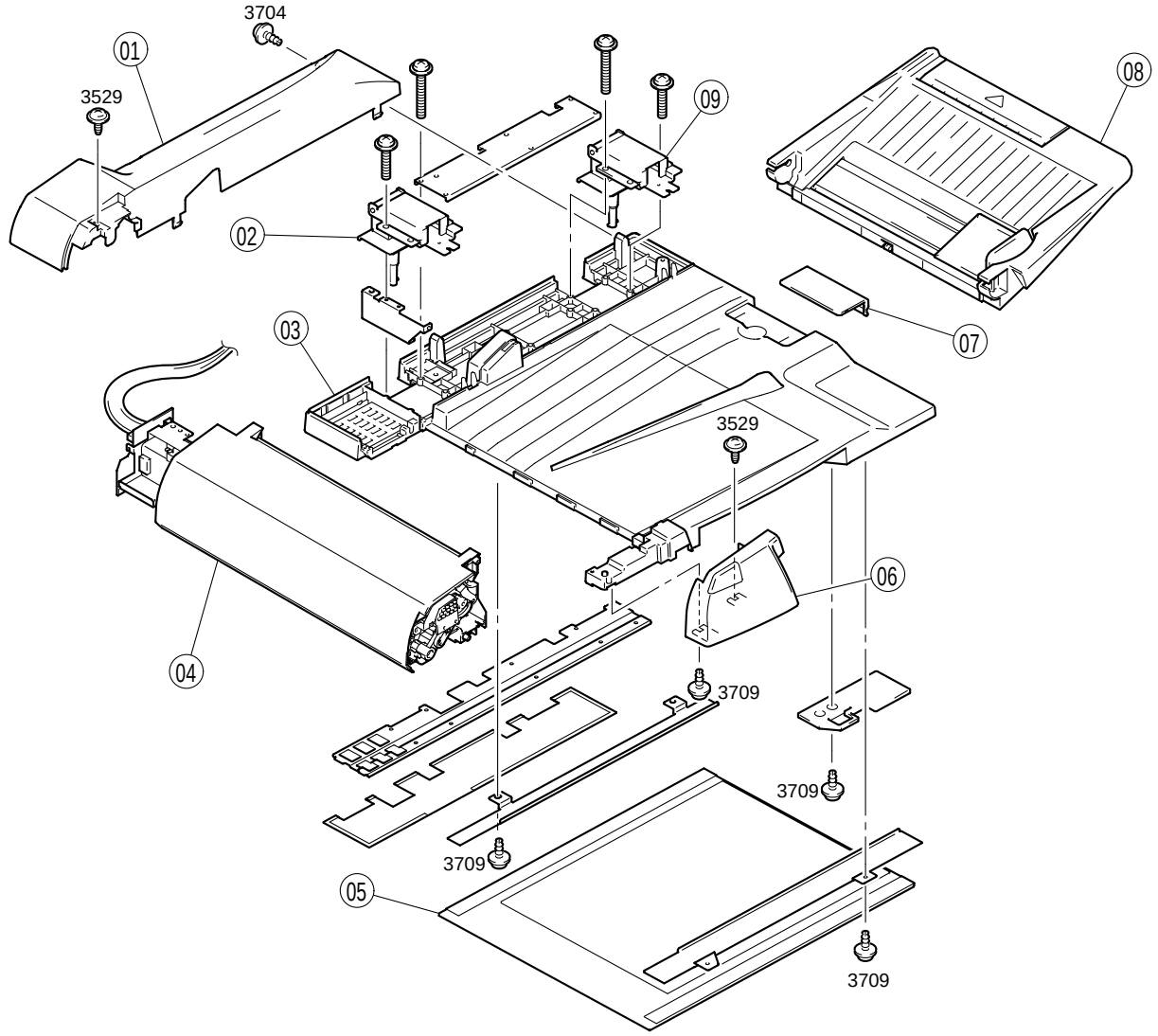
3704
01
3529
09
08
02
03
07
3529
06
04
3709
3709
3709
05
3709

INDEX	PART NO.	PART NAME	QTY	AREA	REMARKS	INDEX	PART NO.	PART NAME	QTY	AREA	REMARKS
01AA	1166-1075-01	COVER	1								
02AA	1166-1087-01	HINGE	1								
03AA	1166-1056-01	COVER	1								
04AA	1166-1128-02	SCANNER UNIT	1								
05AA	1166-1105-01	CUSHION	1								
06AA	1166-1132-02	COVER ASSY	1								
07AA	1166-1108-01	STOPPER	1								
08AA	1166-1129-01	ORIGINAL TRAY	1								
09AA	1166-1088-01	HINGE	1								

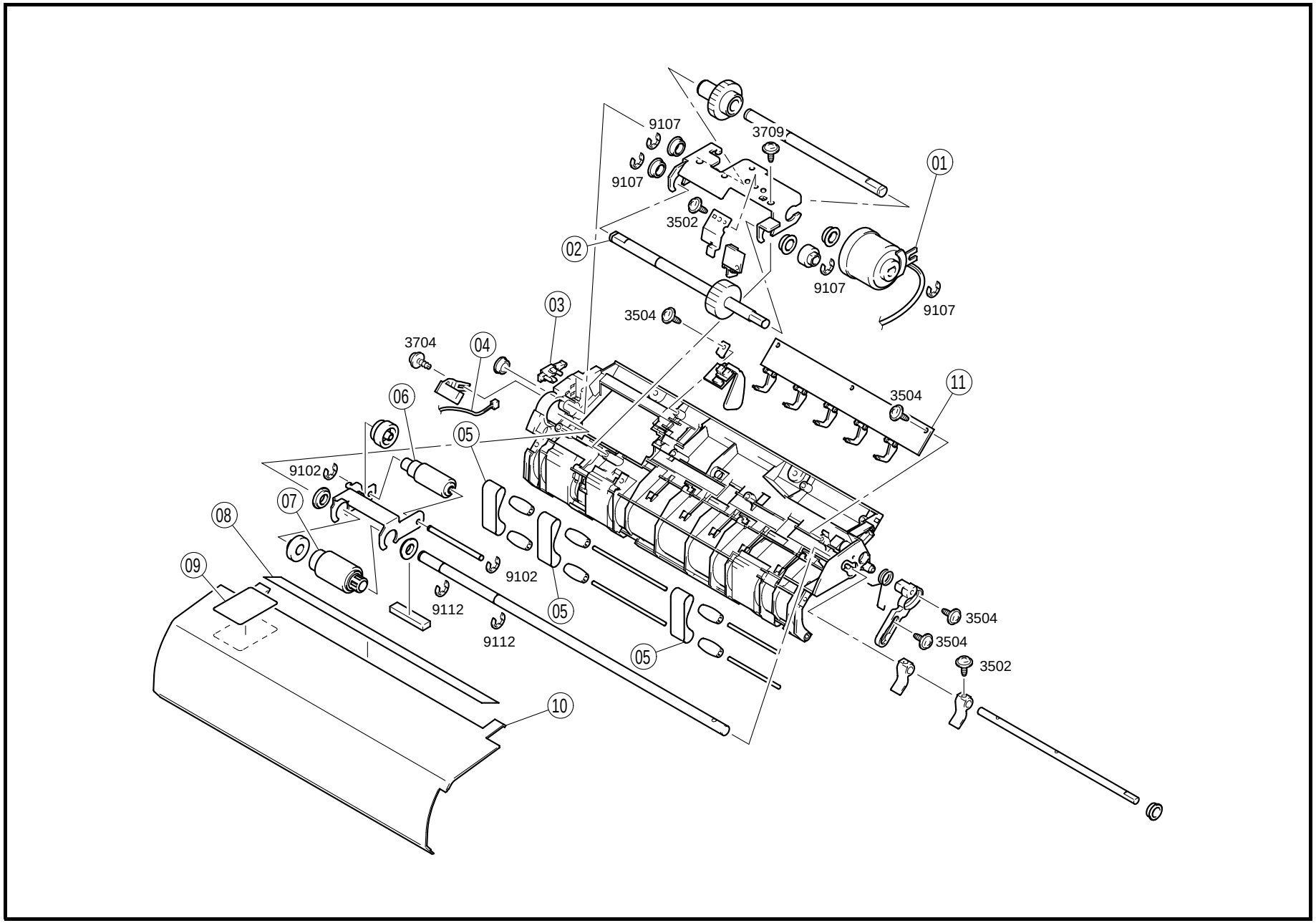
9107
3709
9107
01
3502
02
9107
9107
03
3504
3704
04
3504
11
06
05
9102
07
08
09
9102
9112
9112
05
05
3504
3504
3502
10

INDEX	PART NO.	PART NAME	QTY	AREA	REMARKS	INDEX	PART NO.	PART NAME	QTY	AREA	REMARKS
01AA	1166-1085-01	CLUTCH	1								
02AA	1166-1093-01	ROLLER	1								
03AA	1166-1095-01	MICROSWITCH	1								
04AA	1166-1117-01	HARNESS	1								
05AA	1166-1086-01	TIMING BELT	3								
06AA	1166-1004-01	ROLLER	1								
07AA	1166-1003-01	MAIN ROLLER	1								
08AA	1166-1106-01	LABEL PAPER SIZE	1								
09AA	1166-1107-01	LABEL WARNING	1								
10AA	1166-1054-01	COVER	1								
11AA	1166-1099-01	PWB-SENSOR	1								

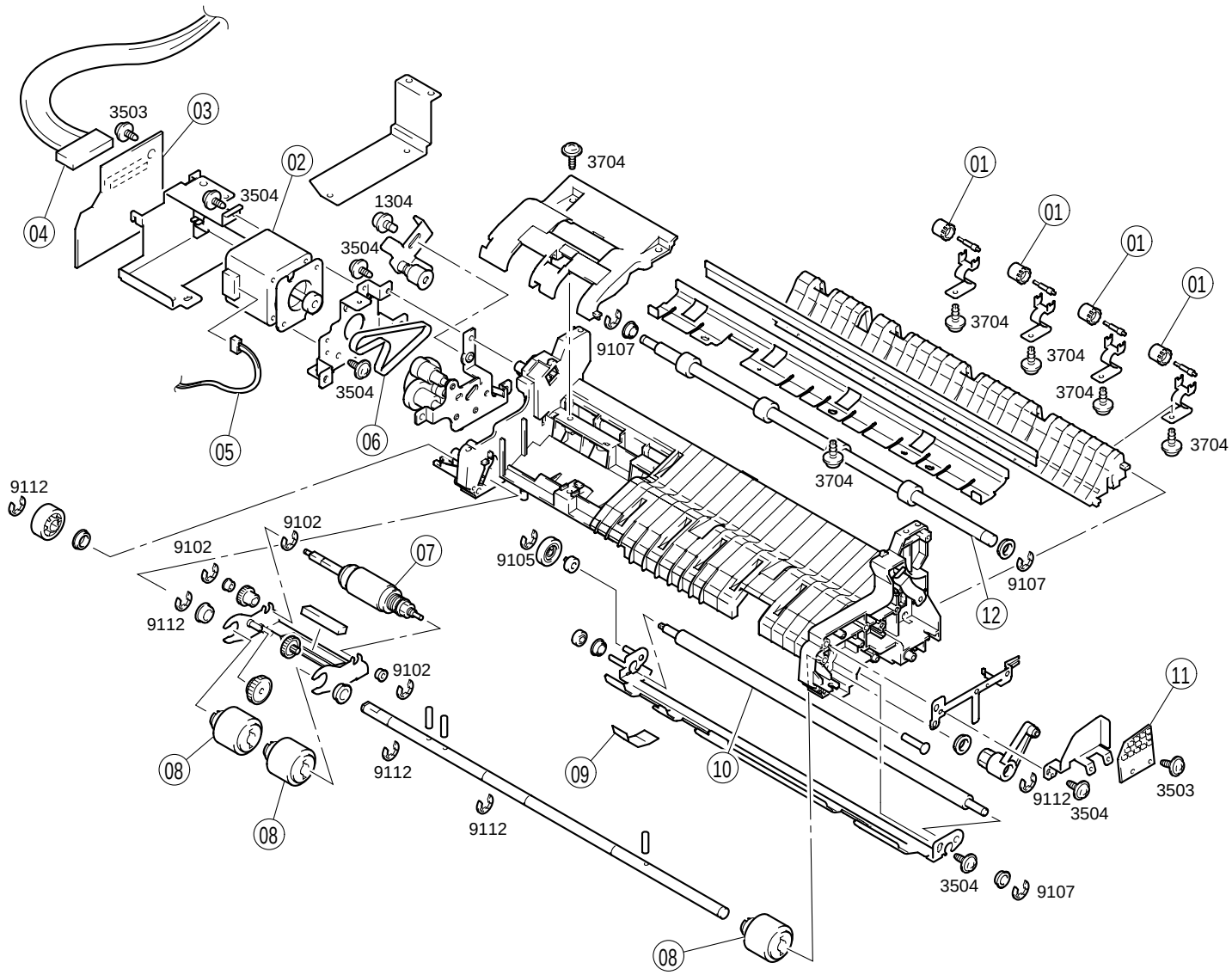
3503
03
04
3504
02
1304
3504
3704
01
01
01
01
3704
3704
3704
3704
9107
3504
05
06
3704
9112
9102
9102
07
9105
9107
12
9112
9102
11
08
9112
09
10
9112
3504
3503
08
9112
3504
9107
08

INDEX	PART NO.	PART NAME	QTY	AREA	REMARKS	INDEX	PART NO.	PART NAME	QTY	AREA	REMARKS
01AA	1166-1002-01	ROLLER	4								
02AA	1166-1114-01	MOTOR	1								
03AA	1166-1021-02	ACR BOARD	1								
04AA	1166-1146-01	HARNESS	1								
05AA	1166-1116-01	HARNESS	1								
06AA	1166-1091-01	TIMING BELT	1								
07AA	1166-1084-01	ROLLER	1								
08AA	1166-1092-01	ROLLER	3								
09AA	1166-1094-01	POLYESTER FILM	1								
10AA	1166-1080-01	ROLLER	1								
11AA	1166-1118-01	PWB-LAMP	1								
12AA	1166-1001-01	ROLLER	1								

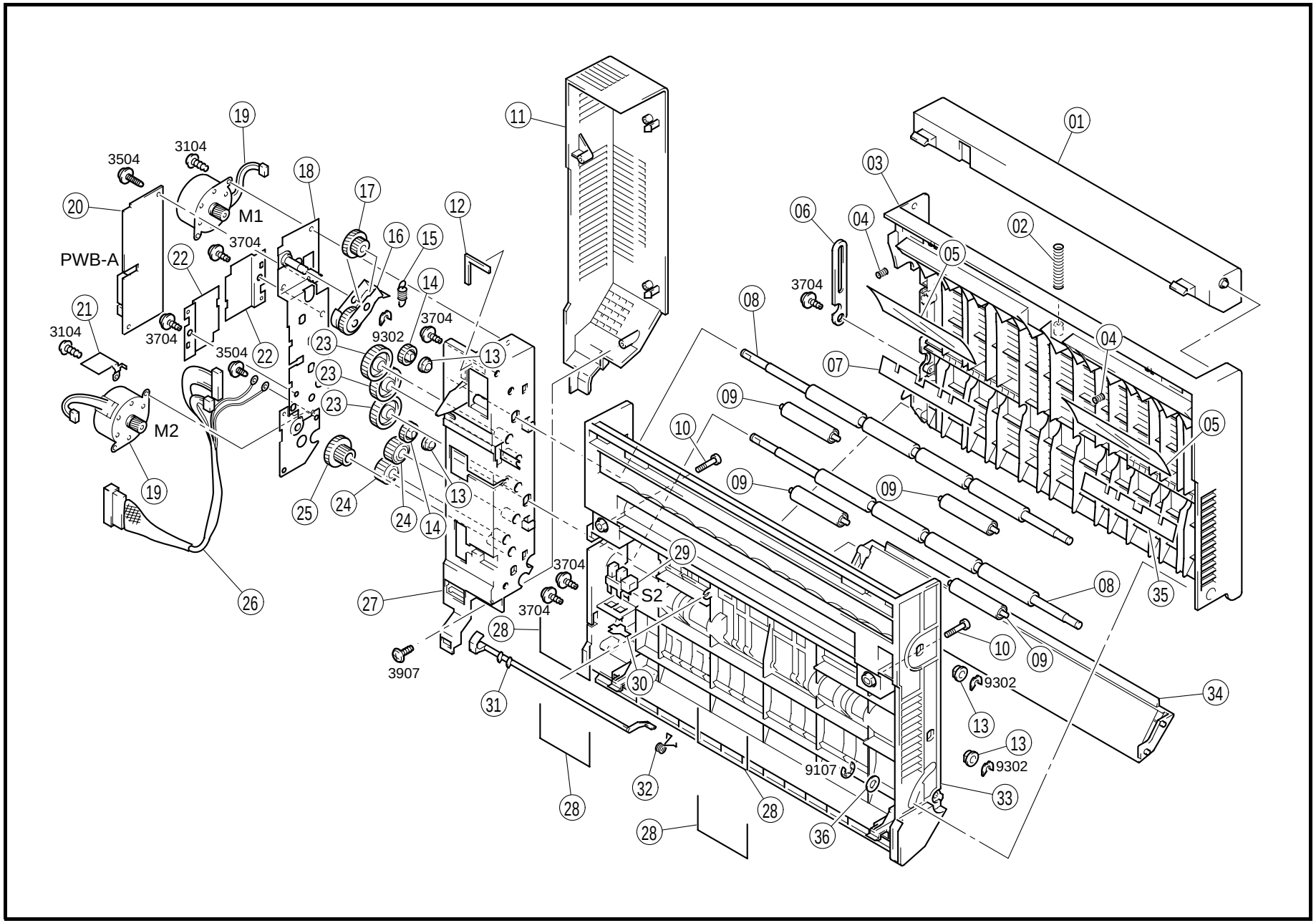
01
02
03
04
05
06
07
08
09
10
11
12
13
14
15
16
17
18
19
20
21
22
23
24
25
26
27
28
29
30
31
32
33
34
35
36
M1
M2
PWB-A
S2
3104
3504
3704
9302
3907
9107

INDEX	PART NO.	PART NAME	QTY	AREA	REMARKS
01AA	4497-3105-02	LEVER	1		
02AA	4497-3106-03	PRESSURE SPRING	1		
03AA	4497-3102-04	COVER	1		
04AA	4497-3110-01	PRESSURE SPRING	2		
05AA	4497-3151-01	POLYESTER FILM	2		
06AA	4497-3109-02	STOPPER	1		
07AA	4497-3153-01	POLYESTER FILM	1		
08AA	4497-3113-02	ROLLER	2		
09AA	4497-3116-01	ROLL	4		
10AA	4497-3108-01	SHOULDER SCREW	2		
11AA	4497-3104-04	COVER	1		
12AA	4497-3157-02	SEAL	1		
13AA	1274-2611-01	BUSHING	4		
14AA	4497-3117-01	GEAR 20T	2		
15AA	4497-3124-01	TENSION SPRING	1		
16AA	4497-0202-01	LEVER	1		
17AA	4497-3121-01	GEAR 12/40T	1		
18AA	4497-0201-02	AXLE PLATE	1		
19AA	9314-1710-72	MOTOR (M1,2)	2		
20AA	4497-0101-03	PW BOARD-A MAIN (PWB-A)	1		
21AA	4497-3156-01	PLATE	1		
22AA	4497-3154-01	PLATE	2		
23AA	4497-3123-01	GEAR 35T	3		
24AA	4497-3119-01	GEAR 24T	2		
25AA	4497-3118-01	GEAR 17/45T	1		
26AA	4497-6801-04	HARNESS	1		
27AA	4497-0751-01	HOLDER	1		
28AA	4497-3114-01	TENSION SPRING	4		
29AA	9335-1510-11	PHOTO INTERRUPTER DOOR SET (S2)	1		
30AA	1136-2131-03	STOPPER	1		
31AA	4497-3133-01	ACTUATOR	1		
32AA	4497-3134-01	TORSION SPRING	1		
33AA	4497-3101-04	FRAME	1		
34AA	4497-3103-01	COVER	1		
35AA	4497-3152-01	POLYESTER FILM	1		
36AA	1200-1446-02	WASHER	1		

INDEX	PART NO.	PART NAME	QTY	AREA	REMARKS

⑴ 	⑹ 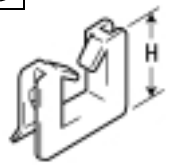	⑾ 					
⑵ 	⑺ 						
⑶ 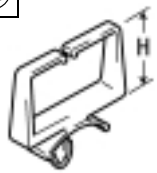	⑻ 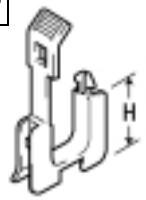						
⑷ 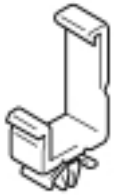	⑼ 						
⑸ 	⑽ 						

INDEX	PART NO.	PART NAME	QTY	AREA	REMARKS	INDEX	PART NO.	PART NAME	QTY	AREA	REMARKS
01AA	9384-1110-61	WIRING SADDLE 21.5H	2								
01BA	9384-1211-01	WIRING SADDLE 19.2H	11								
01CA	9384-1310-11	WIRING SADDLE 5.2H	12								
01DA	9384-1810-91	WIRING SADDLE	8								
02AA	9384-1211-31	WIRING SADDLE 13H	1								
02BA	9384-1810-71	WIRING SADDLE	3								
03AA	9384-1310-81	WIRING SADDLE 6.4H	25								
04AA	9384-1311-01	WIRING SADDLE 27H	4								
05AA	9384-1311-11	CABLE TIE 104L	1								
06AA	9384-2010-21	EDGE COVER 8.5H	8								
07AA	9384-1811-01	CORD CLAMP	5								
07BA	9384-1811-11	CORD CLAMP	6								
07CA	9384-1910-11	CORD CLAMP	8								
08AA	9384-2010-31	EDGE COVER 15.4H	3								
08BA	9384-2010-41	EDGE COVER 25.0H	3								
09AA	9384-2600-11	EDGE COVER 26.0H	1								
10AA	1156-7501-01	HOLDER	1								
11AA	1171-7901-01	JIG SCANNER	1								

INDEX	PART NO.	PART NAME	ILLUST
0510	9752-3014-50	PIN	
1277	9644-2606-13	SCREW	
1304 1305 1308 1309 1315	9646-0306-07 9646-0306-13 9646-0308-13 9646-0310-13 9646-0406-13	SCREW	
1409	9648-0308-21	SCREW	
1603 2703	9654-0306-01 9654-0406-14	SCREW	
3104	9656-0308-13	TAPPING SCREW	
3211	9657-0314-07	TAPPING SCREW	
3334	9732-0434-13	TAPPING SCREW	

INDEX	PART NO.	PART NAME	ILLUST
3435	9733-0330-13	TAPPING SCREW	
3501 3502 3503 3504 3505 3506 3509 3512 3520 3529 3530 3541	9735-0306-13 9735-0308-01 9735-0308-07 9735-0308-13 9735-0310-13 9735-0406-13 9735-0410-13 9735-0306-07 9735-0314-13 9735-0308-08 9735-0312-07 9735-0308-14	TAPPING SCREW	
3702 3703 3704 3708 3709 3720 3727	9739-0410-13 9739-0412-13 9739-0308-13 9739-0308-07 9739-0310-13 9739-0310-07 9739-0308-14	TAPPING SCREW	
3907 3923	9742-0308-13 9742-0310-13	TAPPING SCREW	
4011 4012 4018 4021	9743-0308-13 9743-0306-13 9743-0310-13 9743-0308-14	TAPPING SCREW	
8501	9716-0300-01	WASHER	

INDEX	PART NO.	PART NAME	ILLUST
9102 9105 9107 9112 9140	9721-0200-01 9721-0300-01 9721-0400-01 9721-0600-01 9721-0500-13	RETAINING RING	
9301 9302 9303	1066-1151-01 4425-3001-01 4425-3002-01	RETAINING RING	

PART NO.	FIG.	INDEX	QTY		PART NO.	FIG.	INDEX	QTY		PART NO.	FIG.	INDEX	QTY		PART NO.	FIG.	INDEX	QTY	
0818-7319-01	02	10AA	1		1164-2023-15	12	03AA	1		1164-3044-03	14	15AA	1		1164-5733-01	08	16AA	5	
0993-0105-01	08	11AA	1		1164-2024-03	04	12AA	1		1164-3045-01	14	19AA	1		1164-5734-02	07	33AA	1	
0993-2045-01	13	14AA	4		1164-2026-01	09	34AA	1		1164-3046-01	14	07AA	1		1164-5735-01	07	34AA	1	
0993-3211-01	07	19AA	1		1164-2027-02	09	31AA	1		1164-3047-02	14	03AA	2		1164-5737-01	08	20AA	1	
0993-3220-01	08	22AA	4		1164-2028-01	09	35AA	1		1164-3048-02	14	21AA	1		1164-5738-01	07	43AA	1	
0996-3055-01	04	13AA	1		1164-2036-02	05	12AA	1		1164-3049-02	14	18AA	2		1164-5739-02	08	03AA	2	
0996-3055-01	12	23AA	1		1164-2037-01	05	15AA	1		1164-3050-04	14	11AA	1		1164-5741-04	07	38AA	1	
1075-3091-01	11	07AA	1		1164-2039-01	04	30AA	1		1164-3051-02	12	21AA	1		1164-5742-04	07	14AA	1	
1079-2219-01	12	11AA	2		1164-2041-02	13	39AA	1		1164-3053-01	12	20AA	1		1164-5743-05	07	28AA	1	
1100-1432-01	06	19AA	1		1164-2043-01	05	02AA	1		1164-3054-01	04	09AA	1		1164-5744-01	08	33AA	1	
1100-3132-04	06	27AA	1		1164-2044-01	05	10AA	1		1164-3055-02	14	26AA	1		1164-5749-02	08	01AA	2	
1129-7303-01	04	03AA	2		1164-2045-01	05	07AA	1		1164-3056-01	14	28AA	1		1164-5750-01	08	40AA	1	
1136-2131-03	06	41AA	1		1164-2046-01	05	08AA	1		1164-3061-01	14	30AA	1		1164-5751-02	07	35AA	5	
1136-2131-03	13	02AA	1		1164-2047-03	05	05AA	1		1164-3062-01	14	29AA	1		1164-5755-02	07	37AA	1	
1136-2131-03	18	30AA	1		1164-2049-02	13	43AA	1		1164-3063-04	14	32AA	1		1164-5757-02	08	09AA	1	
1136-5219-01	06	28AA	1		1164-2050-01	05	03AA	1		1164-3064-01	14	12AA	1		1164-5758-02	08	07AA	1	
1136-5220-01	06	17AA	1		1164-2051-01	13	42AA	1		1164-3065-01	14	01AA	2		1164-5761-01	07	05AA	1	
1136-5221-01	06	20AA	1		1164-2054-01	09	37AA	1		1164-3066-01	14	33AA	1		1164-5762-01	07	36AA	7	
1136-5224-01	06	16AA	1		1164-2058-05	11	15AA	1		1164-3067-01	12	04AA	1		1164-5765-01	07	25AA	2	
1136-5228-01	06	11AA	1		1164-2067-03	09	23AA	1		1164-3068-01	14	36AA	1		1164-5769-01	07	09AA	1	
1139-1703-02	01	14AA	3		1164-2070-01	12	19AA	2		1164-3069-01	04	14AA	1		1164-5770-01	08	08AA	1	
1139-1704-14	01	17AA	1		1164-2071-02	09	22AA	1		1164-3071-04	14	27AA	1		1164-5772-01	08	12AA	2	
1139-1705-01	01	08AA	2		1164-2079-01	12	12AA	1		1164-3072-01	12	26AA	1		1164-5776-03	07	04AA	1	
1139-1706-01	01	15AA	1		1164-2080-01	12	07AA	1		1164-3073-02	12	28AA	1		1164-5777-01	08	30AA	2	
1139-5023-01	06	02AA	2		1164-2084-01	09	36AA	1		1164-3074-01	12	24AA	1		1164-5778-01	08	31AA	1	
1149-3444-01	13	30AA	1		1164-2089-01	13	09AA	1		1164-3201-16	09	43AA	1		1164-5779-01	07	26AA	2	
1151-5024-01	06	03AA	1		1164-2093-01	07	24AA	1		1164-3203-03	09	02AA	1		1164-5782-01	08	04AA	2	
1151-5032-01	06	50AA	1		1164-2101-01	11	21AA	1		1164-3204-03	09	03AA	1		1164-5783-01	07	12AA	2	
1151-5610-02	08	14AA	1		1164-2102-01	11	41AA	1		1164-3220-02	09	10AA	1		1164-5785-01	07	44AA	1	
1151-5610-02	08	38AA	1		1164-2116-02	13	03AA	1		1164-3221-01	09	04AA	1		1164-5786-01	07	08AA	1	
1156-7501-01	19	10AA	1		1164-2122-01	01	23AA	1		1164-3222-13	09	05AA	1		1164-5789-03	08	39AA	1	
1164-0105-01	13	07AA	1		1164-2123-01	13	17AA	1		1164-3302-02	12	29AA	1		1164-5790-03	08	10AA	1	
1164-0108-02	12	08AA	1		1164-2150-02	04	18AA	1		1164-3504-03	10	17AA	1		1164-5795-01	08	02AA	2	
1164-0109-01	05	17AA	1		1164-2155-01	12	27AA	1		1164-3505-01	10	22BA	1		1164-5796-01	08	18AA	1	
1164-0109-01	10	35AA	1		1164-2157-02	12	05AA	1		1164-3507-01	10	24AA	1		1164-5797-02	08	17AA	2	
1164-0112-01	13	08AA	1		1164-2165-02	13	18AA	1		1164-3507-01	10	25AA	1		1164-5798-01	08	19AA	1	
1164-0213-03	08	41AA	1		1164-2167-01	05	09AA	2		1164-3508-01	10	31AA	1		1164-5801-06	07	29AA	1	
1164-0214-04	08	06AA	1		1164-2179-01	11	22AA	2		1164-3509-01	10	09AA	4		1164-5803-02	08	25AA	2	
1164-0217-01	04	20AA	1		1164-2203-01	03	16AA	1		1164-3513-01	10	06AA	2		1164-5804-03	08	26AA	1	
1164-0335-01	10	37AA	1		1164-2204-02	02	12AA	1		1164-3514-02	10	28AA	1		1164-5805-03	07	20AA	1	
1164-0533-04	11	23AA	1		1164-2302-02	04	23AA	1		1164-3515-01	10	29AA	1		1164-5806-03	07	17AA	1	
1164-0752-03	07	27AA	1		1164-2306-02	04	22AA	1		1164-3518-01	09	21AA	2		1164-5807-01	07	22AA	1	
1164-0755-01	14	04AA	1		1164-2308-02	04	24AA	1		1164-3521-04	12	02AA	1		1164-5808-02	07	21AA	1	
1164-0756-03	07	07AA	1		1164-2310-01	04	28AA	1		1164-3526-01	09	28AA	1		1164-5809-01	07	16AA	2	
1164-1005-02	07	01AA	1		1164-2314-01	04	02AA	1		1164-3527-02	10	26AA	1		1164-5811-16	07	02AA	1	
1164-1007-01	13	41AA	1		1164-2315-01	04	27AA	1		1164-3529-01	10	36AA	1		1164-5812-12	07	45AA	1	
1164-1012-02	02	01AA	1		1164-2316-01	09	41AA	1		1164-3535-01	12	01AA	1		1164-5815-03	07	41AA	1	
1164-1015-02	02	20AA	1		1164-2513-01	13	36AA	1		1164-3538-01	12	32AA	1		1164-5816-01	07	39AA	1	
1164-1031-01	02	15AA	2		1164-2517-01	13	35AA	1		1164-4201-01	10	13AA	1		1164-5819-01	07	13AA	1	
1164-1032-01	02	03AA	2		1164-2527-01	13	38AA	1		1164-4203-02	10	30AA	1		1164-5829-01	08	24AA	1	
1164-1033-01	09	16AA	1		1164-2530-01	13	37AA	1		1164-4204-03	10	21AA	1		1164-5830-01	08	23AA	2	
1164-1034-01	09	40AA	1		1164-2535-02	13	22AA	1		1164-4205-04	10	18AA	1		1164-5831-01	08	21AA	1	
1164-1035-01	02	08AA	1		1164-2719-01	09	20AA	1		1164-4206-02	10	05AA	2		1164-5840-01	07	15AA	1	
1164-1036-01	02	13AA	1		1164-3001-01	14	31AA	1		1164-4207-01	10	03AA	2		1164-5841-01	07	46AA	1	
1164-1102-02	02	02AA	1		1164-3002-03	14	02AA	1		1164-4209-02	10	02AA	2		1164-6801-04	13	20AA	1	
1164-1117-01	02	17AA	1		1164-3003-01	14	08AA	2		1164-4210-02	10	20AA	1		1164-6802-04	11	18AA	1	
1164-1121-01	01	28AA	1		1164-3004-02	14	10AA	1		1164-4212-01	10	12AA	2		1164-6803-01	04	19AA	1	
1164-1128-01	01	26AA	1		1164-3005-02	14	09AA	1		1164-4213-01	10	16AA	1		1164-6804-02	08	34AA	1	
1164-1133-01	02	18BA	1		1164-3008-03	14	06AA	1		1164-4218-01	10	33AA	1		1164-6805-02	07	11AA	1	
1164-2007-12	09	30AA	1		1164-3009-01	14	05AA	1		1164-4219-02	10	32AA	1		1164-6809-01	13	31AA	1	
1164-2008-12	09	32AA	1		1164-3020-03	13	11AA	1		1164-4220-01	10	34AA	1		1164-6810-02	12	06AA	1	
1164-2009-03	09	33AA	1		1164-3021-01	14	20AA	1		1164-4222-01	10	04AA	2		1164-6811-01	13	16AA	1	
1164-2011-03	09	18AA	1		1164-3022-02	13	06AA	1		1164-4223-02	10	19AA	4		1164-6813-02	11	30AA	1	
1164-2012-02	09	39AA	1		1164-3023-01	13	27AA	1		1164-5704-01	08	36AA	1		1164-6814-01	13	40AA	1	
1164-2013-02	09	17AA	1		1164-3024-03	13	28AA	1		1164-5707-01	08	42AA	1		1164-6815-01	01	25AA	1	
1164-2014-03	09	15AA	1		1164-3026-02	12	18AA	1		1164-5709-01	08	13AA	1		1164-6816-01	09	24AA	1	
1164-2015-01	09	29AA	1		1164-3027-01	12	16AA	1		1164-5719-01	08	43AA	2		1164-7310-01	07	03AA	1	
1164-2017-04	09	38AA	1		1164-3041-05	14	25AA	1		1164-5730-06	07	40AA	1		1164-7316-01	04	33AA	1	
1164-2021-02	04	32AA	1		1164-3042-03	14	16AA	1		1164-5731-05	07	18AA	1		1164-7323-01	13	34AA	1	
1164-2022-06	02	16AA	1		1164-3043-02	14	13AA	1		1164-5732-03	08	35AA	5		1164-7325-01	02	19AA	1	

PART NO.	FIG.	INDEX	QTY		PART NO.	FIG.	INDEX	QTY		PART NO.	FIG.	INDEX	QTY		PART NO.	FIG.	INDEX	QTY	
1164-7328-01	07	42AA	1		1165-5327-03	06	51AA	1		1166-1117-01	16	04AA	1		1171-6203-01	11	19AA	1	
1164-7341-01	14	23AA	1		1165-5328-01	06	23AA	1		1166-1118-01	17	11AA	1		1171-6204-01	11	29AA	4	
1164-7343-02	14	14AA	1		1165-5329-01	06	24AA	1		1166-1128-02	15	04AA	1		1171-6802-01	03	17AA	1	
1164-7344-01	14	17AA	1		1165-5330-01	06	39AA	1		1166-1129-01	15	08AA	1		1171-6804-01	11	11AA	1	
1164-7345-01	14	22AA	1		1165-5331-01	06	42AA	1		1166-1132-02	15	06AA	1		1171-6805-01	03	04AA	1	
1164-7346-01	14	37BA	1		1165-5332-02	06	13AA	1		1166-1142-01	03	03AA	1		1171-6806-01	01	29AA	1	
1164-7471-02	09	01BA	1		1165-5334-01	06	43AA	2		1166-1144-01	01	18AA	1		1171-6807-01	03	17BA	1	
1164-7472-02	09	01AA	1		1165-5335-01	06	49AA	1		1166-1145-01	03	02AA	1		1171-6808-01	03	08AA	1	
1165-0161-05	13	32AA	1		1165-5712-01	08	14BA	1		1166-1146-01	17	04AA	1		1171-7314-01	02	06AA	1	
1165-0231-06	07	30AA	1		1165-5713-01	08	05AA	2		1166-1147-01	01	19AA	1		1171-7315-01	02	06BA	1	
1165-0340-03	06	10AA	2		1165-5746-03	07	14BA	1		1166-1148-01	01	19BA	1		1171-7317-01	11	36AA	1	
1165-0751-01	04	05AA	1		1165-5759-01	08	32AA	1		1166-1151-01	03	01AA	1		1171-7362-01	01	32AA	1	
1165-0752-01	04	01AA	1		1165-5760-01	08	27AA	1		1166-1154-01	11	10AA	1		1171-7901-01	19	11AA	1	
1165-0753-01	10	01AA	1		1165-6801-01	13	20BA	1		1166-1157-01	03	01BA	1		1200-1411-01	09	25AA	2	
1165-0755-01	09	14AA	1		1165-6803-01	04	06AA	1		1170-0101-03	11	31AA	1		1200-1436-01	06	45AA	1	
1165-1009-01	02	04AA	1		1165-6806-03	10	11AA	1		1170-0110-02	11	31BA	1		1200-1446-02	18	36AA	1	
1165-1011-02	02	14AA	1		1165-6807-04	12	14AA	1		1170-0237-13	12	10BA	1		1200-1461-08	10	07AA	1	
1165-1113-03	02	11AA	1		1165-6808-03	12	30AA	1		1170-0238-13	12	10AA	1		1200-1462-01	14	35AA	1	
1165-2029-01	12	09AA	1		1165-6809-01	04	29AA	1		1170-0321-01	07	48BA	1		1200-2105-05	04	16AA	1	
1165-2031-01	06	22AA	1		1165-6810-04	12	13AA	1		1170-0322-01	07	48AA	1		1200-2105-06	04	21AA	2	
1165-2032-01	06	22BA	1		1165-6811-06	13	24AA	1		1170-2539-01	13	23AA	1		1200-3221-06	06	15AA	2	
1165-2033-02	05	01AA	1		1165-6812-02	11	12AA	1		1170-3015-01	14	24AA	1		1200-3231-05	13	21AA	2	
1165-2040-02	04	31AA	1		1165-6815-01	06	14AA	1		1170-3449-01	12	31AA	1		1200-5212-04	04	26AA	1	
1165-2055-03	05	23AA	1		1165-6832-01	04	15AA	1		1170-3531-01	09	19AA	1		1200-5213-04	04	25AA	1	
1165-2056-02	05	21AA	1		1165-7312-02	02	05AA	1		1170-3533-02	10	22AA	1		1274-2611-01	07	23AA	2	
1165-2057-01	05	22AA	2		1165-7347-01	14	37AA	1		1170-3534-01	10	23AA	1		1274-2611-01	09	44AA	1	
1165-2065-02	05	29AA	1		1165-7801-01	11	17BA	1		1170-3536-01	09	27AA	1		1274-2611-01	18	13AA	4	
1165-2073-01	13	44AA	1		1165-7802-01	02	09AA	1		1170-5701-01	08	36BA	1		1300-3251-17	06	18AA	1	
1165-2081-05	04	11AA	1		1166-1001-01	17	12AA	1		1170-5842-01	07	47AA	1		1400-1122-04	04	04AA	3	
1165-2085-02	05	19AA	1		1166-1002-01	17	01AA	4		1170-6601-03	11	32AA	1		1400-2142-13	06	44AA	1	
1165-2087-04	05	04AA	1		1166-1003-01	16	07AA	1		1171-0122-01	11	02AA	1		1500-2660-13	10	08AA	2	
1165-2090-01	05	11AA	1		1166-1004-01	16	06AA	1		1171-0124-01	11	06BA	1		1500-2660-13	14	34AA	2	
1165-2091-01	05	18AA	1		1166-1005-01	03	15AA	1		1171-0125-01	11	06AA	1		4108-3414-02	12	25AA	1	
1165-2092-01	05	16AA	1		1166-1007-01	03	26AA	1		1171-0167-02	01	19CA	1		4156-3826-01	04	08AA	2	
1165-2105-02	12	22AA	1		1166-1012-02	11	03AA	1		1171-0168-02	01	19DA	1		4470-4024-01	07	06AA	1	
1165-2119-01	11	38AA	1		1166-1014-02	11	04AA	1		1171-1122-01	01	06AA	2		4470-4024-01	09	07AA	1	
1165-2317-01	13	33AA	1		1166-1020-02	03	09AA	1		1171-1125-01	01	12AA	1		4470-4024-01	10	15AA	1	
1165-2592-01	13	26AA	2		1166-1021-02	17	03AA	1		1171-1126-01	01	13AA	1		4497-0101-03	18	20AA	1	
1165-2596-01	13	25AA	2		1166-1054-01	16	10AA	1		1171-1131-01	02	18AA	1		4497-0201-02	18	18AA	1	
1165-2701-02	07	32AA	1		1166-1056-01	15	03AA	1		1171-1201-01	01	01AA	1		4497-0202-01	18	16AA	1	
1165-2702-01	07	31AA	3		1166-1067-01	03	12AA	1		1171-1202-01	01	22AA	1		4497-0751-01	18	27AA	1	
1165-2703-01	04	07AA	1		1166-1075-01	15	01AA	1		1171-1203-01	01	09AA	1		4497-3101-04	18	33AA	1	
1165-2704-01	05	06AA	1		1166-1080-01	17	10AA	1		1171-1204-01	01	11AA	1		4497-3102-04	18	03AA	1	
1165-2705-01	11	20AA	1		1166-1081-01	03	23AA	1		1171-1205-01	01	30AA	1		4497-3103-01	18	34AA	1	
1165-2711-01	05	14AA	1		1166-1082-01	03	05AA	1		1171-1206-01	01	07AA	1		4497-3104-04	18	11AA	1	
1165-4305-02	05	25AA	1		1166-1083-01	03	22AA	1		1171-1207-01	01	27AA	1		4497-3105-02	18	01AA	1	
1165-4307-01	05	26AA	1		1166-1084-01	17	07AA	1		1171-1208-01	01	20AA	1		4497-3106-03	18	02AA	1	
1165-4308-02	05	28AA	2		1166-1085-01	16	01AA	1		1171-1209-01	01	10AA	1		4497-3108-01	18	10AA	2	
1165-4310-01	05	24AA	1		1166-1086-01	16	05AA	3		1171-1210-01	01	21AA	1		4497-3109-02	18	06AA	1	
1165-5302-02	06	12AA	1		1166-1087-01	15	02AA	1		1171-1212-02	01	31AA	1		4497-3110-01	18	04AA	2	
1165-5303-03	06	26AA	1		1166-1088-01	15	09AA	1		1171-1318-01	01	18BA	1		4497-3113-02	18	08AA	2	
1165-5304-02	06	40AA	1		1166-1091-01	17	06AA	1		1171-1321-01	01	03AA	4		4497-3114-01	18	28AA	4	
1165-5305-01	06	30AA	1		1166-1092-01	17	08AA	3		1171-2128-01	11	35AA	1		4497-3116-01	18	09AA	4	
1165-5306-02	06	35AA	1		1166-1093-01	16	02AA	1		1171-2129-01	11	26AA	1		4497-3117-01	18	14AA	2	
1165-5307-02	06	34AA	1		1166-1094-01	17	09AA	1		1171-2130-01	05	13AA	1		4497-3118-01	18	25AA	1	
1165-5308-01	06	37AA	1		1166-1095-01	16	03AA	1		1171-2131-01	04	10AA	1		4497-3119-01	18	24AA	2	
1165-5309-02	06	36AA	1		1166-1097-01	03	10AA	1		1171-2133-01	11	28AA	3		4497-3121-01	18	17AA	1	
1165-5310-01	06	33AA	1		1166-1098-01	03	06AA	1		1171-2134-01	11	27AA	1		4497-3123-01	18	23AA	3	
1165-5311-01	06	32AA	2		1166-1099-01	16	11AA	1		1171-2169-01	11	37AA	2		4497-3124-01	18	15AA	1	
1165-5312-01	06	31AA	1		1166-1100-01	03	25AA	1		1171-2183-02	11	01AA	1		4497-3133-01	18	31AA	1	
1165-5313-03	06	09AA	2		1166-1101-01	03	20AA	1		1171-2184-02	11	01BA	1		4497-3134-01	18	32AA	1	
1165-5314-02	06	08AA	1		1166-1102-01	03	11AA	1		1171-2410-01	03	13AA	1		4497-3151-01	18	05AA	2	
1165-5315-02	06	06AA	2		1166-1103-01	03	24AA	1		1171-2412-01	03	07AA	1		4497-3152-01	18	35AA	1	
1165-5316-02	06	07AA	1		1166-1105-01	15	05AA	1		1171-2413-01	03	19AA	1		4497-3153-01	18	07AA	1	
1165-5317-02	06	04AA	2		1166-1106-01	16	08AA	1		1171-2414-01	01	02AA	6		4497-3154-01	18	22AA	2	
1165-5319-01	06	38AA	1		1166-1107-01	16	09AA	1		1171-2415-01	03	14AA	1		4497-3156-01	18	21AA	1	
1165-5323-01	06	01AA	1		1166-1108-01	15	07AA	1		1171-2417-01	01	04AA	1		4497-3157-02	18	12AA	1	
1165-5324-03	06	46AA	1		1166-1114-01	17	02AA	1		1171-2418-01	01	05AA	1		4497-6801-04	18	26AA	1	
1165-5325-01	06	48AA	3		1166-1115-01	03	21AA	1		1171-6201-01	11	39AA	1		4603-0751-01	09	09AA	1	
1165-5326-02	06	47AA	1		1166-1116-01	17	05AA	1		1171-6202-01	11	40AA	1		4603-3202-01	09	06AA	1	

PART NO.	FIG.	INDEX	QTY		PART NO.	FIG.	INDEX	QTY		PART NO.	FIG.	INDEX	QTY		PART NO.	FIG.	INDEX	QTY	
4603-3205-01	09	49AA	1		9384-1910-11	19	07CA	8											
4603-3206-01	09	42AA	1		9384-2010-21	19	06AA	8											
4603-3207-01	09	46AA	4		9384-2010-31	19	08AA	3											
4603-3211-01	09	08AA	1		9384-2010-41	19	08BA	3											
4603-3214-01	09	48AA	1		9384-2310-41	13	15AA	1											
4603-3216-04	09	13AA	1		9384-2600-11	19	09AA	1											
4603-3218-01	09	45AA	4																
4603-6801-04	09	12AA	1																
4603-7477-01	09	50AA	1																
9313-1710-51	05	20AA	1																
9313-1710-51	06	21AA	1																
9313-1710-51	09	26AA	1																
9313-1710-61	13	10AA	1																
9313-1810-41	13	10BA	1																
9314-1710-72	18	19AA	2																
9314-2710-72	13	12AA	1																
9314-2710-82	13	05AA	1																
9322-1710-21	09	11AA	1																
9322-1710-42	10	10AA	1																
9322-1710-51	13	29AA	1																
9323-1410-11	01	24AA	1																
9325-1810-24	12	15AA	1																
9325-2710-33	11	14AA	1																
9325-2710-44	11	14BA	1																
9325-2710-62	02	07AA	1																
9326-1510-41	13	19AA	1																
9326-2820-11	01	16AA	1																
9326-2900-06	06	29AA	1																
9331-2710-11	13	04AA	1																
9332-5710-21	04	17AA	1																
9334-1710-42	08	28AA	1																
9334-2710-11	06	25AA	1																
9335-1510-11	06	05AA	1																
9335-1510-11	07	10AA	1																
9335-1510-11	09	47AA	1																
9335-1510-11	10	27AA	1																
9335-1510-11	12	17AA	1																
9335-1510-11	13	01AA	2																
9335-1510-11	18	29AA	1																
9346-3320-61	03	18AA	1																
9346-3510-11	11	34AA	2																
9346-3610-31	11	16BA	1																
9346-3710-21	11	33AA	2																
9346-3810-31	08	29AA	1																
9346-3810-61	11	17AA	1																
9346-3810-71	11	13AA	2																
9346-3810-81	11	16AA	1																
9351-1810-21	05	27AA	1																
9352-2711-32	08	37AA	1																
9352-2711-42	08	37BA	1																
9372-2710-12	08	15AA	1																
9372-2710-21	10	14AA	1																
9381-4310-81	13	13BA	1																
9381-4610-31	13	13AA	1																
9384-1110-61	19	01AA	2																
9384-1211-01	19	01BA	11																
9384-1211-31	19	02AA	1																
9384-1310-11	19	01CA	12																
9384-1310-81	19	03AA	25																
9384-1311-01	19	04AA	4																
9384-1311-11	19	05AA	1																
9384-1610-11	11	25AA	1																
9384-1621-21	11	24AA	2																
9384-1810-31	11	05AA	2																
9384-1810-41	11	08AA	2																
9384-1810-71	19	02BA	3																
9384-1810-91	19	01DA	8																
9384-1811-01	19	07AA	5																
9384-1811-11	19	07BA	6																
9384-1900-56	11	09AA	3																



Copyright
1999 MINOLTA Co., Ltd.
Printed in Japan

1170-7995-21 99032850