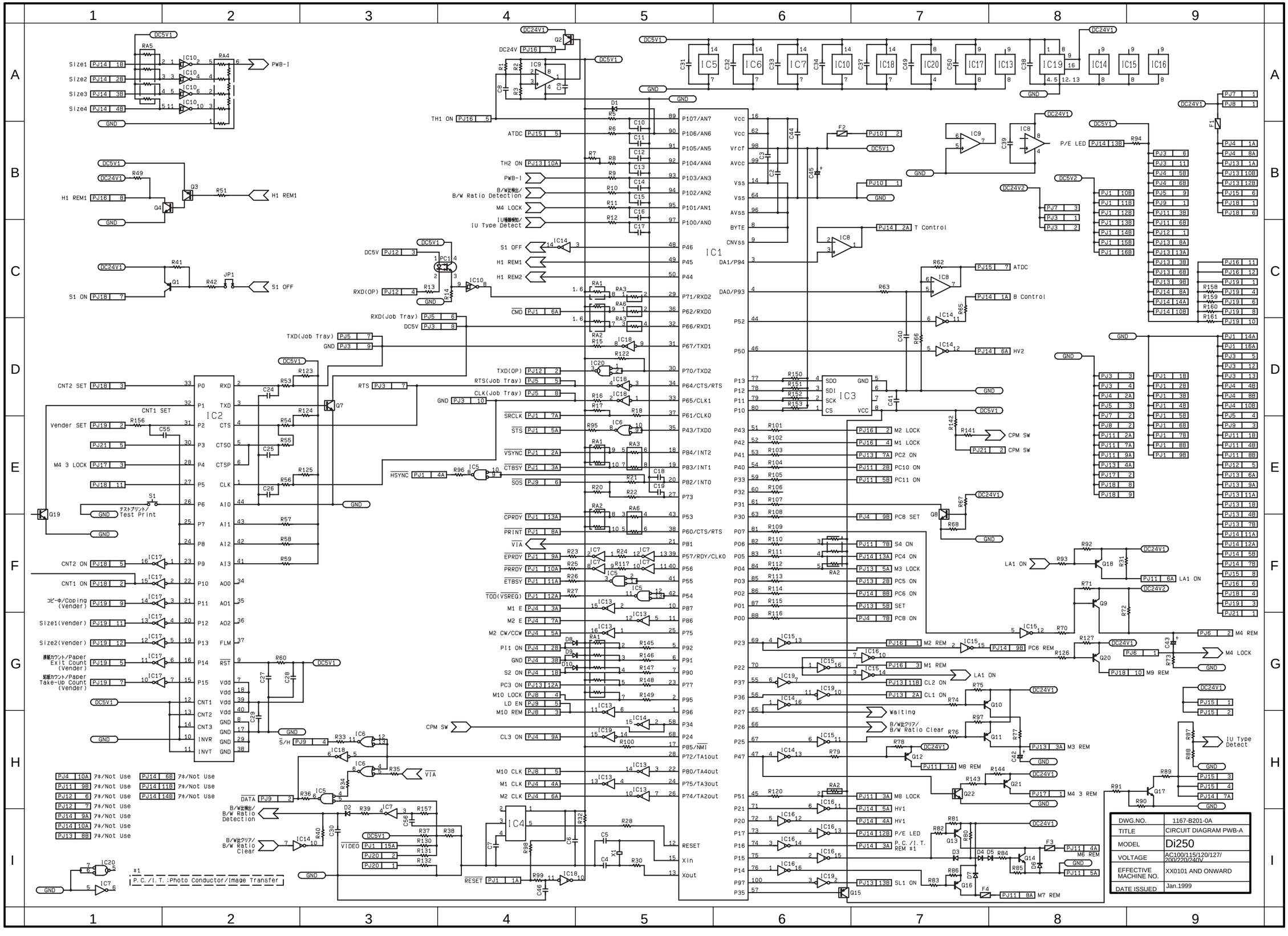
DWG.NO. 1167-B201-0A
TITLE CIRCUIT DIAGRAM PWB-A
MODEL Di250
VOLTAGE AC100/115/120/127/200/220/240V
EFFECTIVE MACHINE NO. XX0101 AND ONWARD
DATE ISSUED Jan.1999
IC1
IC2
IC3
IC4
IC5
IC6
IC7
IC8
IC9
IC10
IC13
IC14
IC15
IC16
IC17
IC18
IC19
IC20
P/E LED
T Control
B Control
ATDC
HV2
CPM SW
M2 LOCK
M1 LOCK
PC2 ON
PC10 ON
PC11 ON
PC8 SET
S4 ON
PC4 ON
M3 LOCK
PC5 ON
PC6 ON
SET
PC8 ON
SL1 ON
M2 REM
PC6 REM
M1 REM
CL2 ON
CL1 ON
Waiting
M8 REM
M8 LOCK
HV1
HV1
P/E LED
P.C./I.T. REM #1
M7 REM
M6 REM
M4 3 LOCK
M4 REM
M4 LOCK
M9 REM
LA1 ON
IU Type Detect
Test Print
Vender SET
CNT1 SET
CNT2 SET
M4 3 LOCK
CNT2 ON
CNT1 ON
Size1(Vender)
Size2(Vender)
S1 OFF
H1 REM1
H1 REM2
TH1 ON
TH2 ON
PWB-I
M10 LOCK
LD EN
M10 REM
S2 ON
PC3 ON
PI1 ON
M1 E
M2 E
M2 CW/CCW
M10 CLK
M1 CLK
M2 CLK
RESET
Xin
Xout
VIA
CPM SW
CL3 ON
RXD(OP)
TXD(OP)
RTS(Job Tray)
CLK(Job Tray)
RXD(Job Tray)
TXD(Job Tray)
RTS
CLK1
CLK0
TXD0
INT2
INT1
INT0
RDY/CLK0
TA1out
TA0out
TA1out
TA0out
RXD2
RXD0
RXD1
TXD1
TXD2
CTS/RTS
DC24V
DC5V
DC5V1
DC24V1
DC5V2
DC24V2
GND
PWB-I
S1 ON
S1 OFF
H1 REM1
H1 REM1
CNT2 SET
CNT1 SET
Vender SET
M4 3 LOCK
CNT2 ON
CNT1 ON
Size1(Vender)
Size2(Vender)
Size1
Size2
Size3
Size4
TH1 ON
TH2 ON
ATDC
B/W Ratio Detection
M4 LOCK
IU Type Detect
CMD
DATA
SRCLK
STS
VSYNC
CTBSY
SOS
HSYNC
CPRDY
PRINT
VIA
EPRDY
PRRDY
ETBSY
TOD(VSREQ)
S/H
VIDEO
RESET
Test Print
B/W Ratio Detection
B/W Ratio Clear
Waiting
LA1 ON
M4 REM
M4 LOCK
M4 3 LOCK
M8 REM
M8 LOCK
M7 REM
M6 REM
CPM SW
M2 LOCK
M1 LOCK
PC2 ON
PC10 ON
PC11 ON
PC8 SET
S4 ON
PC4 ON
M3 LOCK
PC5 ON
PC6 ON
SET
PC8 ON
SL1 ON
M2 REM
PC6 REM
M1 REM
CL2 ON
CL1 ON
M3 REM
HV2
ATDC
B Control
T Control
P/E LED
LA1 ON
IU Type Detect
M9 REM
P.C./I.T. :Photo Conductor/Image Transfer
ｱ#/Not Use
ｱ#/Not Use
ｱ#/Not Use