Di250

SWITCHES ON PWBs, TECH. REP. SETTINGS



MINOLTA

17196

CONTENTS

1. PRECAUTIONS FOR HANDLING THE PWBs S-1
1-1. Precautions for Transportation and Storage S-1
1-2. Precautions for Replacement and Inspection S-1
2. CONTROL PANEL KEYS AND TOUCH PANEL S-2
2-1. Control Panel Keys S-2
2-2. Explanation of the Touch Panel S-3
(1) Basic Screen S-3
(2) Warning Screens S-4
3. FUNCTION OF SWITCHES AND OTHER PARTS ON PWBs S-5
3-1. PWB Location S-5
3-2. PWB-A (Master Board) S-5
3-3. UN1 (Control Panel) S-6
3-4. PWB-L (PPM Switching Board) S-6
3-5. UN2 (MFB Board) S-7
4. USER'S CHOICE MODE S-9
4-1. User's Choice Selection Screen S-9
4-2. User's Choice Function Setting Procedure S-9
4-3. User's Choice Function Tree S-10
4-4. Settings in the User's Choice Mode S-11
5. TECH. REP. MODE S-16
5-1. Tech. Rep. Mode Menu Screen S-16
5-2. Tech. Rep. Mode Function Setting Procedure S-16
5-3. Tech. Rep. Mode Setting Tree S-17
5-4. Settings in the Tech. Rep. Mode S-18
(1) Tech. Rep. Choice S-18
(2) System Input S-22
(3) Administrator # Input S-23
(4) Counter S-23
(5) Function S-28
(6) I/O Check S-29
(7) Movement Check S-30
(8) RD Mode (SMART) S-31
(9) ROM Version S-33
(10) Level History S-34
6. SECURITY MODE S-35
6-1. Security Mode Menu Screen S-35
6-2. Security Mode Function Setting Procedure S-35
6-3. Settings in the Security Mode S-36
7. ADJUST MODE S-39
7-1. Adjust Mode Menu Screen S-39
7-2. Adjust Mode Function Setting Procedure S-39
7-3. Adjust Mode Function Tree S-40
7-4. Settings in the Adjust Mode S-40
(1) Printer S-40
(2) IR S-41
8. INITIAL MODE S-42

8-1. Initial Mode Menu Screen S-42
8-2. Initial Mode Function Setting Procedure S-42
8-3. Settings in the Initial Mode S-43

1 PRECAUTIONS FOR HANDLING THE PWBs

1-1. Precautions for Transportation and Storage

- Before transporting or storing the PWBs, put them in protective conductive cases or bags so that they are not subjected to high temperature and are not exposed to direct sunlight.
- Protect the PWBs from any external force so that they are not bent or damaged.
- Once the PWB has been removed from its conductive case or bag, never place it directly on an object that is easily charged with static electricity (such as a carpet or plastic bag).
- Do not touch the parts and printed patterns on the PWBs with bare hands.

1-2. Precautions for Replacement and Inspection

- Whenever replacing the PWB, make sure that the power cord of the copier has been unplugged.
- When the power is on, the connectors should never be plugged in or unplugged.
- Use care not to strap the pins of an IC with a metal tool.
- When touching the PWB, wear a wrist strap and connect its cord to a securely grounded place whenever possible. If you cannot wear a wrist strap, touch the metal part to discharge static electricity before touching the PWB.

2 CONTROL PANEL KEYS AND TOUCH PANEL

✻ For more details, see the Operator's Manual shipped with the copier.

2-1. Control Panel Keys

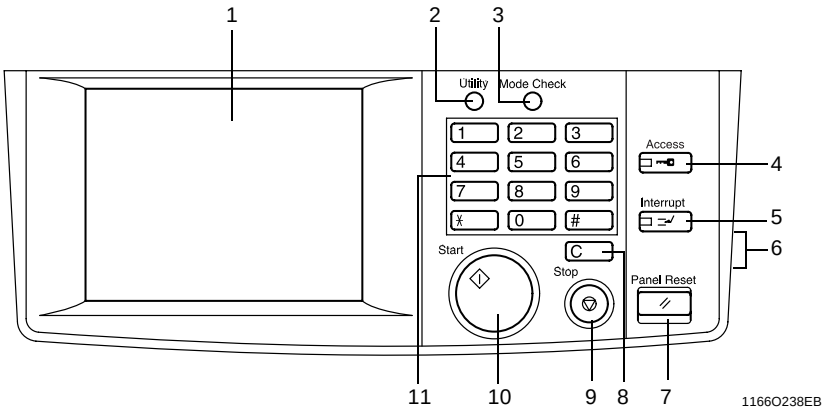

1. Touch Panel
- Shows various screens and messages.

2. Utility Key
- Press to show the User Mode menu.

3. Mode Check Key
- Shows the Mode Check screen on which the user can check the current copying settings.

4. Access Mode Key
- Used to enter the access number. After the access number has been entered, pressing this key will allow the user to make copies.

5. Interrupt Key
- Sets the copier into, or lets it leave, the Interrupt mode.

6. Display Contrast Knob
- Turn to vary the brightness of the Touch Panel.

7. Panel Reset Key
- Clears all settings made on the control panel, setting the copier back into the initial mode.
- Cancels currently reserved jobs.

✻ It does not clear the zoom ratios and job settings stored in memory and Interrupt mode.

8. Clear Key
- Clears the number-of-copies setting, zoom ratio, and counter count.
- Cancels the image data read.

9. Stop Key
- Press to stop a scanning cycle.
- Press to stop a print cycle.

10. Start Key
- Press to start the document scanning sequence.
- Press to start a print cycle.

11. 10-key Pad
- Numeric key pad used for entering the number of copies to be made, zoom ratio, access number, and the Tech. Rep. mode settings.

2-2. Explanation of the Touch Panel

(1) Basic Screen

- The Basic screen is the initial screen that appears when the copier panel is reset or auto reset is activated.

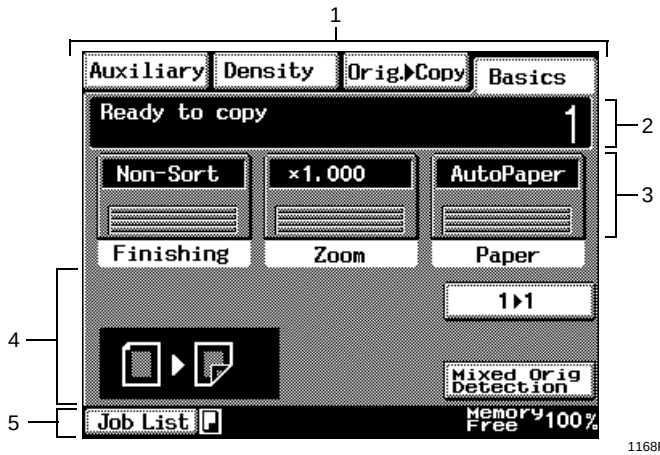

1. Supplementary Function Key
- Selects the corresponding menu screen, either Auxiliary, Density, Orig. ▶ Copy, or Basics.

2. Message Display
- Shows the current copier status, operating instructions, caution/warning messages, and other data including the number of copies selected.

3. Basic Function Keys
- Allows the user to select the finishing, zoom ratio, and copy paper.

4. Function Display
- Shows graphic representations of the settings currently made for Orig. ▶ Copy and Finishing.

5. Status Display
- Shows what is being done with the current job and other data.

(2) Warning Screens

- The warning screen may be a malfunction display, error display, warning display, or a caution display.

<Malfunction Display>

- A malfunction display is given when trouble occurs which cannot be corrected by the user.

Example: Malfunctions that can be identified with a specific code.

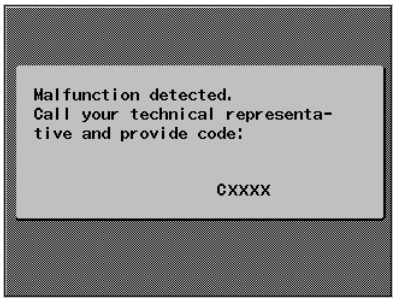

1171S001CB

<Error Display>

- An error display is given when trouble occurs which can be corrected by the user.

Example: Paper misfeed, toner empty, door open.

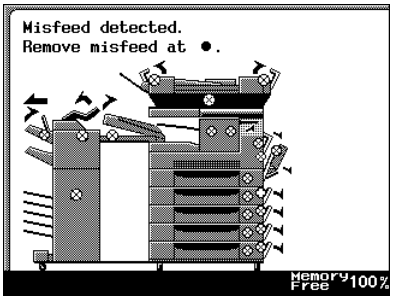

1168P167CD

<Warning Display>

- A warning display is given when any further copier operation will not be possible, or only a defective copy will be produced, because of erroneous or illegal panel settings or other cause.

Example: Unmatched paper size in Auto Paper.

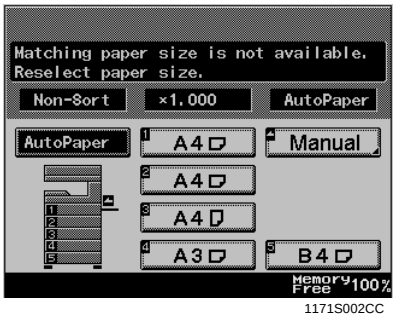

1171S002CC

<Caution Display>

- A caution display is given when, though further copier operation will be possible, it could result in a malfunction.

Example: Install new Imaging Cartridge.

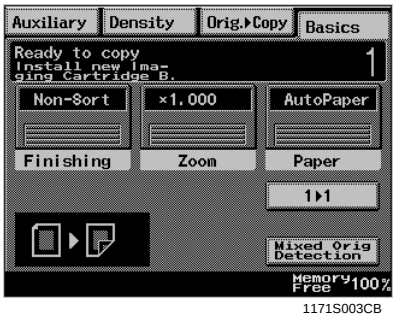

1171S003CB

3 FUNCTION OF SWITCHES AND OTHER PARTS ON PWBs

3-1. PWB Location

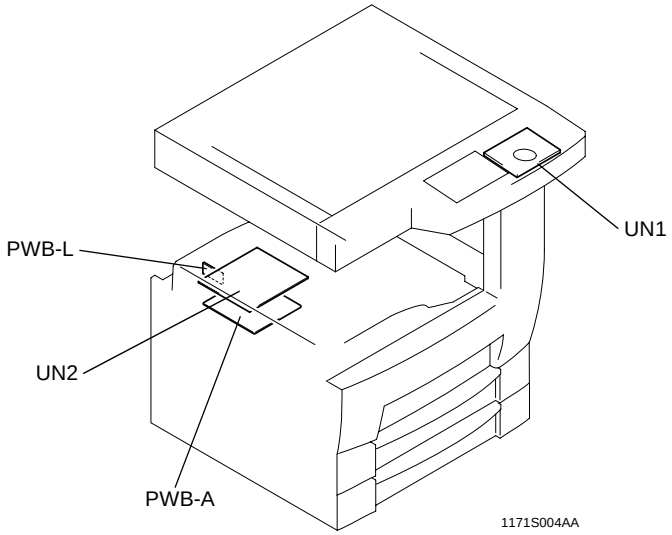

3-2. PWB-A (Master Board)

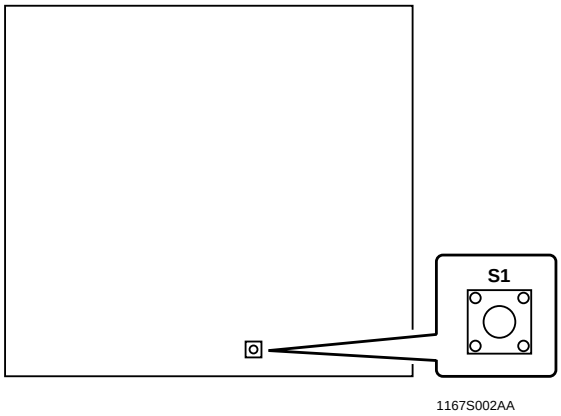

Symbol	Name	Description
S1	Test Print Switch	Used to run a test print cycle.

3-3. UN1 (Control Panel)

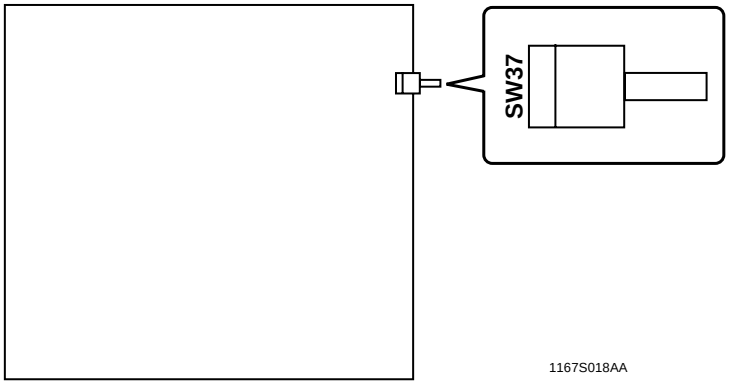

Symbol	Name	Description
SW37	Warm Restart Switch	• Used to enter the initial mode. • Used to restart the copier after a breakdown.

3-4. PWB-L (PPM Switching Board)

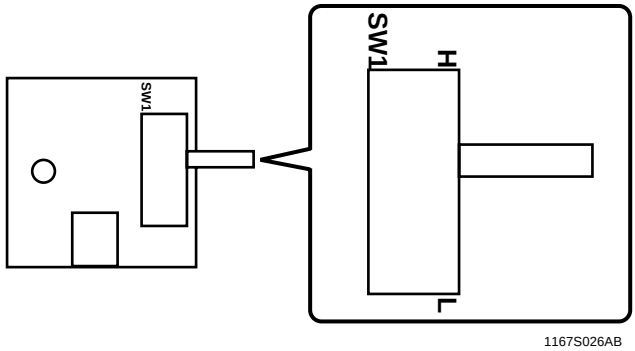

Symbol	Name	Description
S1	Low-Speed Mode Selecting Switch	Used to make longer the paper-to-paper intervals as a means of preventing the problem in which sheets of paper are fed out untidily when large size paper left to stand under high humidity condition is being used. ✻ Keep this switch in the H position, as it is only for special users.

3-5. UN2 (MFB Board)

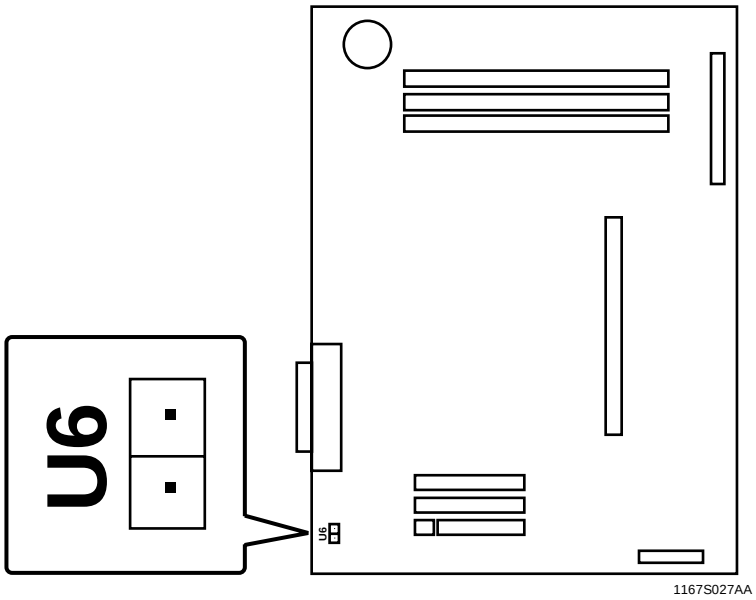

1167S027AA

Symbol	Name	Description
U6	Forced Memory Clear	Used when it is not possible to clear RAM by warm restart.

✻ Be careful about using these pins, as closing these pins clears all data including counter data.

<Clearing Procedure>

1. Turn OFF the Power Switch.
2. Remove the Upper Cover and MFB Box Cover.
3. Close U6 and, in that condition, turn ON the Power Switch.

NOTE

Use care not to close any other circuit.

4. When the initial screen appears, turn the Power Switch OFF.
5. Open U6.

NOTE

When Forced RAM Clear has been performed, make these adjustments and settings once again in this order:

1. "Marketing Area" of "Initial mode"
2. "Memory Clear" of "Initial mode"
3. Other adjustments and settings as necessary

<Data/Conditions Cleared by Reset Switches/Pins>

Switches/Pins / Data/Conditions Cleared	Power Switch OFF/ON	Side Cover open/ close	Initial Mode			Forced RAM Clear
			Memory Clear	Total Clear	Trouble Reset	
Misfeed display	❍	❍	❍	—	❍	❍
Malfunction display (other than Fusing)	❍	❍	❍	—	—	❍
Malfunction display (all including Fusing)	—	—	❍	—	❍	❍
Erratic operation/ display	—	—	❍	—	❍	❍
User's Choice	—	—	❍	—	—	❍
Tech. Rep. Mode	—	—	❍	—	—	❍
Counter	—	—	—	❍	—	❍
RD Mode	—	—	—	❍	—	❍
Security Mode	—	—	❍	—	—	❍
Adjust Mode	—	—	—	—	—	❍

❍: Cleared (initialized) —: Not cleared

4 USER'S CHOICE MODE

- The User's Choice mode is used to make various settings according to the user's needs.

4-1. User's Choice Selection Screen



1167S009CB

4-2. User's Choice Function Setting Procedure

<Setting Procedure>

1. Press the Utility key on the control panel and then touch the "User's Choice" key.
2. Select the page number key that contains the desired function from among 1/5 through 5/5 shown at the bottom of the Touch Panel.
3. Select the function to be set and make settings as required.
4. After the settings are complete, touch the "Enter" key to validate the settings.

✻ The function selected is highlighted.

<Exiting the Mode>

- Touch [Exit] on the screen to go back to the Basic screen.

4-3. User's Choice Function Tree

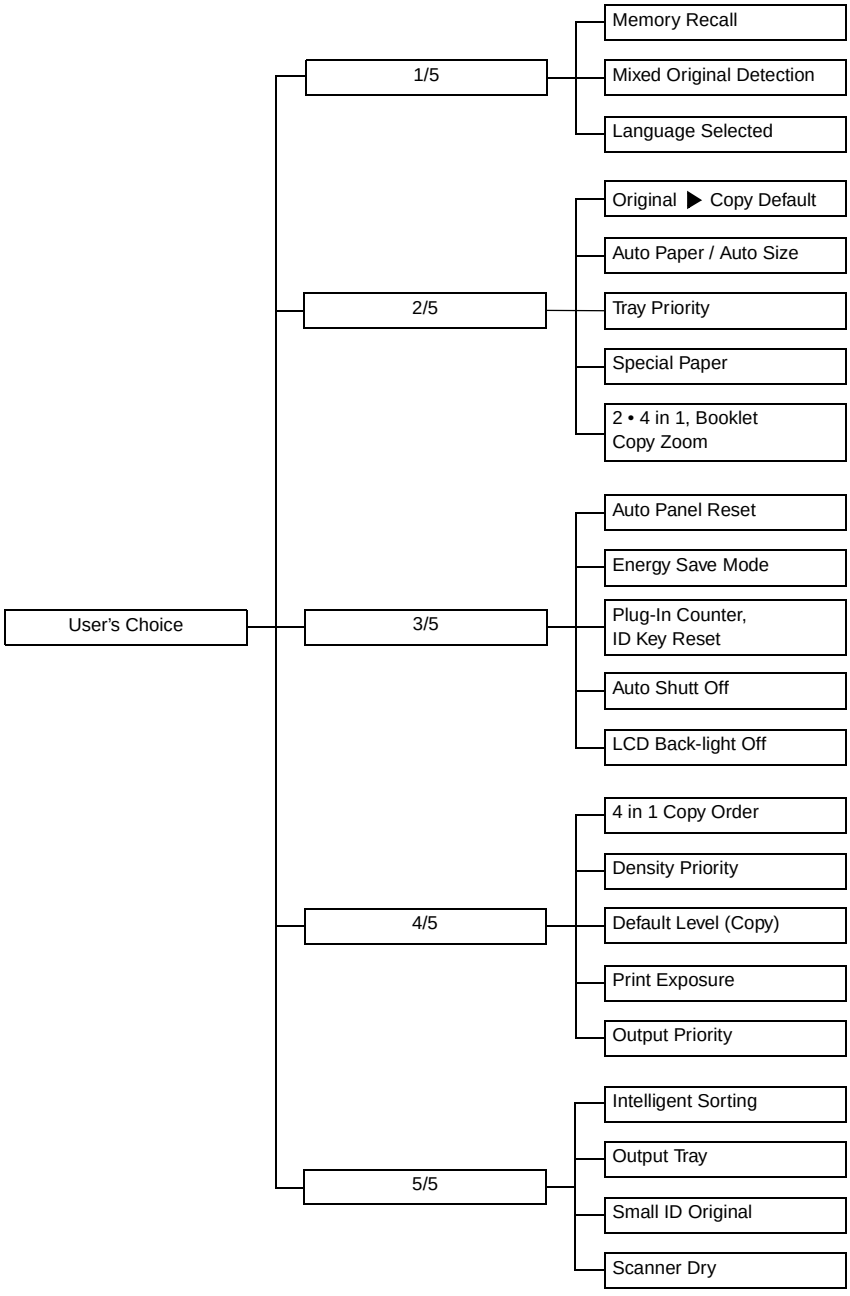

4-4. Settings in the User's Choice Mode

<table>
<tr><th>Touch Panel Display</th><th>Setting (The default is Highlighted).</th></tr>
<tr><td>Memory Recall</td><td>Select whether to enable (“ON”) or disable (“OFF”) the function that retains the image data even after the last copy paper has been fed out, allowing the user to recall the same image data.
<table><tr><td>ON</td><td>OFF</td></tr></table></td></tr>
<tr><td>Mixed Original Detection</td><td>Select whether to let the system select by default (“ON”) the Mixed Original Detection mode or not (“OFF”) when power is turned ON or the Panel Reset key pressed.
<table><tr><td>ON</td><td>OFF</td></tr></table></td></tr>
<tr><td>Language Selected</td><td>Select the language of the Touch Panel messages.
<Metric Areas>
<table><tr><td>ENGLISH</td><td>GERMAN</td><td>FRENCH</td></tr><tr><td>DUTCH</td><td>ITALIAN</td><td>SPANISH</td></tr><tr><td>PORTUGUESE</td><td>DANISH</td><td>NORWEGIAN</td></tr><tr><td>SWEDISH</td><td>FINISH</td><td>JAPANESE</td></tr></table><Inch Areas>
<table><tr><td>ENGLISH</td><td>FRENCH</td><td>SPANISH</td></tr><tr><td>JAPANESE</td></tr></table></td></tr>
</table>

<table>
<tr><th>Touch Panel Display</th><th>Setting (The default is Highlighted).</th></tr>
<tr><td>Original ▶ Copy Default</td><td>Select the type of Original ▶ Copy setting selected automatically when the copier is turned ON or Panel Reset key pressed. If “Duplex only” is selected for “Simplex/Duplex” of the “Tech. Rep. Choice” function, 1 ▶ 1 is not displayed.
<1-Sided ▶ 2-Sided>
<table><tr><td>1-Sided ▶
2-Sided</td><td>2-Sided ▶
2-Sided</td><td>1-Sided ▶
1-Sided</td></tr></table>
<1-Sided ▶ 2-Sided>
<table><tr><td>1-Sided ▶
2-Sided</td><td>2-Sided ▶
2-Sided</td></tr></table></td></tr>
<tr><td>Auto Paper/ Auto Size</td><td>Specify the default mode selected automatically when power is turned ON or the Panel Reset key pressed.
<table><tr><td>Auto Paper</td><td>Auto Size</td><td>Manual</td></tr></table></td></tr>
<tr><td>Tray Priority</td><td>Specify the paper source selected automatically.
<table><tr><td>1st Drawer</td></tr><tr><td>2nd Drawer</td></tr><tr><td>3rd Drawer</td></tr><tr><td>4th Drawer</td></tr><tr><td>5th Drawer</td></tr><tr><td>LCT</td></tr></table>✻ Manual Bypass Tray is not selectable.</td></tr>
<tr><td>Special Paper</td><td>Set up a drawer for special paper loading.
<table><tr><td>Normal</td><td>Not for 2-Sided</td></tr><tr><td>Recycled</td><td>Special</td></tr></table></td></tr>
<tr><td>2 • 4 in 1, Booklet Copy Zoom</td><td>Select whether to enable (“ON”) or disable (“OFF”) recalling a default zoom ratio for 2in1, 4in1, or Booklet Creation.
<table><tr><td>ON</td><td>OFF</td></tr></table>The default zoom ratios are as follows when “ON” has been selected.
< Metric Areas >
<table><tr><td>× 0.500 4in1</td></tr><tr><td>× 0.707 2in1/Booklet</td></tr><tr><td>× 1.414 Separation</td></tr></table>
< Inch Areas >
<table><tr><td>× 0.500 4in1</td></tr><tr><td>× 0.647 2in1/Booklet</td></tr><tr><td>× 1.545 Separation</td></tr></table></td></tr>
</table>

Touch Panel Display	Setting (The default is **Highlighted**).
Auto Panel Reset	Specify the default exposure mode selected automatically when power is turned ON or the Panel Reset key pressed. 30 seconds | **1 min** | 2 min 3 min | 5 min | No Reset
Energy Save Mode	Set the time it takes the copier to enter the Energy Saver mode after a copy cycle has been completed or the last key operated. Use the 10-key Pad to set the time (1 to 240 min.). (1 to 240) **(15 min)**
Plug-In Counter, ID key Reset	Select whether to reset (“ON”) the panel or not (“OFF”) automatically when the Access Mode key is pressed or the Key Counter is unplugged. **ON** | OFF
Auto Shut Off	Select whether to turn ON or OFF the Auto Shut Off function that shuts down the copier a given period of time after a copy cycle has been completed or the last key operated. Selecting “ON” means setting the time it takes the Auto Shut Off function to be activated, that can range from 15 min. to 240 min. No Reset | (15 to 240) **(60 min)** ✻ The option of “No Reset” becomes available on the screen if “Yes” is selected for “Disable Sleep” of Utility - Admin. Management - Administrator Set.
LCD Back-light Off	Set the time it takes the LCD backlight to turn OFF after a copy cycle has been completed or the last key has been operated. (1 to 240) **(1 min)**

Touch Panel Display	Setting (The default is **Highlighted**).
4 in 1 Copy Order	Specify the default copying order in the 4in1 mode. 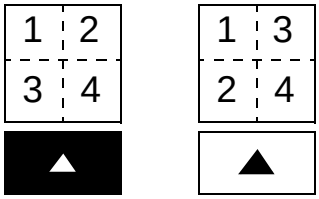
Density Priority	Specify the default exposure mode selected automatically when power is turned ON or the panel Reset key pressed. <Density> **Auto** | Manual ✻ "Photo" of "Original Image Type" cannot be selected when "Auto" is selected. <Original Image Type> **Text** | Photo | Text/Photo
Default Level (Copy)	Auto: Select the default exposure level in the Auto Exposure mode. Manual: Set the default exposure level in the Manual Exposure mode. <Auto> Lighter | **Normal** | Darker <Manual>  Lighter ... Darker ✻ EXP. 1 (Lighter) to EXP. 9 (Darker)
Print Exposure	Set the image density level for printing. -3 | -2 | -1 | **0** | 1 | 2 | 3
Output Priority	Select the default finishing type when the copier is equipped with a Sorter or Staple Sorter. **Non-Sort** / Sort / Group Staple ✻ Staple can be combined with either Sort or Group. Hole Punch ✻ Hole Punch can be combined with any one of the functions.

<table>
<tr><th>Touch Panel Display</th><th>Setting (The default is Highlighted).</th></tr>
<tr><td>Intelligent Sorting</td><td>When the system is equipped with a finishing option and the ADF is being used, select whether to turn “ON” or “OFF” the function that automatically switches between Sort and Non-Sort according to the number of originals loaded in the ADF.
<table>
<tr><td>ON</td><td>OFF</td></tr>
</table>
</td></tr>
<tr><td>Output Tray</td><td>Select the output tray for each application when the system is equipped with a Job Tray or Finisher.
<Printer>
• Job Tray
<table>
<tr><td>1</td><td>2</td></tr>
</table>
• Finisher
<table>
<tr><td>1</td><td>2</td></tr>
</table>
<Copier>
<table>
<tr><td>1</td><td>2</td></tr>
</table>
✻ 1: 1st tray; 2: 2nd tray
✻ When the system is equipped with a Finisher, the option of “Copier” and the tray designation keys “1” and “2” are not displayed.</td></tr>
<tr><td>Small ID Original</td><td>Select whether to enable (“ON”) a copy cycle or not (“OFF”) when it is initiated with no original placed on the Original Glass or with an original of a small size that is not detectable by the system (smaller than A5) placed on the Original Glass.
<table>
<tr><td>ON</td><td>OFF</td></tr>
<tr><td>The copy cycle is run using the paper loaded in the default paper source.</td><td>A warning message is given and the copier inhibits the start of this copy cycle.</td></tr>
</table>
</td></tr>
<tr><td>Scanner Dry</td><td>Set the time-of-day to run a Scanner drying cycle.
<table>
<tr><td>Hours</td><td>Minutes</td></tr>
<tr><td>00 ~ 23</td><td>00 ~ 59</td></tr>
</table>
✻ When entering a value for Hours and Minutes and if it is a one-digit number, first enter a “0.”</td></tr>
</table>

5 TECH. REP. MODE

- This mode is used by the Tech. Rep. to set, check, adjust, and/or program various service functions.

5-1. Tech. Rep. Mode Menu Screen

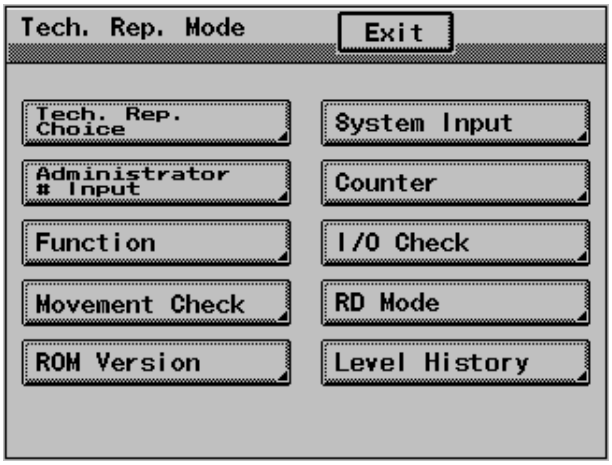

1171S005CA

5-2. Tech. Rep. Mode Function Setting Procedure

<Setting Procedure>

1. Set the copier into the Tech. Rep. mode by the following method:

- With the “Meter Count” screen opened from the Utility menu screen, press the following keys in this order:

Stop Key ➡ 0 ➡ 0 ➡ Stop Key ➡ 0 ➡ 1

2. Select the particular Tech. Rep. mode function to be set.
3. Make the necessary settings according to the function selected.

✻ The function selected is highlighted.

<Exiting the Mode>

- Touch [Exit] on the screen to go back to the Basic screen.

5-3. Tech. Rep. Mode Setting Tree

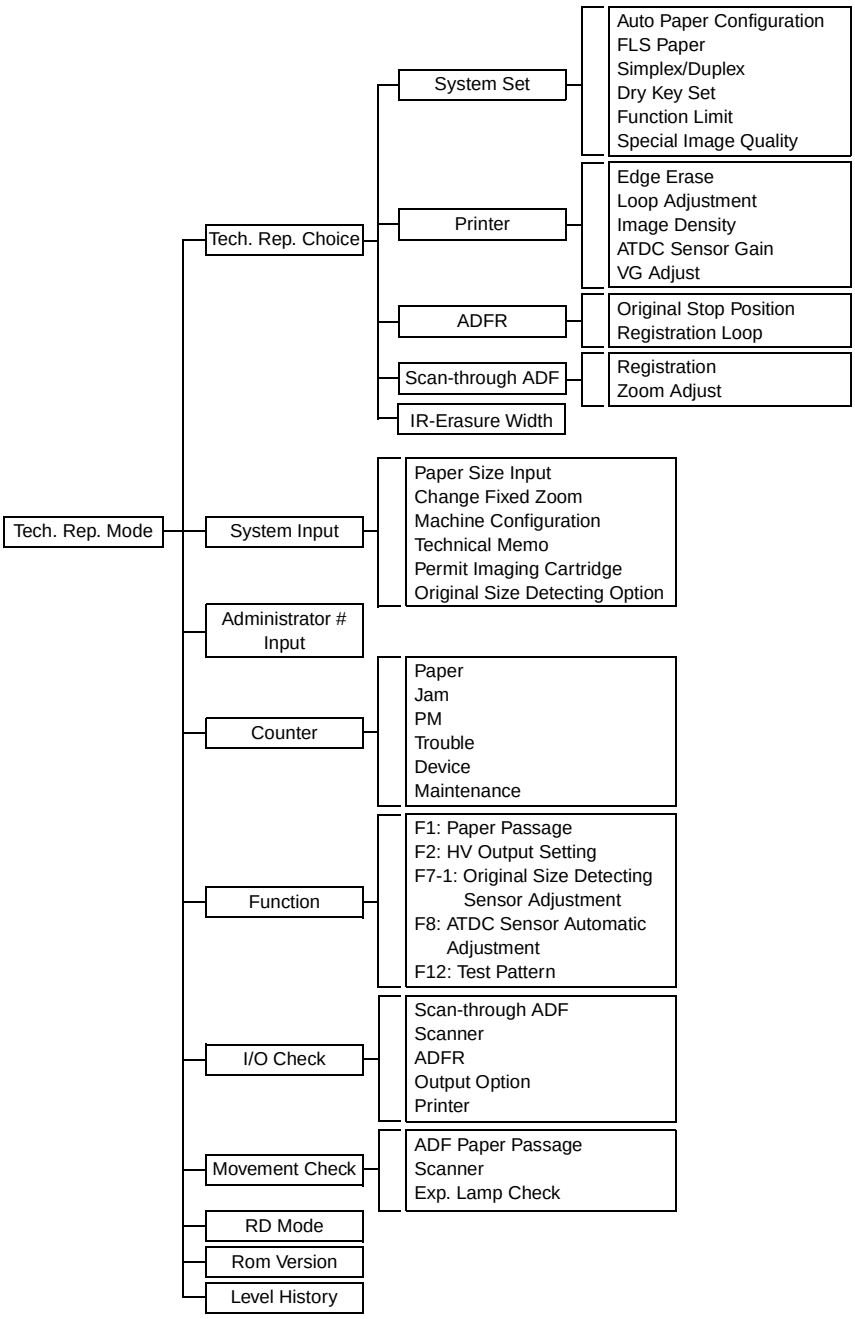

5-4. Settings in the Tech. Rep. Mode

(1) Tech. Rep. Choice

- This function allows the Tech. Rep. to make the various settings and adjustments.

<Function>
1. System Set
2. Printer
3. ADFR
4. Scan-through ADF

<Setting Procedure>
1. Touch [Tech. Rep. Choice] to open a screen to Tech. Rep. Choice.
2. Touch the desired major category key.
3. Touch the desired sub-category key.

Tech. Rep. Mode ▶ Tech. Rep. Choice

<System Set>

<table>
<tr><th>Touch Panel Display</th><th>Setting (The default is Highlighted).</th></tr>
<tr><td>Auto Paper Configuration</td><td><Metric Areas>
Select either “Inch/Metric” or “Metric” for rounding off the original size detected.
<table>
<tr><td>Inch / Metric</td><td>The measurement is rounded to the nearest standard inch or metric size.</td></tr>
<tr><td>Metric</td><td>The measurement is rounded to the nearest standard metric size.</td></tr>
</table>
<Inch Areas>
Select either “Inch/Metric” or “Inch” for rounding off the original size detected.
<table>
<tr><td>Inch / Metric</td><td>The measurement is rounded to the nearest standard inch or metric size.</td></tr>
<tr><td>Inch</td><td>The measurement is rounded to the nearest standard inch size.</td></tr>
</table></td></tr>
<tr><td>FLS Paper</td><td>Set the size for FLS.
<table>
<tr><td>F: 330 mm
C: 203 mm</td><td>F: 330mm
C: 210mm</td><td>F: 330 mm
C: 216 mm</td><td>F: 330 mm
C: 220 mm</td></tr>
</table></td></tr>
<tr><td>Simplex/Duplex</td><td>Select whether or not to enable the setting of 1-Sided ▶ 1-Sided under Original ▶ Copy Default available from User’s Choice.
✻ If “Simplex & Duplex” is selected, 1-Sided ▶ 1-Sided becomes available as an option.
<table>
<tr><td>Display</td><td>Simplex & Duplex</td><td>Duplex Only</td></tr>
<tr><td>Description</td><td>Does not limit the options for Original ▶ Copy Default to 2-sided copying only.</td><td>Limits the options for Original ▶ Copy Default to 2-sided copying only.</td></tr>
</table></td></tr>
</table>

Tech. Rep. Mode ▶ Tech. Rep. Choice

Touch Panel Display	Setting (The default is **Highlighted**).
Dry Key Set	Select whether to display the Dry key for "User Management" of Utility. If the key is to be displayed, select whether to dry only the Scanner or both Scanner and Drum. Scanner | Scanner & Drum | **Disable**
Function Limit	Select whether to limit ("ON") the functions to be set on the control panel or not ("OFF"). ON: Enables the functions other than Orig. ▶ Copy and Auxiliary. **OFF**: Enables all functions (no Limit).
Special Image Quality	Select whether to enable the selection of Special Image Quality for "Density Priority" of User's Choice (applicable on a case-by-case basis). ✻ Touching the "✻" key on the System Set menu selects or cancels this function. ✻ Key high-lighted: The Special Image Quality key is displayed. ✻ Key not high-lighted: The Special Image Quality key is not displayed.

<Printer>

Touch Panel Display	Setting (The default is **Highlighted**).
Edge Erase	Set the erase width on the leading, trailing, right, and left edge of the image. Leading / Trailing / Right/Left: 0mm..... **4** ..... 5mm Smaller ◄——► Greater
Loop Adjustment	Set the loop length to be formed before the Synchronizing Rollers. 1st Drawer / Other Drawers / Duplex & Manual: -5mm..... **0** ..... +5mm Smaller ◄——► Greater

Tech. Rep. Mode ▶ Tech. Rep. Choice

Touch Panel Display	Setting (The default is **Highlighted**).
Image Density	Set the image density for the printer. ✻ The value set for this function becomes the central value of “Print Exposure” of User’s Choice. -2 ..... **0** ..... +4 Lighter ◄——► Darker
ATDC Sensor Gain	Current: Shows the current ATDC control voltage. Set: Set the ATDC control voltage. ✻ If the “Set” value is to be changed, be sure to record the “Current” value. ✻ The ATDC Sensor Gain value can be converted to a voltage value using the following equation. ATDC Sensor Gain = 5.1 × 2.2 × [setting value] ÷ 256 (V) 123 ..... **155** ..... 186 T/C Greater ◄——► T/C Smaller
VG Adjust	Set VG when a fog or void occurs in the image. -2 ..... **0** ..... +2 Lighter ◄——► Darker

<ADFR>

Touch Panel Display	Setting (The default is **Highlighted**).
Original Stop Position	Set the document stop position in each of the ADFR modes. 1-Sided Set / 2-Sided Set / Single Feed Set: -7 ..... **0** ..... +7 Original Width Scale end ◄——► Original Glass end ✻ The minimum setting value is -6 only for 2-Sided Set.
Registration Loop	Set the loop length to be formed in the original before the Registration Roller of ADFR. -5mm ..... **0** ..... +5mm Smaller ◄——► Greater

Tech. Rep. Mode ▶ Tech. Rep. Choice

<Scan-through ADF>

Touch Panel Display	Setting (The default is **Highlighted**).
Registration	Adjust registration in the main and sub scanning directions of the ADF. -127 dot..... **0** ..... +127 dot Smaller ◄——► Greater
Zoom Adjust	Adjust the scanning zoom ratio in the main and sub scanning directions of the ADF. 0.990..... **1.000** ..... 1.010 Smaller ◄——► Greater

<IR-Erasure Width>

Touch Panel Display	Setting (The default is **Highlighted**).
IR-Erasure Width	Set the forced erasure width along the four edges of the paper to erase shadows which are otherwise produced by the Original Scales. **0mm** .....3mm Smaller ◄——► Greater

(2) System Input

- This function allows the Tech. Rep. to change the fixed zoom ratios, set the paper size, define the marketing area, configure for the Key Counter, and input the telephone number.

<Setting Procedure>
1. Touch [System Input] to open the System Input menu screen.
2. Touch the desired subfunction key.

Tech. Rep. Mode ▶ System Input

Touch Panel Display	Operation
Paper Size Input	Set the size of the paper used in each paper source. ✻ This function cannot be used for the LCC as its paper is set with its internal DIP switch. <Procedure> 1. Touch the key of the paper source for which the paper size setting is to be changed to show the Paper Size Input screen. 2. Touch the desired paper size key. ✻ If the 10-key Pad has been selected, enter the FD and CD size of the paper from the 10-Key Pad. 3. Touch [END] to validate the paper size setting.
Change Fixed Zoom	Change a fixed zoom ratio to a desired value in the range between ×0.250 and ×4.000. <Procedure> 1. Touch the key of the fixed zoom ratio to be changed. 2. Press the Clear key to clear the setting and enter the new ratio from the 10-Key Pad. 3. Touch [Input] to validate the new setting.
Machine Configuration	Displays the machine configuration status.
Technical Memo	Enter the serial number and other data.
Permit Imaging Cartridge	Select whether to permit the use of an illegal Imaging Cartridge installed. The use is enabled when [Enter] is touched after “Yes” has been selected. ✻ It is not possible to disable the use of an Imaging Cartridge once permitted. Yes / **No**
Original Size Detecting Option	Set whether the optional Original Size Detecting Sensor is available or not. ON / **OFF**

(3) Administrator # Input

- This function allows the Tech. Rep. to set the administrator number that is used to open the “Admin. Management” screen of Utility.

<Setting Procedure>
1. Touch [Administrator # Input] to open the Administrator # Input menu screen.
2. Blank out the numeric data with the Clear key and enter the desired number from the 10-Key Pad.
3. Touch [Enter] to validate the entry of the number.

Tech. Rep. Mode ▶ Administrator # Input

Touch Panel Display	Operation
Administrator # Input	Set the administrator number used to open the “Admin. Management” screen of Utility from the 10-Key Pad. (1 to 8 digits: 0 to 99999999)

(4) Counter

- This function maintains the counts of the various counters, thus aiding the Tech. Rep. in performing service jobs.

<Setting Procedure>
1. Touch [Counter] to open the Counter menu screen.
2. Touch [Check] and then the desired counter to open the detailed counter screen.
3. To clear a count, touch [Counter Reset], the key of the counter to be cleared, and [END].

✻ Two or more counters can be selected.

Tech. Rep. Mode ▶ Counter

<table>
<tr><th>Touch Panel Display</th><th>Operation</th></tr>
<tr><td>Paper</td><td>Shows the number of sheets of paper used by the size and type. Each counter may be reset to 0 independently of the others:
<Paper Counter 1/2>
<table><tr><th>Display</th><th>Description</th></tr><tr><td>A3</td><td>A3L</td></tr><tr><td>B4</td><td>B4L</td></tr><tr><td>A4</td><td>A4L/C</td></tr><tr><td>B5</td><td>B5L/C</td></tr><tr><td>A5</td><td>A5L/C</td></tr><tr><td>B6</td><td>B6L</td></tr><tr><td>A6</td><td>A6L</td></tr><tr><td>11 × 17</td><td>11” × 17”L</td></tr><tr><td>11 × 14</td><td>11” × 14”</td></tr><tr><td>Letter</td><td>Letter L/C</td></tr><tr><td>Legal</td><td>Legal L/C</td></tr><tr><td>5-1/2 × 8-1/2</td><td>5-1/2” × 8-1/2” L/C</td></tr></table>
<Paper Counter 2/2>
<table><tr><th>Display</th><th>Description</th></tr><tr><td>FLS.</td><td>FLS.</td></tr><tr><td>Normal</td><td>Normal</td></tr><tr><td>Recycled</td><td>Recycled</td></tr><tr><td>Special</td><td>Special</td></tr><tr><td>Not for 2-Sided</td><td>Not for 2-Sided</td></tr></table>
<Clearing a Count>
Touch the item key whose count is to be cleared and press the Clear key. If a count is accidentally cleared, pressing the Interrupt key will undo the clear operation.</td></tr>
</table>

Tech. Rep. Mode ▶ Counter

<table>
<tr><th>Touch Panel Display</th><th>Operation</th></tr>
<tr><td>Jam</td><td>Shows the number of misfeeds that have occurred in different parts of the system, together with rates of occurrence (MCBJ, MDBJ). Each counter may be reset to zero independently of the others:

<Jam Counter 1/5>
<table>
<tr><th>Display</th><th>Description</th></tr>
<tr><td>MCBJ System</td><td>Average no. of copies made for each paper misfeed:
MCBJ Total Counter ÷ Jam Counter (including misfeeds in Finisher)</td></tr>
<tr><td>MCBJ Machine Only</td><td>Average no. of copies made for each paper misfeed:
MCBJ Total Counter ÷ Jam Counter (excluding misfeeds in Finisher)</td></tr>
<tr><td>1st Drawer</td><td>No. of misfeeds that occurred at the 1st Drawer of the copier</td></tr>
<tr><td>2nd Drawer</td><td>No. of misfeeds that occurred at the 2nd Drawer of the copier</td></tr>
<tr><td>3rd Drawer</td><td>No. of misfeeds that occurred at the 3rd Drawer of the copier</td></tr>
<tr><td>4th Drawer</td><td>No. of misfeeds that occurred at the 4th Drawer of the copier</td></tr>
<tr><td>5th Drawer</td><td>No. of misfeeds that occurred at the 5th Drawer of the copier</td></tr>
</table>
<Jam Counter 2/5>
<table>
<tr><th>Display</th><th>Description</th></tr>
<tr><td>Manual Feed</td><td>No. of misfeeds that occurred at the Manual Bypass Tray</td></tr>
<tr><td>Vertical Transport</td><td>No. of misfeeds that occurred at the paper take-up/transport section of the copier</td></tr>
<tr><td>Separator</td><td>No. of misfeeds that occurred at the paper separator section of the copier</td></tr>
<tr><td>Fusing</td><td>No. of misfeeds that occurred at the Fusing Unit of the copier</td></tr>
<tr><td>Duplex Entrance</td><td>No. of misfeeds that occurred at the turnover/storage section of the copier</td></tr>
<tr><td>Duplex Feed</td><td>No. of misfeeds that occurred at the paper take-up section of the Duplex</td></tr>
<tr><td>LCC Feed</td><td>No. of misfeeds that occurred at the paper take-up section of the LCC</td></tr>
</table>
<Jam Counter 3/5>
<table>
<tr><th>Display</th><th>Description</th></tr>
<tr><td>LCC Transport</td><td>No. of misfeeds that occurred in the LCC transport section</td></tr>
<tr><td>Shift/2Bin Tray Transport</td><td>No. of misfeeds that occurred in the Shift/Job Tray transport section</td></tr>
<tr><td>Shift/2Bin Tray Exit</td><td>No. of misfeeds that occurred in the Shift/Job Tray exit section</td></tr>
<tr><td>Finisher Horizontal Transport</td><td>No. of misfeeds that occurred in the Finisher horizontal transport section</td></tr>
<tr><td>Finisher Transport</td><td>No. of misfeeds that occurred in the Finisher transport section</td></tr>
<tr><td>Finisher Exit</td><td>No. of misfeeds that occurred in the Finisher exit section</td></tr>
<tr><td>Finisher Staple</td><td>No. of Finisher staple misfeeds that occurred</td></tr>
</table>
✻ 2Bin Tray = Job Tray</td></tr>
</table>

Tech. Rep. Mode ▶ Counter

<table>
<tr><th>Touch Panel Display</th><th>Operation</th></tr>
<tr><td>Jam</td><td>
<Jam Counter 4/5>
<table>
<tr><th>Display</th><th>Description</th></tr>
<tr><td>Finisher Set Transport</td><td>No. of misfeeds that occurred in the Finisher Tray</td></tr>
<tr><td>MDBJ</td><td>Average no. of document transport sequences for each document misfeed:
ADFR Document Passage Counter ÷ ADFR Jam Counter</td></tr>
<tr><td>ADF (Scan-through ADF) Feed</td><td>No. of misfeeds that occurred at the paper take-up section of the ADF (Scan-through ADF)</td></tr>
<tr><td>ADF (Scan-through ADF) Transport</td><td>No. of misfeeds that occurred at the document transport section of the ADF (Scan-through ADF)</td></tr>
<tr><td>ADFR Reverse</td><td>No. of misfeeds that occurred at the document turnover and exit sections of the ADFR</td></tr>
<tr><td>SADF</td><td>No. of misfeeds that occurred at the SADF</td></tr>
</table>
<Jam Counter 5/5>
<table>
<tr><th>Display</th><th>Description</th></tr>
<tr><td>Printer</td><td>No. of misfeeds that occurred due to illegal designation of FCU2</td></tr>
<tr><td>Engine</td><td>No. of misfeeds that occurred due to communication error with engine (VD fault)</td></tr>
</table>
<Clearing a Count>
Touch the item key whose count is to be cleared and press the Clear key. If a count is accidentally cleared, pressing the Interrupt key will undo the clear operation.
</td></tr>
<tr><td>PM</td><td>
Shows the frequency of use of each of the PM parts. Each counter may be reset to 0 independently of the others:
<PM Counter 1/3>
<table>
<tr><th>Display</th><th>Description</th></tr>
<tr><td>I/C Life</td><td>No. of revolutions of I/C</td></tr>
<tr><td>Fusing Unit</td><td>No. of times a sheet of paper is fed out</td></tr>
<tr><td>1st Drawer</td><td>No. of sheets of paper fed from the 1st Drawer</td></tr>
<tr><td>2nd Drawer</td><td>No. of sheets of paper fed from the 2nd Drawer</td></tr>
<tr><td>3rd Drawer</td><td>No. of sheets of paper fed from the 3rd Drawer</td></tr>
<tr><td>4th Drawer</td><td>No. of sheets of paper fed from the 4th Drawer</td></tr>
<tr><td>5th Drawer</td><td>No. of sheets of paper fed from the 5th Drawer</td></tr>
</table>
<PM Counter 2/3>
<table>
<tr><th>Display</th><th>Description</th></tr>
<tr><td>LCC Parts 1</td><td>No. of sheets of paper fed from the LCC (for 200k)</td></tr>
<tr><td>LCC Parts 2</td><td>No. of sheets of paper fed from the LCC (for 300k)</td></tr>
<tr><td>Other PM Parts 1</td><td>No. of print cycles run (for 100k)</td></tr>
<tr><td>Other PM Parts 2</td><td>No. of print cycles run (for 150k)</td></tr>
<tr><td>Other PM Parts 3</td><td>No. of print cycles run (for 60k/120k)</td></tr>
<tr><td>1-Sided</td><td>No. of times a 1-sided original is fed through</td></tr>
<tr><td>2-Sided</td><td>No. of times a 2-sided original is fed through</td></tr>
</table>
</td></tr>
</table>

Tech. Rep. Mode ▶ Counter

<table>
<tr><th>Touch Panel Display</th><th>Operation</th></tr>
<tr><td>PM</td><td>
<PM Counter 3/3>
<table>
<tr><th>Display</th><th>Description</th></tr>
<tr><td>SADF
IR 1
IR 2
2 Bin Tray
Toner Pages</td><td>No. of single feeds
No. of scan motions (for 60k)
No. of scan motions (120k)
No. of cycles of feeding paper out into Job Tray
No. of pages equivalent to the no. of black dots on A4 original with B/W 5%</td></tr>
</table>
✻ 2Bin Tray = Job Tray
<Clearing a Count>
Touch the item key whose count is to be cleared and press the Clear key. If a count is accidentally cleared, pressing the Interrupt key will undo the clear operation.
✻ I/C Life cannot be cleared.
</td></tr>
<tr><td>Trouble</td><td>
Shows the number of malfunctions that have occurred in different parts of the system. Each counter may be reset to 0 independently of the others:
<Trouble Counter 1/5>
<table>
<tr><th>Malfunction Code</th><th>Location</th><th>Malfunction Code</th><th>Location</th></tr>
<tr><td>C0000
C0010
C0045
C004C</td><td>Main Motor
I/C Motor
Cooling Fan
Ventilation Fan</td><td>C004E
C0070
C0500
C0510</td><td>Cooling Fan (Power Supply)
Toner Bottle Motor
Fusing Warming-up
Fuser Low Temperature</td></tr>
</table>
<Trouble Counter 2/5>
<table>
<tr><th>Malfunction Code</th><th>Location</th><th>Malfunction Code</th><th>Location</th></tr>
<tr><td>C0520
C0650
C0651
C0990</td><td>Fuser High Temperature
Home Sensor
Left Sensor
LCC Transport Motor</td><td>C0991
C0995
C0999
C099D</td><td>LCC Lift 1 Limit
LCC Lift Motor
LCC Lift 2 Limit
LCC Communication</td></tr>
</table>
<Trouble Counter 3/5>
<table>
<tr><th>Malfunction Code</th><th>Location</th><th>Malfunction Code</th><th>Location</th></tr>
<tr><td>C0B00
C0B0F
C0B30
C0B38</td><td>Transport Drive Motor
Horiz. Trans. Route Switch
Paper Aligning Bar Unit
Paper Standard Board Unit</td><td>C0B4D
C0B4E
C0B50
C0B80</td><td>Assist Tray Unit
Transaction Tray Unit
Staple Unit
Shift Tray Shift</td></tr>
</table>
<Trouble Counter 4/5>
<table>
<tr><th>Malfunction Code</th><th>Location</th><th>Malfunction Code</th><th>Location</th></tr>
<tr><td>C0BA0
C0F32
C0F33
C1038</td><td>Elevate Motor
ATDC Sensor
ATDC Adjust
Engine Connection</td><td>C1300
C1330
C133A</td><td>Polygon Motor
Communication Error (VSYNC)
Communication Error (G/A)</td></tr>
</table>
</td></tr>
</table>

Tech. Rep. Mode ▶ Counter

<table>
<tr><th>Touch Panel Display</th><th>Operation</th></tr>
<tr><td>Trouble</td><td>
<Trouble Counter 5/5>
<table>
<tr><th>Malfunction Code</th><th>Location</th><th>Malfunction Code</th><th>Location</th></tr>
<tr><td>C133B
C13C0
C13D0</td><td>Communication Error (Option)
I/C Initial Error
EEPROM</td><td>C13F0
C18XX</td><td>HSYNC (SOS)
Printer Controller Error</td></tr>
</table>
<Clearing a Count>
Touch the item key whose count is to be cleared and press the Clear key. If a count is accidentally cleared, pressing the Interrupt key will undo the clear operation.
</td></tr>
<tr><td>Device</td><td>
Shows the numbers of prints for different applications. It also allows the Tech. Rep. to clear each counter.
<table>
<tr><th>Display</th><th>Description</th></tr>
<tr><td>Copier</td><td>No. of prints made by copier</td></tr>
<tr><td>Printer</td><td>No. of prints made by printer</td></tr>
<tr><td>Report Print</td><td>No. of report prints made</td></tr>
<tr><td>Fax Print</td><td>No. of fax prints made</td></tr>
<tr><td>Fax Transmission</td><td>No. of prints made for fax transmission</td></tr>
</table>
<Clearing a Count>
Select the counter to be cleared with the item key and press the Clear key. If the count is accidentally cleared, pressing the Interrupt key will undo the clear operation.
</td></tr>
<tr><td>Maintenance</td><td>
• This function allows the Tech. Rep. to set the number of copies to be made before the Maintenance Call reminder is given. (1k ~ 9999k)
• It shows the current count value and the above setting. Each counter may be reset to 0 independently of the others:
• When the count reaches the preset value, the icon "△" appears in the Status Display.
✻ When "Call Indicated" is selected for "Maintenance Call" available from Tech. Rep. Choice.
<table>
<tr><th>Display</th><th>Description</th></tr>
<tr><td>Maintenance (Set)</td><td>The Maintenance Call reminder is given when the count reaches the preset value.</td></tr>
<tr><td>Maintenance (Count)</td><td>Counts one for each copy made.</td></tr>
</table>
<Setting a Count>
1. Touch [Maintenance (Set)] and then press the Clear key to clear the count. If the count is accidentally cleared, pressing the interrupt key will undo the clear operation.
2. Enter the desired value from the 10-Key Pad.

<Clearing a Count>
Touch [Maintenance (Count)] and then press the Clear key to clear the count. If the count is accidentally cleared, pressing the interrupt key will undo the clear operation.
</td></tr>
</table>

(5) Function

- This function allows the Tech. Rep. to run the various function tests and make adjustments.

<Setting Procedure>
1. Touch [Function] to open the Function menu screen.
2. Select the particular function to be run.

Tech. Rep. Mode ▶ Function

Touch Panel Display	Operation
F1	<Paper Passage> A paper passage test is carried out after the copier has completed warming up. <Procedure> 1. Select the paper source key. (Touch [Duplex] to check for paper passage from the Duplex Unit.) ✻ If the paper source is not loaded with paper, an Add Paper mark appears at that source. 2. Press the Start key to start the test cycle. The test runs until the paper source runs out of paper. 3. If the Stop key is pressed, the copier feeds the current sheet of paper out before halting. (Another press of the Start key will resume the test cycle.)
F2	<HV Output Setting> Set the output of each HV. ✻ This function is only for factory setting and should never be used in the field.
F7-1	<Original Size Detecting Sensor Adjustment> Automatically adjusts the Original Size Detecting Sensors. <Procedure> 1. Stack five sheets of A3 or 11" × 17" paper on the Original Glass and lower the Original Cover. 2. Press the Start key to let the system start the adjustment sequence. ✻ The system automatically stops as soon as the adjustment sequence is completed. It can nonetheless be halted in mid-sequence with the Stop key, which, however, results in incorrect size detection as the adjustment sequence is incomplete.
F8	<ATDC Sensor Automatic Adjustment> Automatically makes the ATDC Sensor adjustment. <Procedure> Press the Start key to let the system start the adjustment sequence. ✻ The voltage automatically adjusted by this function is displayed for ATDC Sensor Gain of the Level History data.

Tech. Rep. Mode ▶ Function

Touch Panel Display	Operation
F12	<Test Pattern> Outputs a test pattern. ✻ If 2-sided is specified, the system outputs a test pattern in the 2-sided mode. <Procedure> 1. Touch the desired paper source key. (Touch [Duplex] for test pattern output on paper fed from the Duplex Unit.) ✻ If the paper source is not loaded with paper, an Add Paper mark appears at that source. 2. Press the Start key to start the output sequence. (It continues until the paper source runs out of paper.) 3. Press the Stop key to halt the sequence.

(6) I/O Check

- This function displays the details of inputs to each sensor.

<Setting Procedure>
1. Touch [I/O Check] to open the I/O Check menu screen.
2. Touch the desired subfunction key.

Tech. Rep. Mode ▶ I/O Check

Touch Panel Display	Operation
Scan-through ADF	
IR	***NOTE*** • *For details, see TROUBLESHOOTING.*
ADFR	
Output Option	
Printer	

(7) Movement Check

- This function runs a specified mechanism to check for operation.

<Setting Procedure>
1. Touch [Movement Check] to open the Movement Check menu screen.
2. Touch the desired subfunction.

Tech. Rep. Mode ▶ Movement Check

Touch Panel Display	Operation
ADF Paper Passage	Feeds paper through the ADF in the specified mode to check for correct operation. 1-sided No Detect | 1-sided Mixed Orig | 2-sided SADF <Procedure> 1. Select ADF Paper Passage. 2. Touch the desired mode key. 3. Load originals in the ADF. 4. Press the Start key to let the ADF start feeding originals. ✻ Pressing of the Start key temporarily stops the ADF. (Another press will let the ADF resume the sequence.) ✻ The sequence is completed when there is no more originals in the ADF; however, it is possible to halt the sequence in mid-operation by pressing the Stop key.
Scanner	• Drives the CCD. • Turns ON the Exposure Lamp. • Moves the Scanner according to the set value.
Exp. Lamp Check	Checks for the intensity of the Exposure Lamp light.

(8) RD Mode (SMART)

✻ "SMART" is displayed for the inch areas.

Tech. Rep. Mode ▶ RD Mode

Touch Panel Display	Setting
RD Mode	For making the initial settings of the copier for the Data Terminal.
ID Code	Enter a 7-digit ID code (0000001 to 9999999) from the 10-Key Pad to enable making the following settings. When the ID code is entered and transmitted after the initial settings have been made, it executes the transmission of MAINT. START to the Center. ✻ 0000000 is invalid.
Maintenance	Used to make the initial settings and various transmissions.
DT Setting	Enter the following data.
CT-ID (Password)	Using the 10-Key Pad, enter the 4-digit ID number (0001 to 9999) of the Center which has been programmed in the Center personal computer. ✻ 0000 is invalid.
DT-ID	Using the 10-Key Pad, enter the 6-digit ID number (000001 to 999999) of the Data Terminal. ✻ 000000 is invalid.
TEL No.	Enter the 19-or-less-digit phone number of the modem connected to the Center personal computer from the 10-Key Pad. ✻ In addition to the 10-Key Pad and Clear key, use the following keys to enter the phone number. Interrupt key: For a pause (3 sec. or more), "-" Pause key: For a pause (3 sec. or more), "-" P key: For a "pulse" dialing, "P" T key: For a "tone" dialing, "T" W key: For a wait code (waiting for a signal from the other party), "W" ✻ key: For an ISDN subaddress, "✻" # key: For switching from the extension line to outside line, or vice versa, "#"
Initial Transmission	Used to perform the initial transmission from the copier to the Center to check for correct communication when the Data Terminal has been set up.
Counter Clear	Used to clear the count of the spare counter set by the Center. <Procedure> 1. Touch [Counter Clear] to open the Counter Clear screen. 2. Touch the number assigned to the counter to be cleared.
Call Completion	Used by the Tech. Rep. to notify the Center that his/her service job for the copier has been completed.

Tech. Rep. Mode ▶ RD Mode

Touch Panel Display	Setting (The default is **Highlighted**).
RD Mode	———
RAM Clear	Reinitializes the Data Terminal. YES / **NO**
Common DT	Set the following functions.
Dial Mode	Select the type of telephone line of the user. **Tone** / Pulse
Auto Receive	Choose “Yes” or “No” for the auto reception function. **YES** / NO ✻ Select “Yes” if the line is dedicated to the Data Terminal.
Result Code	Enter the result code for connection to the modem when the line is connected. (0 to 999)

(9) ROM Version

Tech. Rep. Mode ▶ ROM Version

<table>
<tr><th>Touch Panel Display</th><th>Operation</th></tr>
<tr><td>ROM Version</td><td>Displays the current ROM version information.
✻ No version information is displayed for a machine that is not connected to the system.
<Procedure>
1. Touch [ROM Version] to open the ROM Version screen.
2. The screen shows the ROM version information of various machines configured in the system.
<table>
<tr><th colspan="2">Display</th><th>Description</th></tr>
<tr><td>MSC</td><td>—</td><td>MFB Board</td></tr>
<tr><td>Message</td><td>IC4</td><td>MFB Board</td></tr>
<tr><td>Printer</td><td>IC1</td><td>Master Board</td></tr>
<tr><td>ADFR</td><td>IC3</td><td>ADFR Board</td></tr>
<tr><td>LCC</td><td>IC7</td><td>LCC Board</td></tr>
<tr><td>Finisher</td><td>IC3</td><td>Finisher/Job Tray Board</td></tr>
<tr><td>IIF</td><td>—</td><td>IIF2 Board</td></tr>
</table>
</td></tr>
</table>

(10) Level History

- This function is used to show the various level histories which are changed according to the operating conditions of the copier and user requirements.

Tech. Rep. Mode ▶ Level History

<table>
<tr><th>Touch Panel Display</th><th>Setting</th></tr>
<tr><td>Level History</td><td>
<ATDC Set>
Shows the voltage set by ATDC Sensor Automatic Adjustment (F8).
✻ The Level History data is updated when the ATDC Sensor Automatic Adjustment (F8) is completed.
<table>
<tr><th>Variable Range</th><th>Increments</th></tr>
<tr><td>123 to 186 (steps)</td><td>1 Step</td></tr>
</table>
<ATDC Current>
Shows the current, approximate ATDC Sensor T/C setting in percentage.
<table>
<tr><th>Variable Range</th><th>Increments</th></tr>
<tr><td>3.0 to 19.0 (%)</td><td>0.5%</td></tr>
</table>
<Vg Current>
Displays the grid voltage as corrected through image stabilization and related functions.
<table>
<tr><th>Variable Range</th><th>Increments</th></tr>
<tr><td>-514 to -728 (V)</td><td>-</td></tr>
</table>
<Vb Current>
Displays the developing bias voltage as corrected through image stabilization and related function.
<table>
<tr><th>Variable Range</th><th>Increments</th></tr>
<tr><td>-409 to -623 (V)</td><td>-</td></tr>
</table>
</td></tr>
</table>

6 SECURITY MODE

- This function allows the Tech. Rep. to make various settings.

6-1. Security Mode Menu Screen

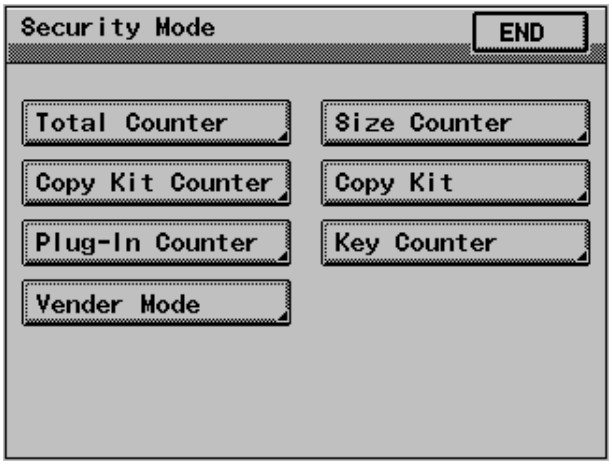

1167S011CA

6-2. Security Mode Function Setting Procedure

<Setting Procedure>

1. Set the copier into the Tech. Rep. mode by one of the following methods:
   A. With the copier turned ON, press the Tech. Rep. Setting Switch.
   B. With the Meter Count screen opened from Utility, press the following keys in this order:

   [Stop Key] ➡ [0] ➡ [0] ➡ [Stop Key] ➡ [0] ➡ [1]

2. Enter the Security mode by pressing the following keys in this order:

   [Stop Key] ➡ [9]

3. Select the particular Security mode to be set.
4. Make the necessary settings by following the instructions given sequentially on the screen.

✻ The Function selected is highlighted.

<Exiting the Mode>

Perform any one of the following steps to go back to the Basic screen.

- Press the Panel Reset key and Touch [Exit] on the Tech. Rep. Mode screen.
- Touch [END] on the Security Mode screen. Then touch [Exit] on the Tech. Rep. Mode screen.

6-3. Settings in the Security Mode

Tech. Rep. Mode ▶ Security Mode

<table>
<tr><th>Touch Panel Display</th><th>Setting (The default is Highlighted).</th></tr>
<tr><td>Total Counter</td><td>Select the conditions by which the Total Counter count is increased.
<table>
<tr><td>Mode 1</td><td>1 count per 1 copy cycle (normal mode)</td></tr>
<tr><td>Mode 2</td><td>Multiple count-up according to paper size and 1/2-sided copying</td></tr>
<tr><td>Mode 3</td><td>Multiple count-up according to paper size and 1/2-sided copying</td></tr>
</table>
✻ See the Count-up Table for details.</td></tr>
<tr><td>Size Counter</td><td>Select the size of the paper to be counted by the Size Counter.
<table>
<tr><td>No Count</td><td>A3
11×17</td><td>A3 / B4
11×17
Legal</td><td>A3 /11×17
B4 /11×14
FLS/Legal</td><td>A6</td></tr>
</table>
✻ See the Count-up Table for details.</td></tr>
<tr><td>Copy Kit</td><td>• Allows for setting the desired threshold before the Maintenance Call reminder is given.
• Displays both the current value and the above setting value. Each counter can also be reset independently of the other.
• When the current value (Current) becomes the setting value (Set), the icon “⚠” appears in the Status Display if “Mode 2” is selected for “Copy Kit Counter” and the Maintenance Call reminder (M4) is displayed if “Mode 3” is selected for “Copy Kit Counter.”
✻ Whether the initiation of a new copy cycle is inhibited or not when the current value exceeds the setting value depends on the setting made with Copy Kit Counter.
<table>
<tr><th>Display</th><th>Description</th></tr>
<tr><td>Set</td><td>Gives a Maintenance Call when Current value reaches Set value.</td></tr>
<tr><td>Current</td><td>Counts up for each copy made.</td></tr>
</table>
<Counter Setting Procedure>
1. Touch [Set] and press the Clear key to clear the current setting. If the setting is accidentally cleared, pressing of the Interrupt key will undo the clear operation.
2. Enter the desired value from the 10-Key Pad.
<Clearing the Count>
Touch [Current] and press the Clear key to clear the count. If the count is accidentally cleared, pressing of the Interrupt key will undo the clear operation.</td></tr>
</table>

Tech. Rep. Mode ▶ Security Mode

Touch Panel Display	Setting (The default is **Highlighted**).
Copy Kit Counter	Select whether to set the count or not for the Copy Kit Counter and select whether to inhibit the initiation of a new copy cycle or not when the Current value reaches Set value. **Mode 1**: No counting Mode 2: Counted and permits copying even when the Set value is reached. Mode 3: Counted and inhibits copying when the Set value is reached.
Plug-In Counter	Select the condition by which the Key Counter count is increased. **Copies Made** / Copy Cycles ✻ See the Count-up Table for details.
Key Counter	Set whether a Key Counter is plugged in (“ON”) or not (“OFF”). ON / **OFF**
Vender Mode	Select the medium to be used when the Key Counter or Vender is used. ✻ This function is not valid if “OFF” is selected for “Key Counter.” **OFF** / Coin / Card

Tech. Rep. Mode ▶ Security Mode

<Count-up Table>

Copying		1-Sided						2-Sided					
Size		Size other than those set			Set size			Size other than those set			Set size		
Total		Mode			Mode			Mode			Mode		
		1	2	3	1	2	3	1	2	3	1	2	3
Total (mechanical, electronic)		1			1	2	2	2			2	4	4
Size (electronic)		0			1	1	2	0			2	2	0
2-Sided Total (electronic)		0			0			1	1	2	1	1	4
2-Sided Size (electronic)		0			0			0			1	1	4
Total by account		1			1	2	2	2			2	4	4
Size by account		0			1	1	2	0			2	2	4
Key (mechanical)	Counting copies	1			1	2	2	1	2	2	1	4	4
	Counting copy cycles	1			1	2	2	2			2	4	4

0: No count 1: 1 count 2: 2 counts 3: 3 counts 4: 4 counts

7 ADJUST MODE

- Adjust mode is for adjustments to be made before shipment at the factory. As a rule, use this mode only when MFB Board UN2, or EEPROM (IC3A) on Master Board PWB-A has been replaced with a new one.

7-1. Adjust Mode Menu Screen

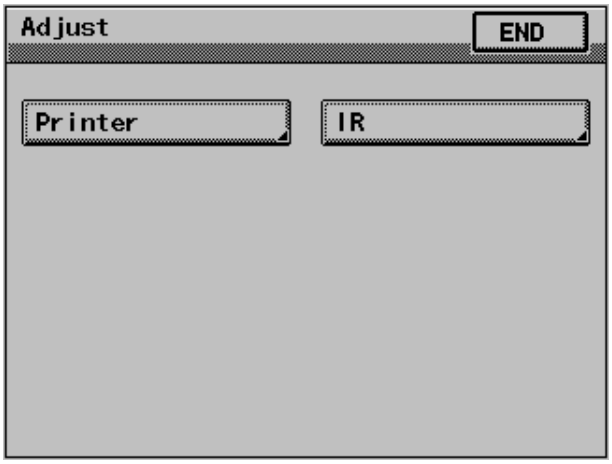

1167S012CA

7-2. Adjust Mode Function Setting Procedure

<Setting Procedure>

1. Set the copier into the Tech. Rep. mode by the following method:

- With the Meter Count screen opened from Utility, press the following keys in this order.

[Stop Key] ➡ [0] ➡ [0] ➡ [Stop Key] ➡ [0] ➡ [1]

2. Enter the Adjust mode by pressing the following keys in this order:

[Stop Key] ➡ [Start Key]

3. Select the particular Adjust mode function to be set.
4. Make the necessary settings by following the instructions given sequentially on the screen.

✻ The function selected is highlighted.

<Exiting the Mode>

Perform any one of the following steps to go back to the Basic screen.

- Press the Panel Reset key and Touch [Exit] on the Tech. Rep. Mode screen.
- Touch [END] on the Adjust mode screen. Then touch [Exit] on the Tech. Rep. Mode screen.

7-3. Adjust Mode Function Tree

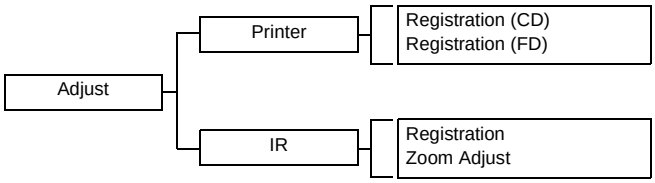

7-4. Settings in the Adjust Mode

(1) Printer

- This function is used to enter the adjustment values as they relate to the printer.

<Setting Procedure>
1. Touch [Printer] to open the Printer screen.
2. Select the desired subfunction.

Tech. Rep. Mode ▶ Adjust

<table>
<tr><th>Touch Panel Display</th><th>Setting (The default is Highlighted).</th></tr>
<tr><td>Registration (CD)</td><td>Adjust registration of the printer in the main scanning direction.
<table>
<tr><td>1st Drawer</td><td rowspan="3">-4.0mm.....0.....+4.0mm</td></tr>
<tr><td>2nd Drawer</td></tr>
<tr><td>3rd Drawer</td></tr>
<tr><td>4th Drawer</td><td rowspan="3">Advanced timing ◄——► Retarded timing</td></tr>
<tr><td>5th Drawer</td></tr>
<tr><td>Duplex</td></tr>
</table>
✻ Adjust “Duplex” after adjustments have been completed for all drawers.</td></tr>
<tr><td>Registration (FD)</td><td>Adjust registration of the printer in the sub-scanning direction.
<table>
<tr><td>-26.....0.....+26</td></tr>
<tr><td>Advanced timing ◄——► Retarded timing</td></tr>
</table></td></tr>
</table>

(2) IR

- This function is used to enter the adjustment values as they relate to the IR.

<Setting Procedure>
1. Touch [IR] to open the IR screen.
2. Select the desired subfunction.

Tech. Rep. Mode ▶ Adjust

Touch Panel Display	Setting (The default is **Highlighted**).
Registration	Adjust registration of the Scanner in the main and sub-scanning directions. -127 dot.....**0**.....+127 dot Smaller ◄——► Greater
Zoom Adjust	Adjust the scanning zoom ratio of the Scanner in the main and sub-scanning directions. 0.990.....**1.000**.....1.010 Smaller ◄——► Greater

8 INITIAL MODE

- Initial mode is used to initialize the various service functions.

8-1. Initial Mode Menu Screen

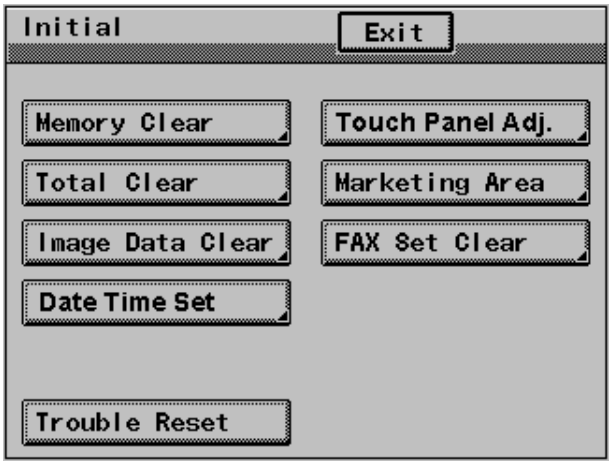

1167S013CB

8-2. Initial Mode Function Setting Procedure

<Setting Procedure>

1. Enter the Initial mode by pressing the following keys in this order:

   Warm Restart Switch ON ➡ Enter "3" from the 10-Key Pad when "." appears at the center on the left side of the screen while the start-up screen is being displayed.

2. Select the particular Initial mode function to be set.
3. Make the necessary settings by following the instructions given sequentially on the screen.

✻ The function selected is highlighted.

<Exiting the Mode>

- Touch [Exit] on the Initial mode screen to go back to the Basic screen.

8-3. Settings in the Initial Mode

Tech. Rep. Mode ▶ Initial

Touch Panel Display	Setting (The default is **Highlighted**).
Memory Clear	Clears all data except the electronic counters, Adjust, Copy Track-related, and DT-related settings. Yes / **NO**
Touch Panel Adj.	Corrects deviation in the sensitive area of the Touch Panel. <Procedure> Sequentially touch the four points marked with + on the screen as instructed by the arrow.
Total Clear	Clears all of the electronic counters and Copy Track-related data. Yes / **NO**
Marketing Area	Selects the settings for the fixed zoom ratios, paper sizes, and others according to the marketing area. **MJ** / MC / MH / Others
Image Data Clear	Clears the image data stored in file memory of the MFB Board. Yes / **NO**
FAX Set Clear	Clears the fax-related settings. ✻ Two or more items can be selected. Own Setting / The Address / Transmission Manage / Soft Switch — Yes / **NO**
Date Time Set	Sets the time-of-day and date.
Trouble Reset	Resets all malfunctions including the Fusing ones (C05XX). ✻ Malfunctions other than Fusing ones can be reset by turning OFF and ON the Power Switch and opening and closing the Side Cover.