FrameMaker Ver.5.5E(PC) Di250 TROUBLESHOOTING
99.01.08

Di250

TROUBLESHOOTING

MINOLTA

14413

CONTENTS

1. INTRODUCTION T-1
1-1. General Precautions T-1
1-2. How to Use This Book T-1
1-3. Reading the Text T-1
2. I/O CHECK T-2
2-1. Controlled Parts Check Procedure T-2
2-2. I/O Check List T-3
3. PAPER TRANSPORT FAILURE T-8
3-1. Paper Misfeed T-8
3-2. Size Error T-10
3-3. Misfeed Detection Sensor Layout T-11
3-4. Types of Misfeed Detection and Detection Timings T-12
3-5. Misfeed Troubleshooting Procedures T-14
(1) Copier Take-Up Misfeed T-14
(2) Manual Bypass Take-Up Misfeed T-16
(3) Separator/Fusing Misfeed T-18
(4) Paper Take-Up/Transport Misfeed (PF-108/PF-110) T-20
(5) Paper Take-Up/Transport Misfeed (PF-106) T-22
(6) Duplex Turnover/Take-Up Misfeed (AD-10) T-25
4. MALFUNCTION T-27
4-1. Detection Timing by Malfunction Code T-27
4-2. Troubleshooting Procedures by Malfunction Code T-30
(1) C0000: M2 Malfunction
C0010: M1 Malfunction
C0045: M3 Malfunction
C004C: M8 Malfunction
C004E: M4 Malfunction
C0070: M6 Malfunction T-30
(2) C0500: Warming-up Failure
C0510: Abnormally Low Fusing Temperature
C0520: Abnormally High Fusing Temperature T-33
(3) C0650: Faulty PC12
C0651: Faulty PC13 ..... T-35
(4) C0990: EMOT Malfunction
C0991: Lift 1 Ascent Motion Failure
C0995: HMOT Malfunction
C0999: Lift 2 Ascent Motion Failure
C099D: Communications Error T-37
(5) C0F32: Faulty E1
C0F33: ATDC Adjustment Failure T-40
(6) C10** to C13** T-41
(7) The Copier Does not Turn ON. T-42
5. IMAGE FAILURE T-43
5-1. Image Failure Troubleshooting T-43
5-2. Initial Checks T-43
5-3. Troubleshooting Procedures by Image Failure T-45

(1) Blank Copy T-46
(2) Black Copy T-46
(3) Low Image Density T-47
(4) Foggy Background T-48
(5) Black Streaks or Bands T-49
(6) Black Spots T-49
(7) Blank Streaks or Bands T-50
(8) Void Areas T-50
(9) Smear on Back T-51
(10) Uneven Image Density T-51
(11) Gradation Reproduction Failure T-51
(12) Rough Image T-52
(13) Periodically Uneven Image T-52

1 INTRODUCTION

1-1. General Precautions

1. When servicing the copier with its covers removed, use utmost care to prevent your hands, clothing, and tools from being caught in revolving parts including the chains and gears. When servicing the copier with the Rear Cover removed, be sure to fit the interlock switch actuating jig in position.
2. Before attempting to replace parts and unplug connectors, make sure that the power cord of the copier has been unplugged from the wall outlet.
3. Never create a closed circuit across connector pins except those specified in the text and on the printed circuit.
4. When creating a closed circuit and measuring a voltage across connector pins specified in the text, be sure to use the green wire (GND).
5. When the user is using a word processor or personal computer from a wall outlet of the same line, take necessary steps to prevent the circuit breaker from opening due to overloads.
6. Keep all disassembled parts in good order and keep tools under control so that none will be lost or damaged.

1-2. How to Use This Book

1. If a component on a PWB or any other functional unit including a motor is defective, the text only instructs you to replace the whole PWB or functional unit and does not give troubleshooting procedures applicable within the defective unit.
2. All troubleshooting procedures contained herein assume that there are no breaks in the harnesses and cords and all connectors are plugged into the right positions.
3. For the removal procedures of covers and parts, see DIS/REASSEMBLY, ADJUSTMENT.
4. The troubleshooting procedures are given in the order of greater frequency of trouble or order of operation.
5. The procedures preclude possible malfunctions due to noise and other external causes.

1-3. Reading the Text

1. The paper transport failure troubleshooting procedures are given according to the symptom. First identify the location where the paper is present and start the procedure for that particular location. For malfunction troubleshooting, start with step 1 and onward.
2. Make checks in numerical order of steps and, if an item is checked okay, go to the next step.

Pattern 1

Step	Check Item	Result	Action
1	Is--?	YES	Do this.
2		↑	

Go to step 2 if you answered No.

Pattern 2

Step	Check Item	Result	Action
1	Is--?	YES	Do this.
		NO	Check that.
2			↑

Go to step 2 if it checks okay.

2 I/O CHECK

2-1. Controlled Parts Check Procedure

To allow the Tech. Rep. to easily and safely determine whether a particular controlled part is fully operational, this copier provides the following provision: checking the data of the input port of the board IC with the copier in the standby state (including a misfeed, malfunction, and closure failure condition) allows the Tech. Rep. to determine whether signals are properly input to a controlled part.

<Procedure>
1. When a misfeed or malfunction occurs, locate on a circuit diagram accompanying the text the controlled part which is probably defective.
2. Select “I/O Check” from the Tech. Rep. Mode menu screen and then access the screen which contains the controlled part picked out in step 1 above. (See SWITCHES ON PWBs/TECH. REP. MODE.)
3. Check the input port data to determine if a signal is probably input to the controlled part.

<Controlled Part Check Procedure Through Checking Input Port Data>

Example
When a paper misfeed occurs in the paper take-up section of the copier, Synchronizing Roller Sensor PC2 is considered to be responsible for it.

<Procedure>
1. Remove the sheet of paper misfed.
2. From the I/O Check list, it is found that the signal input to PC2 is “Timing Roller.”
3. Select “I/O Check” from Tech. Rep. Mode and then “Printer.” Now, access the screen that contains “Timing Roller.”
4. Check that the input port data of “Timing Roller” is “0” (sensor is blocked).
5. Move the PC2 actuator to unblock the sensor.
6. Check at this time that the input port data on the screen changes from “0” to “1.”

1: PC2 is operational. 0: PC2 is faulty.

2-2. I/O Check List

<I/O Check Screens>

- The following screens are only typical and the input data shown does not necessarily represent the actual one.

IR

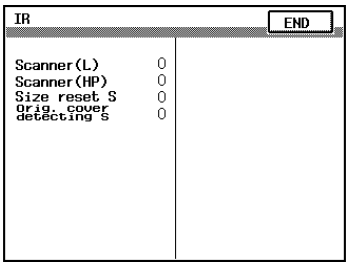

1171T002CA

Printer

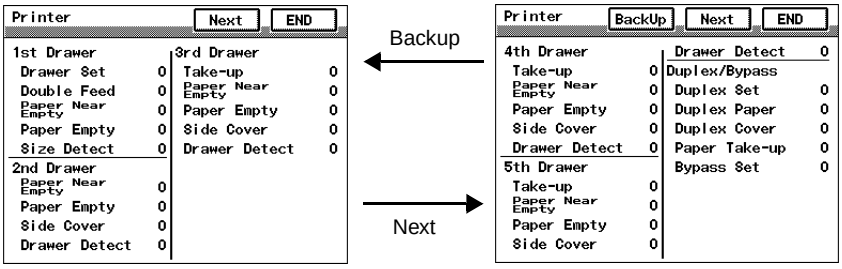

1171T030CA

1171T004CA

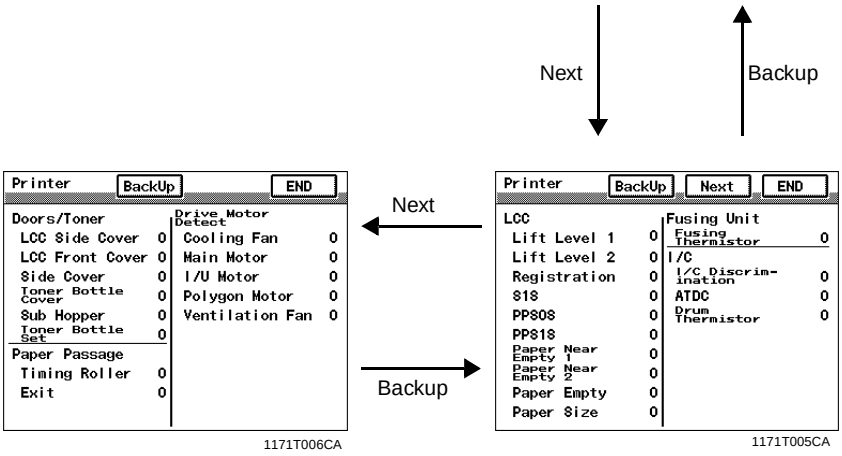

1171T006CA

1171T005CA

<I/O Check List>

IR

Symbol	Panel Display	Parts/Signal Name	Operation Characteristics/Panel Display		Input Board	IC No.	Port No.	CN/PJ No.
			1	0				
PC13	Scanner (L)	Scanner Home Position Sensor 2	Blocked	Unblocked	HGB Board	—	——	CN7HGB-27
PC12	Scanner (HP)	Scanner Home Position Sensor 1	At home	Not at home		—	——	CN7HGB-26
S5	Size reset S	Size Reset Switch	When closed	When opened		—	——	CN7HGB-24
PC14	Orig. cover detecting S	Original Cover Detecting Sensor	Within 15°	15° or more		—	——	CN7HGB-25

Printer

Symbol	Panel Display		Parts/Signal Name		Operation Characteristics/Panel Display		Input Board	IC No.	Port No.	CN/PJ No.
					1	0				
PC6	1st Drawer	Drawer Set	Cassette Set Sensor		In position	Out of position	Master Board PWB-A	IC1	PO1	PJ13A-5B
PWB-H		Double Feed	Double Feed Detecting Board		Blocked ✻1	Unblocked ✻1		IC1	PO2	PJ14A-8B
PC5		Paper Near Empty	Paper Near Empty Sensor		Unblocked	Blocked		IC1	PO3	PJ13A-2B
PC4		Paper Empty	Paper Empty Sensor		Paper not present	Paper present		IC1	PO5	PJ14A-13A
PWB-I		Size Detect	Paper Size Detecting Board		Analog value			IC1	P103/ AN3	PJ14A-1B to PJ14A-4B
S5	2nd Drawer	Paper Near Empty	Paper Near Empty Sensor		Unblocked	Blocked	Cassette Main Board PWB-A	IC1	P12	PJ3A-11B
S4		Paper Empty	Paper Empty Sensor		Paper not present	Paper present		IC1	P6	PJ3A-5B
S2		Side Cover	Side Cover Set Sensor		When opened	When closed		IC1	P9	PJ3A-8B
S1		Drawer Detect	Cassette Set Switch		In position: 2 displayed Out of position: 0 displayed			IC1	P11	PJ3A-12A
S3	3rd Drawer	Take-up	Take-Up Sensor		Paper present	Paper not present	Cassette Main Board PWB-A: PF-108/ PF-110	IC1	P5	PJ3A-2B
S5		Paper Near Empty	Paper Near Empty Sensor		Unblocked	Blocked		IC1	P12	PJ3A-11B
S4		Paper Empty	Paper Empty Sensor		Paper not present	Paper present		IC1	P6	PJ3A-5B
S2		Side Cover	Side Cover Set Sensor		When opened	When closed		IC1	P9	PJ3A-8B
S1		Drawer Detect	Cassette Set Switch	When PF-110 is used	In position	Out of position		IC1	P10	PJ3A-9A
				When PF-108 is used	In position: 2 displayed Out of position: 0 displayed			IC1	P11	PJ3A-12A

✻ 1: The display of 1 or 0 is selected only while Main Motor M2 is being energized.

Symbol	Panel Display		Parts/Signal Name		Operation Characteristics/Panel Display		Input Board	IC No.	Port No.	CN/PJ No.
					1	0				
S3	4th Drawer	Take-up	Take-Up Sensor		Paper present	Paper not present	Cassette Main Board PWB-A: PF-108/ PF-110	IC1	P5	PJ3A-2B
S5		Paper Near Empty	Paper Near Empty Sensor		Unblocked	Blocked		IC1	P12	PJ3A-11B
S4		Paper Empty	Paper Empty Sensor		Paper not present	Paper present		IC1	P6	PJ3A-5B
S2		Side Cover	Side Cover Set Sensor		When opened	When closed		IC1	P9	PJ3A-8B
S1		Drawer Detect	Cassette Set Switch	When PF-110 is used	In position	Out of position		IC1	P10	PJ3A-9A
				When PF-108 is used	In position: 2 displayed Out of position: 0 displayed			IC1	P11	PJ3A-12A
S3	5th Drawer	Take-up	Take-Up Sensor		Paper present	Paper not present		IC1	P5	PJ3A-2B
S5		Paper Near Empty	Paper Near Empty Sensor		Unblocked	Blocked		IC1	P12	PJ3A-11B
S4		Paper Empty	Paper Empty Sensor		Paper not present	Paper present		IC1	P6	PJ3A-5B
S2		Side Cover	Side Cover Set Sensor		When opened	When closed		IC1	P9	PJ3A-8B
S1		Drawer Detect	Cassette Set Switch	When PF-110 is used	In position	Out of position		IC1	P10	PJ3A-9A
				When PF-108 is used	In position: 2 displayed Out of position: 0 displayed			IC1	P11	PJ3A-12A
——	Duplex/ Bypass	Duplex Set	Duplex Unit Set signal		In position	Out of position	Master Board PWB-A	IC1	P91	PJ4A-3B
PI1		Duplex Paper	Duplex Unit Transport Sensor		Paper present	Paper not present		IC1	P92	PJ4A-2B
S2		Duplex Cover	Duplex Unit Door Set Sensor		When opened	When closed		IC1	P90	PJ4A-1B
PC8		Paper Take-up	Manual Feed Paper Take-Up Sensor		Paper present	Paper not present		IC1	P00	PJ4A-7B
——		Bypass Set	Manual Bypass Tray Set signal		In position	Out of position		IC1	P30	PJ4A-9B

Symbol	Panel Display		Parts/Signal Name	Operation Characteristics/Panel Display		Input Board	IC No.	Port No.	CN/PJ No.
				1	0				
LS1	LCC	Lift Level 1	Lift-Up Sensor 1	At upper limit	Not at upper limit	LCC Main Board PWB-A: PF-106	IC4	P74/ ANI4	CN4A-6
LS2		Lift Level 2	Lift-Up Sensor 2	At upper limit	Not at upper limit		IC4	P73/ ANI3	CN4A-9
RSEN		Registration	Registration Sensor	Paper present	Paper not present		IC4	P22/ INTP1	CN4A-2
S1		S1S	Paper Standby Position Sensor	Paper present ✻2	Paper not present ✻2		IC4	P23/ INTP2/ CI	CN3A-5
PPS0		PPS0S	LCC Take-Up Sensor	Paper present	Paper not present		IC4	P24/ INTP3	CN4A-11
PPS1		PPS1S	Paper Empty Sensor 1	Paper present	Paper not present		IC4	P25/ INTP4/ ASCK	CN3A-2
RS1		Paper Near Empty 1	Paper Near Empty Sensor 1	Blocked	Unblocked		IC4	P75/ ANI5	CN6A-1
RS2		Paper Near Empty 2	Paper Near Empty Sensor 2	Blocked	Unblocked		IC4	P76/ ANI6	CN5A-5
PPS2		Paper Empty	Paper Empty Sensor 2	Paper present	Paper not present		IC4	P72/ ANI2	CN3A-8
SW1		Paper Size	DIP switch	Letter C: 0 displayed A4C: 1 displayed B5C: 2 displayed			IC4	P13, P14, P15	———
TH1	Fusing Unit	Fusing Thermistor	Fusing Roller Thermistor	Analog value		Master Board PWB-A	IC1	P107/ AN7	PJ16A-5
——	I/C	I/C Discrimination	I/C Type Detection signal	Analog value			IC1	P100/ AN0	PJ15A-3
E1		ATDC	ATDC Sensor	Analog value			IC1	P106/ AN6	PJ15A-5
TH2		Drum Thermistor	I/C Thermistor	Analog value			IC1	P104/ AN4	PJ13A-10A

✻ 2: The display of 1 or 0 is selected only while LCC Transport Motor HMOT is being energized.

Symbol	Panel Display		Parts/Signal Name	Operation Characteristics/Panel Display		Input Board	IC No.	Port No.	CN/PJ No.
				1	0				
SIDE	Doors/ Toner	LCC Side Cover	Side Cover Set Sensor	When opened	When closed	LCC Main Board PWB-A	IC4	P34/ T00	CN3A-12
FRONT		LCC Front Cover	LCC Set Sensor	Out of position	In position		IC4	P35/ T01	CN6A-4
S2		Side Cover	Side Cover Interlock Switch	When opened	When closed	Master Board PWB-A	IC1	P31	PJ7A-1
PC11		Toner Bottle Cover	Toner Bottle Cover Sensor	When opened	When closed		IC1	P33	PJ11A-5B
S4		Sub Hopper	Sub Hopper Toner Empty Switch	Toner not loaded: 1 and 0 alternately displayed. Toner loaded: 0 displayed			IC1	P06	PJ11A-7B
PC10		Toner Bottle Set	Toner Bottle Home Position Sensor	At home	Not at home		IC1	P40	PJ11A-2B
PC2	Paper Passage	Timing Roller	Synchronizing Roller Sensor	Paper present	Paper not present		IC1	P41	PJ13A-7A
PC3		Exit	Paper Exit Sensor	Paper present	Paper not present		IC1	P77	PJ13A-12A
M3	Drive Motor Detect	Cooling Fan	Fusing Cooling Fan Motor/LOCK	When energized: 1 and 0 alternately displayed. When deenergized: 0 displayed			IC1	P04	PJ13A-5A
M2		Main Motor	Main Motor/LOCK	When energized	When deenergized		IC1	P43	PJ16A-2
M1		I/U Motor	I/C Motor/LOCK	When energized	When deenergized		IC1	P42	PJ16A-4
M10		Polygon Motor	Polygon Motor/ LOCK	When energized	When deenergized		IC1	P95	PJ8A-4
M8		Ventilation Fan	Ozone Fan Motor	When energized: 1 and 0 alternately displayed. When deenergized: 0 displayed			IC1	P51	PJ11A-3A

3 PAPER TRANSPORT FAILURE

3-1. Paper Misfeed

When a paper misfeed occurs, the Touch Panel shows the corresponding message, misfeed location, and paper location.

⊗ display	Misfeed location
○ display	Paper location

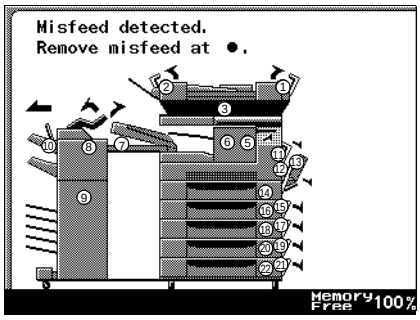

1167T007CA

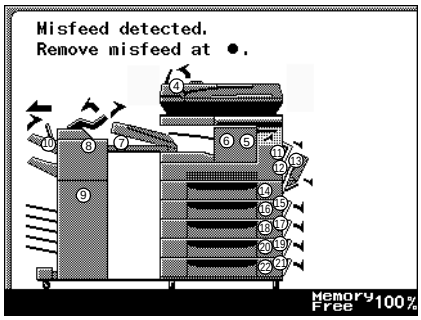

1167T008CA

⊗ or ○ Display	Misfeed/Paper Location	Ref. Page
1	AFR-14 take-up, AFR-14 single feed	See the relevant option service manual.
2	AFR-14 reverse, AFR-14 exit	
3	AFR-14 transport	
4	AF-6 take-up, AF-6 transport	
5	JS-200 transport, OT-100 transport	
6	JS-200 exit, OT-100 exit	
7	Horizontal transport	
8	Finisher transport, 1st Tray exit, Elevator Tray exit	
9	Mailbin transport	
10	Finisher Tray	
11	Separator, Fusing Unit	(3)
12	Manual Bypass take-up	(2)
13	Duplex turnover, Duplex take-up (AD-10)	(6)
14	1st Drawer take-up	(1)
15	2nd Drawer transport	(1)
16	2nd Drawer take-up	(1)
17	3rd Drawer transport (PF-108/PF-110/PF-106)	(4) or (5)
18	3rd Drawer take-up (PF-108/PF-110/PF-106)	(4) or (5)
19	4th Drawer transport (PF-108/PF-110/PF-106)	(4) or (5)
20	4th Drawer take-up (PF-108/PF-110/PF-106)	(4) or (5)
21	5th Drawer transport (PF-108/PF-110)	(4)
22	5th Drawer take-up (PF-108/PF-110)	(4)

✻ If a communications error occurs between UN2 and PWB-A during a copy cycle, it forces a paper misfeed condition (○ displayed on the Touch Panel). If that happens, check the circuit between UN2 and PWB-A for proper connection and, if it is intact, replace the board.

<Resetting the Display>

Misfeed in the copier	Misfeed in the option
Remove all sheets of paper misfed and left inside, and then open and close the Side Cover.	Remove all sheets of paper misfed and left inside, and then raise and lower or disconnect and reconnect the option.

✻ If the misfeed display is not reset by these procedures, check the misfeed detecting sensor at the paper location.

3-2. Size Error

The following warning screen appears after a misfeed display has been reset if the actual size of the paper loaded in a paper source differs from the paper size set for that particular paper source.

[1st to 5th Drawer]

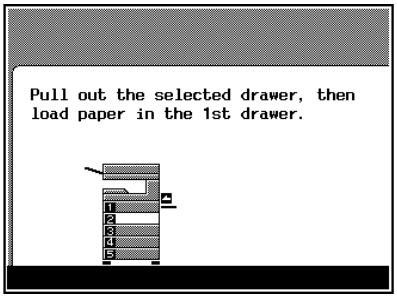

1171T009CA

[Manual Bypass]

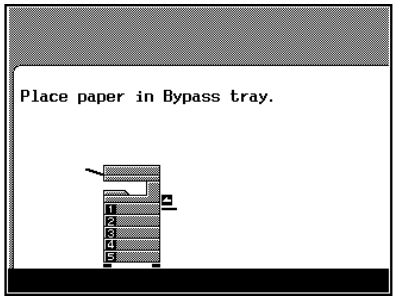

1171T010CA

✻ 1st to 5th Drawer: A size error is indicated by a highlighted paper source in the copier overview display. (In the above example, there is a size error in the 2nd Drawer.)

<Resetting the Size Error Display>
Slide out the drawer, then slide it back in, or load paper in the Manual Bypass Tray.

<Causes of a Size Error>
- Wrong paper size settings have been made.
- The user loads paper of a size different from what is set for the paper source.
- Two or more sheets of paper are being taken up and fed in.

3-3. Misfeed Detection Sensor Layout

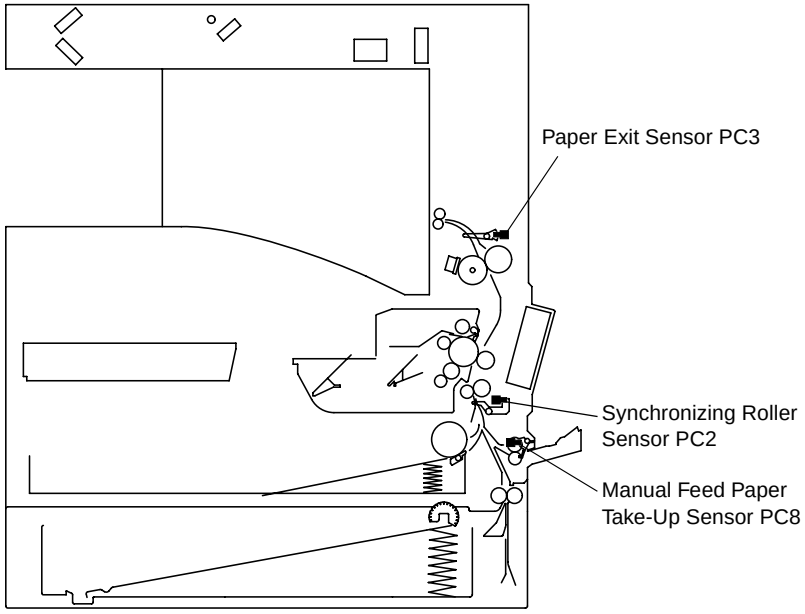

1167T021AA

3-4. Types of Misfeed Detection and Detection Timings

- The following are the types of misfeed detection and detection timings for different misfeed locations.

NOTE
For misfeed detection types and detection timings of options, see the relevant option service manual.

<Copier Take-Up Misfeed>

Type	Detection Timing	Timer Value T (sec.)
Paper take-up failure detection	• 1st Drawer paper take-up: Synchronizing Roller Sensor PC2 is not unblocked (H) even after the lapse of T sec. after Paper Take-Up Solenoid SL1 has been energized for the second paper take-up retry sequence.	1.28
	• 2nd Drawer paper take-up: PC2 is not unblocked (H) even after the lapse of T sec. after SL1 has been energized for the first paper take-up retry sequence.	2.27
	• 1st/2nd Drawer paper take-up: PC2 is unblocked (H) within T sec. after SL1 has been energized.	0.20

<Manual Bypass Take-Up Misfeed>

Type	Detection Timing	Timer Value T (sec.)
Bypass paper take-up failure detection	PC2 is not unblocked (H) even after T sec. after Manual Feed Paper Take-Up Clutch CL3 has been energized.	0.89
	PC2 is unblocked (H) within T sec. after CL3 has been energized.	0.20
Paper left	Manual Feed Paper Take-Up Sensor PC8 is blocked (L) when the Power Switch is turned ON, CPU is reset, or cover is opened and closed.	———

<Separator Misfeed>

Type	Detection Timing	Timer Value T (sec.)
Leading edge detection by Paper Exit Sensor PC3	PC3 is not blocked (L) even after the lapse of T sec. after PC2 has been unblocked (H).	1.92 ✻
Trailing edge detection by Synchronizing Roller Sensor PC2	PC2 is not blocked (L) even after the lapse of T sec. after it has been unblocked (H).	4.20 ✻
	PC2 is blocked (L) within T sec. after it has been unblocked (H).	1.05
Paper is stationary	During a sequence of detecting a paper size based on the period of time between when Synchronizing Clutch CL1 is energized and when PC2 is blocked (L), the paper size detected is longer than the size data sent from the controller by +260 mm or more.	———
Size error detection	The paper size detected based on the period of time between when CL1 is energized and when PC2 is blocked (L) is more than the size data sent from the controller by ±20 mm or more.	———
Paper left	PC2 is unblocked (H) when the Power Switch is turned ON, CPU is reset, or cover is opened and closed.	———

✻ Excludes the period of time during which the paper is stationary before the Synchronizing Roller.

<Fusing Misfeed>

Type	Detection Timing	Timer Value T (sec.)
Trailing edge detection by Paper Exit Sensor PC3	PC3 is not unblocked (H) even after the lapse of T sec. after PC2 has been blocked (L).	1.96
Paper left	PC3 is blocked (L) when the Power Switch is turned ON, CPU is reset, or cover is opened and closed.	———

3-5. Misfeed Troubleshooting Procedures

(1) Copier Take-Up Misfeed

Relevant Electrical Parts	
Paper Take-Up Solenoid SL1	Master Board PWB-A
Synchronizing Roller Sensor PC2	Cassette Main Board PWB-A

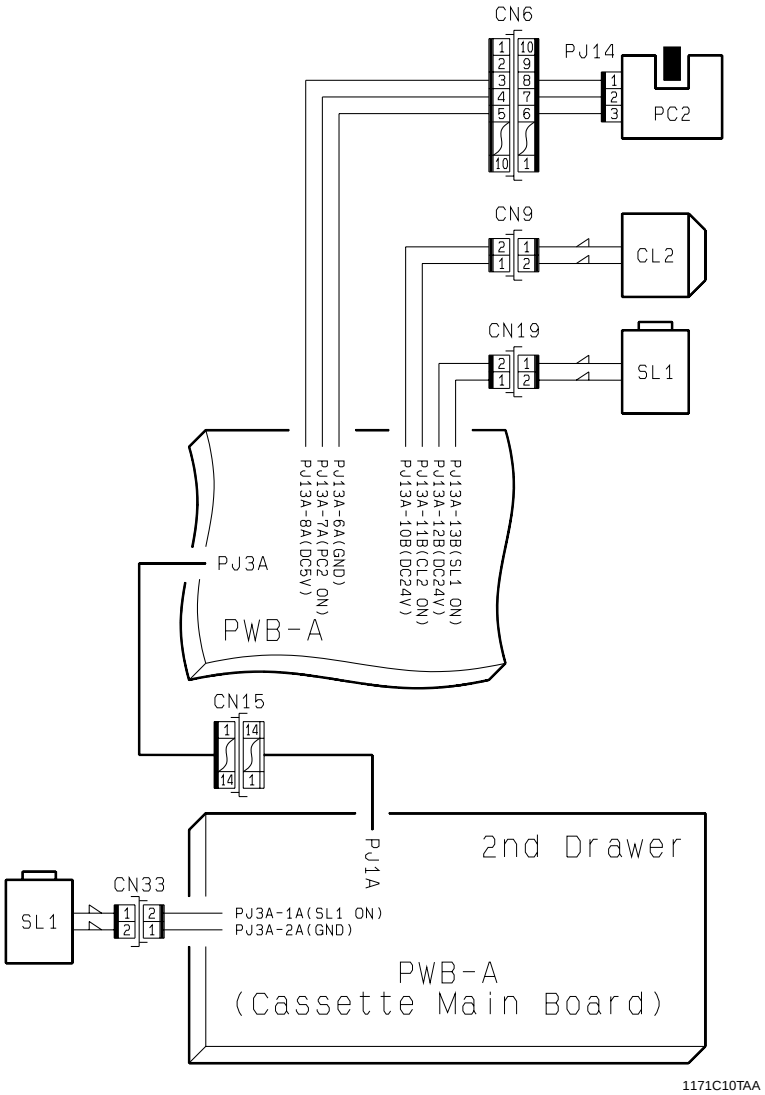

<Copier Take-Up Misfeed Troubleshooting Procedure>

Symptom	Step	Check Item	Result	Action
Paper is not taken up at all.	1	Does the paper being used meet the product specifications?	NO	Instruct the user to use the paper that meets product specifications.
	2	Is the paper curled, wavy, or damp?	YES	Change the paper. Instruct the user on the storage of paper.
	3	Are the Edge Guide and Trailing Edge Stop (of the drawer) positioned to the exact size of the paper used?	NO	Slide the guides to the exact size of the paper.
	4	Is the Paper Take-Up Roll deformed, worn, or dirty with paper dust?	YES	Clean or change the Paper Take-Up Roll.
	5	If the Paper Lifting Plate dirty or deformed?	YES	Clean or change the Paper Lifting Plate.
	6	Has the misfeed been detected while the Multi Purpose Cassette was being used?	YES	Check steps 7 and 8.
			NO	Check steps 9 and onward.
	7	Is the Paper Separator Pad deformed, worn, or dirty with paper dust?	YES	Clean or change the Paper Separator Pad.
	8	Check SL1 for operation. Does the voltage across CN19-1 on the PWB-A side and GND change from DC24V to DC0V when the Start key is pressed?	YES	Check various parts for possible overload and, if they are okay, change SL1.
			NO	Change PWB-A.
	9	Is the Paper Separator Finger dirty or deformed?	YES	Clean or change the Paper Separator Finger.
	10	Check CL2 for operation. Does the voltage across CN9-1 on the PWB-A side and GND change from DC24V to DC0V when the Start key is pressed?	NO	Change PWB-A.
	11	Check SL1 for operation. Does the voltage across PJ3A-1A on PWB-A (Cassette Main Board) and GND change from LOW to HIGH when the Start key is pressed?	YES	Check various parts for possible overload and, if they are okay, change SL1 or CL2.
			NO	Change PWB-A (Cassette Main Board) or PWB-A.
• Paper is at a stop before the vertical transport section. • Paper is at a stop near the Synchronizing Rollers.	1	Is the Vertical Transport Roller deformed, worn, or dirty with paper dust?	YES	Clean or change the Vertical Transport Roller.
	2	If the Vertical Transport Guide Plate dirty or deformed?	YES	Clean or change the Vertical Transport Guide Plate.
	3	Is PC2 fully operational? Check the input data using I/O Check.	YES	Check various parts for possible overload and, if they are okay, change PWB-A.
			NO	Check the PC2 actuator for operation and, if it is intact, change PC2.

(2) Manual Bypass Take-Up Misfeed

Relevant Electrical Parts	
Manual Feed Paper Take-Up Clutch CL3	Manual Feed Paper Take-Up Sensor PC8
Synchronizing Roller Sensor PC2	Master Board PWB-A

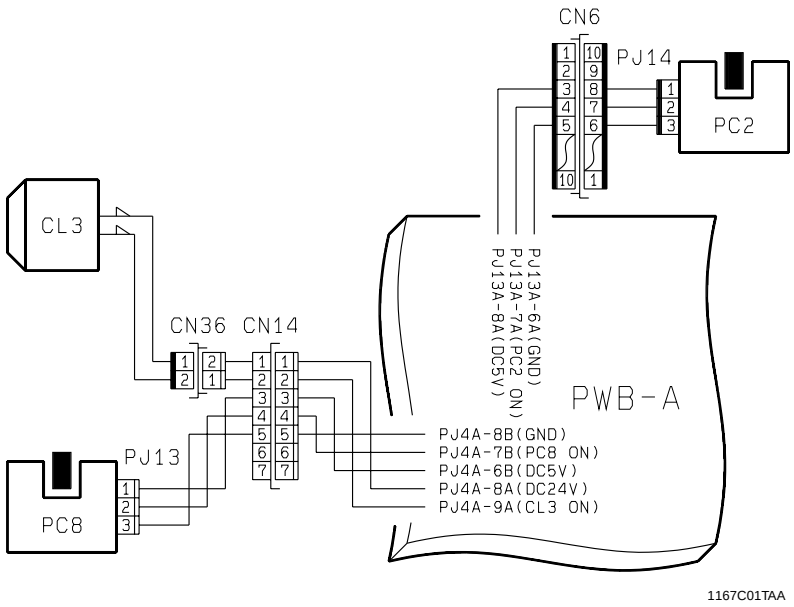

<Manual Bypass Take-Up Misfeed Troubleshooting Procedure>

Symptom	Step	Check Item	Result	Action
Paper is not taken up at all.	1	Does the paper being used meet the product specifications?	NO	Instruct the user to use the paper that meets product specifications.
	2	Is the paper curled, wavy, or damp?	YES	Change the paper. Instruct the user on the storage of paper.
	3	Is the Manual Feed Paper Take-Up Roller or Roll deformed, worn, or dirty with paper dust?	YES	Clean or change the Manual Feed Paper Take-Up Roller or Roll.
	4	Is PC8 fully operational? Check the input data using I/O Check.	NO	Check the PC8 actuator for operation and, if it is intact, change PC8.
	5	Check CL3 for operation. Does the voltage across CN14-2 and GND change from DC24V to DC0V when the misfeed condition is reset?	YES	Check various parts for possible overload and, if they are okay, change CL3.
			NO	Change PWB-A.
Paper is at a stop near the Synchronizing Rollers.	1	Is PC2 fully operational? Check the input data using I/O Check.	YES	Check various parts for possible overload and, if they are okay, change PWB-A.
			NO	Check the PC2 actuator for operation and, if it is intact, change PC2.

(3) Separator/Fusing Misfeed

Relevant Electrical Parts	
Paper Exit Sensor PC3	Synchronizing Clutch CL1
Synchronizing Roller Sensor PC2	Master Board PWB-A

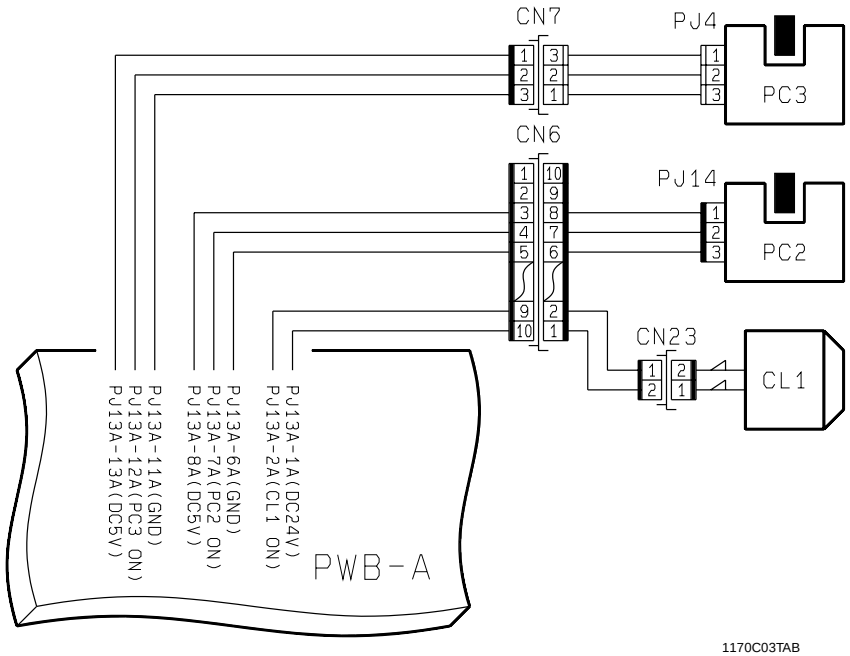

1170C03TAB

<Separator/Fusing Misfeed Troubleshooting Procedure>

Symptom	Step	Check Item	Result	Action
Paper is at a stop near the Synchronizing Rollers.	1	Are the Synchronizing Rollers deformed, worn, or dirty with paper dust?	YES	Clean or change the Synchronizing Rollers.
	2	Is a good length of loop formed before the Synchronizing Rollers?	NO	Select the following functions in this order: Tech. Rep. Mode → Tech. Rep. Choice → Printer → Loop Adjustment and make the loop adjustment.
	3	Is a size error displayed when the misfeed display is reset?	YES	Check that the size of the paper actually loaded in the current paper source matches the size set for it.
	4	Is PC2 fully operational? Check the input data using I/O Check.	NO	Check the PC2 actuator for operation and, if it is intact, change PC2.
	5	Check CL1 for operation. Does the voltage across CN6-9 on the PWB-A side and GND change from DC24V to DC0V when the Start key is pressed?	YES	Check various parts for possible overload and, if they are okay, change CL1.
			NO	Change PWB-A.
Paper is at a stop near the PC Drum.	1	Is the Pre-Image Transfer Guide Plate dirty or deformed?	YES	Clean or change the guide plate.
	2	Is the Image Transfer Roller deformed, worn, or dirty with paper dust?	YES	Clean or change the Image Transfer Roller.
Paper is wedged at the PC Drum Paper Separator Fingers.	1	Are the PC Drum Paper Separator Fingers dirty or deformed?	YES	Clean or change the separator fingers.
			NO	Check the clearance between the PC Drum Paper Separator Fingers and PC Drum.
Paper is at a stop before the Fusing Rollers.	1	Is the Fusing Guide Plate dirty or deformed?	YES	Clean or change the Fusing Guide Plate.
Paper is at a stop at the Fusing Rollers.	1	Are the Fusing Rollers deformed, worn, or dirty with paper dust?	YES	Clean or change the Fusing Rollers.
	2	Are the Fusing Separator Fingers dirty or deformed?	YES	Clean, correct, or change the Fusing Separator Fingers.
Paper is at a stop at the exit section.	1	Is the Paper Exit Roller deformed, worn, or dirty with paper dust?	YES	Clean or change the Paper Exit Roller.
	2	Is PC3 fully operational? Check the input data using I/O Check.	YES	Check various parts for possible overload and, if they are okay, change PWB-A.
			NO	Check the PC3 actuator for operation and, if it is intact, change PC3.

(4) Paper Take-Up/Transport Misfeed (PF-108/PF-110)

Relevant Electrical Parts	
Paper Take-Up Solenoid SL1	Master Board PWB-A
Take-Up Sensor S3	Cassette Main Board PWB-A
Synchronizing Roller Sensor PC2	Cassette Main Board PWB-A: PF-108/PF-110
Transport Clutch CL2	

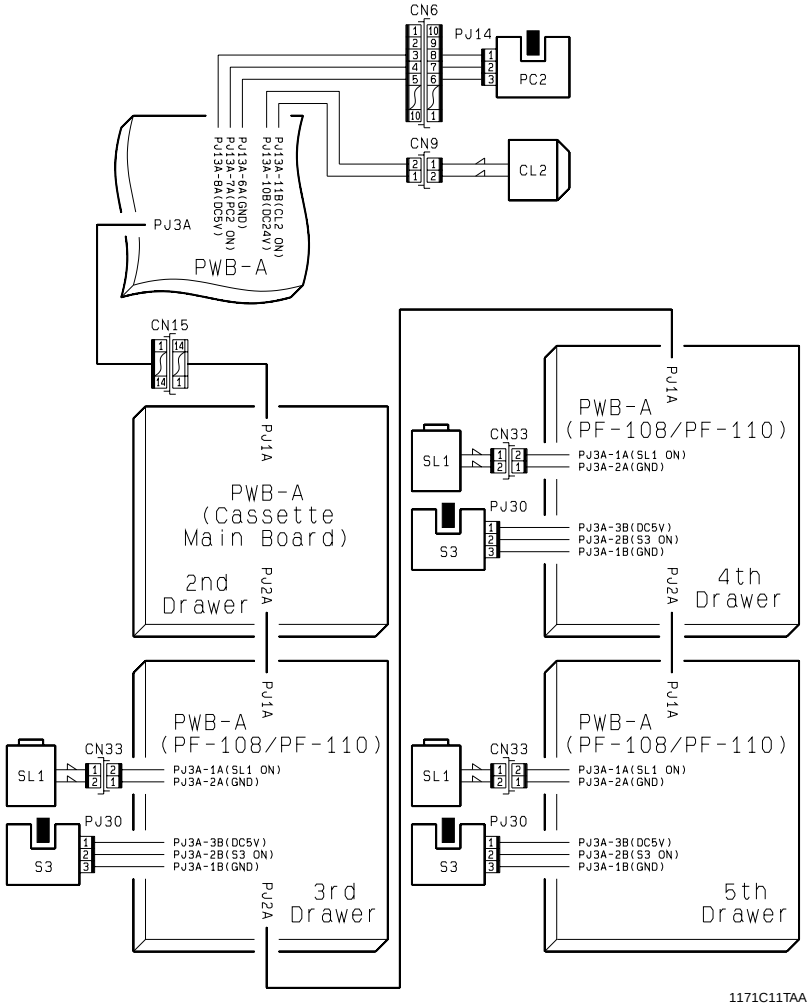

<Paper Take-Up/Transport Misfeed (PF-108/PF-110) Troubleshooting Procedure>

Symptom	Step	Check Item	Result	Action
Paper is not taken up at all.	1	Does the paper being used meet the product specifications?	NO	Instruct the user to use the paper that meets product specifications.
	2	Is the paper curled, wavy, or damp?	YES	Change the paper. Instruct the user on the storage of paper.
	3	Are the Edge Guide and Trailing Edge Stop (of the drawer) positioned to the exact size of the paper used?	NO	Slide the guides to the exact size of the paper.
	4	Is the Paper Take-Up Roll deformed, worn, or dirty with paper dust?	YES	Clean or change the Paper Take-Up Roll.
	5	Is the Paper Lifting Plate dirty or deformed?	YES	Clean or change the Paper Lifting Plate.
	6	Is the Paper Separator Finger dirty or deformed?	YES	Clean or change the Paper Separator Finger.
	7	Check CL2 for operation. Does the voltage across CN9-1 on the PWB-A side and GND change from DC24V to DC0V when the Start key is pressed?	NO	Change PWB-A.
	8	Check SL1 for operation. Does the voltage across PJ3A-1A on PWB-A (PF-108/PF-110) and GND change from LOW to HIGH when the Start key is pressed?	YES	Check various parts for possible overload and, if they are okay, change SL1 or CL2.
			NO	Change PWB-A (PF-108/PF-110), PWB-A (Cassette Main Board), or PWB-A, in that order.
• Paper is at a stop at the vertical transport section. • Paper is at a stop near the Synchronizing Rollers.	1	Is the Vertical Transport Roller deformed, worn, or dirty with paper dust?	YES	Clean or change the Vertical Transport Roller.
	2	Is the Vertical Transport Guide Plate dirty or deformed?	YES	Clean or change the Vertical Transport Guide Plate.
	3	Is a size error displayed when the misfeed display is reset?	YES	Check that the size of the paper loaded in the current drawer matches the size set for that drawer.
	4	✻ A misfeed is detected at the transport section of the 3rd Drawer. Is PC2 fully operational? Check the input data using I/O Check.	NO	Check the PC2 actuator for operation and, if it is intact, change PC2.
	5	Are all S3's fully operational? Check the input data using I/O Check.	YES	Check various parts for possible overload and, if they are okay, change PWB-A.
	6	Does the voltage across PJ3A-2B on PWB-A (PF-108/PF-110) and GND change to DC0V when S3 is blocked and to DC5V when S3 is unblocked?	YES	Change PWB-A (PF-108/PF-110) or PWB-A (Cassette Main Board).
			NO	Check the S3 actuator for operation and, if it is intact, change S3.

(5) Paper Take-Up/Transport Misfeed (PF-106)

Relevant Electrical Parts	
Take-Up Clutch 1 P1CL	Synchronizing Roller Sensor PC2
Take-Up Clutch 2 P2CL	Transport Clutch CL2
Paper Empty Sensor 1 PPS1	Take-Up Sensor S3
Paper Standby Position Sensor S1	LCC Main Board PWB-A: PF-106
Separator Clutch BCL	Cassette Main Board PWB-A: PF-108/PF-110
Registration Clutch RCL	Cassette Main Board PWB-A
Registration Sensor RSEN	Master Board PWB-A

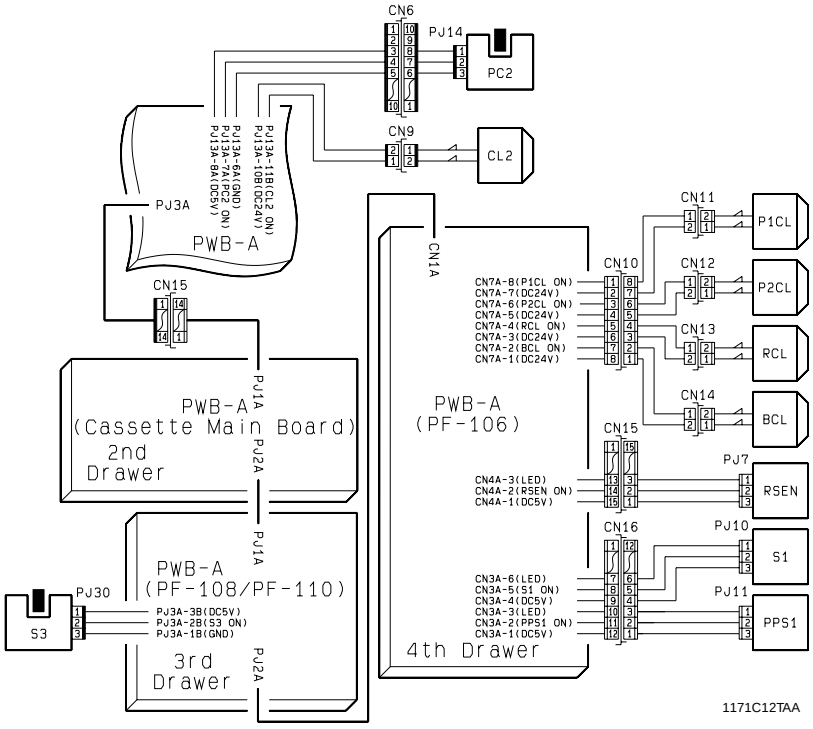

<Paper Take-Up/Transport Misfeed (PF-106) Troubleshooting Procedure>

Symptom	Step	Check Item	Result	Action
• Paper is not taken up at all. • Paper is at a stop before the Paper Feed/ Separator Rolls.	1	Does the paper being used meet the product specifications?	NO	Instruct the user to use the paper that meets product specifications.
	2	Is the paper curled, wavy, or damp?	YES	Change the paper. Instruct the user on the storage of paper.
	3	Is the Paper Take-Up Roll deformed, worn, or dirty with paper dust?	YES	Clean or change the Paper Take-Up Roll.

Symptom	Step	Check Item	Result	Action
• Paper is not taken up at all. • Paper is at a stop before the Paper Feed/ Separator Rolls.	4	Is PPS1 fully operational? Check the input data using I/O Check.	YES	Perform steps 6 and onward.
	5	Does the voltage across CN3A-2 on PWB-A (PF-106) and GND change from LOW to HIGH when PPS1 is blocked?	YES	Change PWB-A (PF-106), PWB-A (PF-108/PF-110), or PWB-A (Cassette Main Board), in that order.
			NO	Change PPS1.
	6	Is paper fed up to S1 when paper is loaded in Lift 2 only and the drawer is slid into the copier?	YES	Perform steps 8 and onward.
	7	Check P2CL for operation. Does the voltage across CN7A-6 on PWB-A (PF-106) and GND change from DC24V to DC0V when step 6 is performed again?	YES	Check various parts for possible overload and, if they are okay, change P2CL.
			NO	Change PWB-A (PF-106), PWB-A (PF-108/PF-110), PWB-A (Cassette Main Board), or PWB-A, in that order.
	8	Check P1CL for operation. Does the voltage across CN7A-8 on PWB-A (PF-106) and GND change from DC24V to DC0V when step 6 is performed again?	NO	Change PWB-A (PF-106), PWB-A (PF-108/PF-110), PWB-A (Cassette Main Board), or PWB-A, in that order.
	9	Is S1 fully operational? Check the input data using I/O Check. Does the "S1S" input signal change from 0 to 1 when the drawer loaded with paper is slid into the copier?	YES	Perform steps 11 and onward.
	10	Does the voltage across CN3A-5 on PWB-A (PF-106) and GND change from LOW to HIGH when step 9 is performed again?	YES	Change PWB-A (PF-106), PWB-A (PF-108/PF-110), or PWB-A (Cassette Main Board), in that order.
			NO	Change S1.
	11	Is the Paper Feed Roll or Separator Roll deformed, worn, or dirty with paper dust?	YES	Clean or change the Paper Feed Roll or Separator Roll.
	12	Check BCL for operation. Does the voltage across CN7A-2 on PWB-A (PF-106) and GND change from DC24V to DC0V when the Start key is pressed?	YES	Check various parts for possible overload and, if they are okay, change P1CL or BCL.
			NO	Change PWB-A (PF-106), PWB-A (PF-108/PF-110), PWB-A (Cassette Main Board), or PWB-A, in that order.

Symptom	Step	Check Item	Result	Action
• Paper is at a stop at the vertical transport section. • Paper is at a stop near the Synchronizing Rollers.	1	Is the Vertical Transport Roller or Roll deformed, worn, or dirty with paper dust?	YES	Clean or change the Vertical Transport Roller or Roll.
	2	Is RSEN fully operational? Check the input data using I/O Check.	YES	Check step 4 and onward.
	3	Does the voltage across CN4A-2 on PWB-A (PF-106) and GND change from LOW to HIGH when RSEN is blocked?	YES	Change PWB-A (PF-106), PWB-A (PF-108/PF-110), or PWB-A (Cassette Main Board), in that order.
			NO	Change RSEN.
	4	Check RCL for operation. Does the voltage across CN7A-4 on PWB-A (PF-106) and GND change from DC24V to DC0V when the Start key is pressed?	NO	Change PWB-A (PF-106), PWB-A (PF-108/PF-110), PWB-A (Cassette Main Board), or PWB-A, in that order.
	5	Check CL2 for operation. Does the voltage across CN9-1 on PWB-A and GND change from DC24V to DC0V when the Start key is pressed?	NO	Change PWB-A.
	6	✻ If the 3rd Drawer is PF-106 Is PC2 fully operational? Check the input data using I/O Check.	YES	Check various parts for possible overload and, if they are okay, change RCL, CL2, or PWB-A, in that order.
			NO	Check the PC2 actuator for operation and, if it is intact, change PC2.
	7	✻ If the 4th Drawer is PF-106 Is S3 fully operational? Check the input data using I/O Check.	YES	Check various parts for possible overload and, if they are okay, change RCL, CL2, or PWB-A, in that order.
	8	Does the voltage across PJ3A-2B on PWB-A (PF-108/PF-110) and GND change to DC0V when S3 is blocked and to DC5V when S3 is unblocked?	YES	Change PWB-A (PF-108/PF-110) or PWB-A (Cassette Main Board).
			NO	Check the S3 actuator for operation and, if it is intact, change S3.

(6) Duplex Turnover/Take-Up Misfeed (AD-10)

Relevant Electrical Parts	
Paper Exit Sensor PC3	Duplex Unit Transport Motor M2
Duplex Unit Transport Sensor PI1	Manual Feed Paper Take-Up Clutch CL3
Synchronizing Roller Sensor PC2	Master Board PWB-A
Switchback Motor M1	Duplex Main Board PWB-A: AD-10

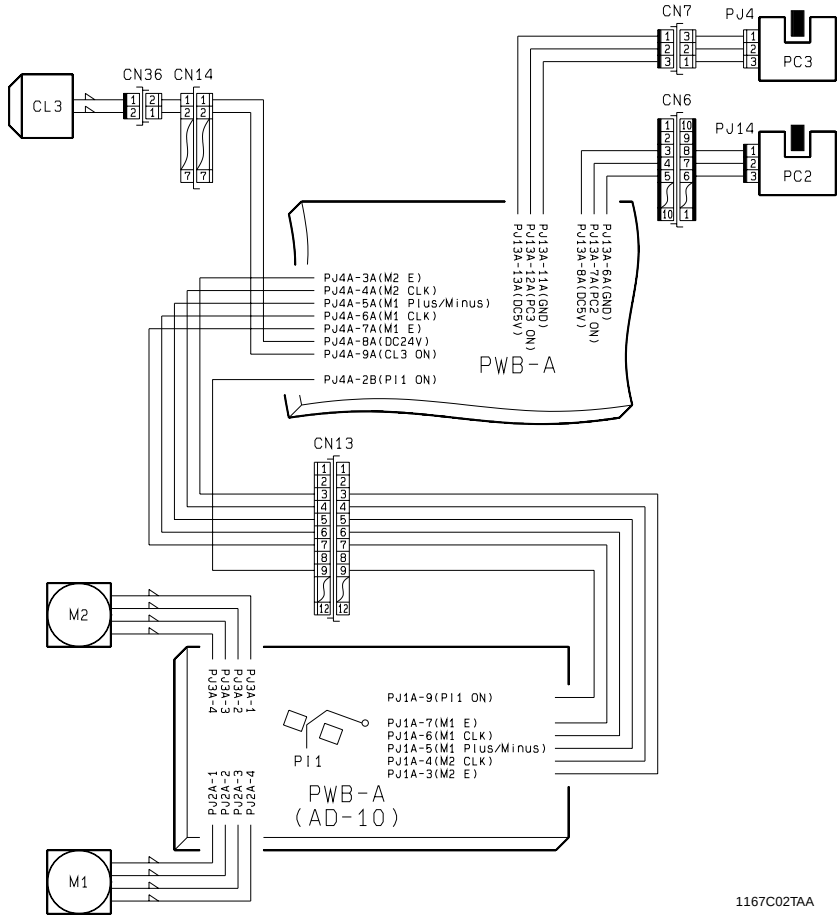

<Duplex Turnover/Take-Up Misfeed (AD-10) Troubleshooting Procedure>

Symptom	Step	Check Item	Result	Action
Paper is at a stop near the exit section.	1	Is the Paper Exit Roller deformed, worn, or dirty with paper dust?	YES	Clean or change the Paper Exit Roller.
	2	Is PC3 fully operational? Check the input data using I/O Check.	NO	Check the PC3 actuator for operation and, if it is intact, change PC3.
	3	Check M1 for operation. Does the voltage across PJ1A-7 on PWB-A (AD-10) and GND change from DC5V to DC0V during a 2-sided copy cycle?	YES	Check gears for proper engagement.
			NO	Change PWB-A.
	4	Does the voltage across PJ1A-5 on PWB-A (AD-10) and GND change from DC5V to DC0V during a 2-sided copy cycle?	YES	Check various parts for possible overload and, if they are okay, change M1 or PWB-A (AD-10).
			NO	Change PWB-A.
Paper is at a stop inside the Duplex Unit.	1	Is the Duplex Unit Transport Roller or Roll deformed, worn, or dirty with paper dust?	YES	Clean or change the Duplex Unit Transport Roller or Roll.
	2	Is a torn piece of paper present on the paper path surface?	YES	Remove the torn piece of paper.
	3	Is the Manual Feed Take-Up Roller or Roll deformed, worn, or dirty with paper dust?	YES	Clean or change the Manual Feed Take-Up Roller or Roll.
	4	Check M2 for operation. Does the voltage across PJ1A-3 on PWB-A (AD-10) and GND change from DC5V to DC0V during a 2-sided copy cycle?	YES	Check gears for proper engagement.
			NO	Change PWB-A.
	5	Is PI1 fully operational? Check the input data using I/O Check.	NO	Check the PI1 actuator for operation and, if it is intact, change PWB-A (AD-10).
	6	Check CL3 for operation. Does the voltage across CN14-2 and GND change from DC24V to DC0V when paper is taken up from the Duplex Unit?	YES	Check various parts for possible overload and, if they are okay, change CL3 or M2.
			NO	Change PWB-A.
Paper is at a stop near the Synchronizing Rollers.	1	Is PC2 fully operational? Check the input data using I/O Check.	YES	Check various parts for possible overload and, if they are okay, change PWB-A.
			NO	Check the PC2 actuator for operation and, if it is intact, change PC2.

4 MALFUNCTION

The copier CPU has a function that self-diagnoses the copier conditions. On detection of a malfunction, the corresponding code representing a particular malfunction name, location, and details as listed below is displayed on the Touch Panel together with a Tech. Rep. call message.

- Perform the following steps to reset the malfunction.

Malfunction Resetting Procedure

- Turn OFF, then ON the Power Switch or open and close the Side Cover for all malfunctions except fusing-related ones (C05✻✻).
- Use "Trouble Reset" of the "Initial" screen to reset all malfunctions including fusing-related ones (C05✻✻).

4-1. Detection Timing by Malfunction Code

Code	Description	Detection Timing
C0000	Main Motor M2 malfunction	The Lock signal remains HIGH for a continuous 1-sec. period or more while M2 remains energized.
C0010	I/C Motor M1 malfunction	The Lock signal remains HIGH for a continuous 1-sec. period or more while M1 remains energized.
C0045	Fusing Cooling Fan Motor M3 malfunction	The Lock signal remains HIGH or LOW for a continuous 1-sec. period or more while M3 remains energized.
C004C	Ozone Fan Motor M8 malfunction	The Lock signal remains HIGH or LOW for a continuous 1-sec. period or more while M8 remains energized.
C004E	Power Unit Cooling Fan Motor M4	The Lock signal (analog input voltage) remains 0.4V or less for a continuous 0.5-sec. period or more while M4 remains energized.
C0070	Main Hopper Toner Replenishing Motor M6 malfunction	• Toner Bottle Home Position Sensor PC10 remains blocked (L) for a continuous 2-sec. period or more while M6 remains energized. • PC10 remains unblocked (H) for a continuous 6-sec. period or more while M6 remains energized.
C0050	Warming-up failure	The temperature of the Fusing Rollers do not reach the required level even after the lapse of a given period of time during a warming-up cycle. • From room temperature to 100°C: Within 65 sec. • From 100°C to 140°C: Within 25 sec. • From 140°C to 170°C: Within 20 sec. • From 170°C to the completion of warming-up: Within 22 sec.
C0510	Abnormally low fusing temperature	• The fusing temperature remains 130°C or less for a continuous 0.1-sec. period or more during the standby state or printing. • The fusing temperature remains 80°C or less for a continuous 2-min. period or more during the low-temperature standby state.
C0520	Abnormally high fusing temperature	The fusing temperature remains 230°C or more for a continuous 0.1-sec. period or more.

Code	Description	Detection Timing
C0650	Faulty Scanner Home Position Sensor 1 PC12	<The Power Switch is turned ON, Original Cover lowered, or Start key pressed when the Scanner is at its home position> • PC12 is not unblocked (H) even when the Scanner moves 10 mm to the left. • PC12 is not blocked (L) even when the Scanner moves 4 mm to the right after PC12 has been unblocked (H). <The Power Switch is turned ON, Original Cover lowered, or Start key pressed when the Scanner is at any position other than home> • PC12 is not blocked (L) even when the Scanner moves 469.5 mm to the right.
C0651	Faulty Scanner Home Position Sensor 2 PC13	When the Start key is pressed with a document loaded in the Document Feed Tray of AF-7, PC13 is not blocked (L) even when the Scanner moves 463 mm to the left after PC12 has been unblocked (H).
C0990	LCC Lift-Up Motor EMOT malfunction (PF-106)	✻ See option service manual.
C0991	Lift 1 ascent motion failure (PF-106)	
C0995	LCC Transport Motor HMOT malfunction (PF-106)	
C0999	Lift 2 ascent motion failure (PF-106)	
C099D	Communications error (PF-106)	
C0B00	Transport Motor M1 drive malfunction (FN-100/FN-500)	
C0B0F	Paper Entrance Switching Motor M1 drive malfunction (FN-100/FN-500)	
C0B30	CD Aligning Motor M4 drive malfunction (FN-100/FN-500)	
C0B38	Shift Motor M5 drive malfunction (FN-100/FN-500)	
C0B4D	Paper Holding Tray Motor M10 drive malfunction (FN-100/FN-500)	
C0B4E	Finisher Tray Motor M8 drive malfunction (FN-100/FN-500)	
C0B50	Stapling Motor drive malfunction (FN-100/FN-500)	
C0BA0	Elevator Motor M9 drive malfunction (FN-100/FN-500)	
C0F32	Faulty ATDC Sensor E1	The value of data read by E1 is faulty. [E1 reading is 7% or less (3.92V or more) or 19% or more (1.41V or less).]

Code	Description	Detection Timing
C0F33	ATDC adjustment failure	• In an F8 (ATDC control voltage automatic adjustment) operation, the adjustment of ATDC control voltage is not completed within 1 min. after E1 sampling. • In an F8 operation, the control voltage falls outside the range of 5.39V to 8.15V.
C1038	Engine connection error	• The system fails in checking initial engine connection when Power Switch S1 is turned ON. • The system succeeded in checking initial connection when S1 was turned ON; then it fails in rechecking initial connection through the execution of a software reset when a communications error occurs during operation.
C1300	Polygon Motor M10 malfunction	<Resolution selection failure detection> • The Lock signal is not detected for a given period of time after the resolution has been selected. (The Lock signal is not, however, detected for 1 sec. after the start.) <Faulty Lock signal detection> • No Lock signals are detected for the 1-sec. period which starts 1 sec. after the first Lock. ✻ First Lock: The first Lock signal following 1 sec. after the selection of start or half speed. <Out-of-timing Lock detection> • The Lock signal is not detected for a continuous 0.5-sec. period while M10 is in the stabilized turning state (after a Lock has been detected). <Abnormal Lock detection> • The Lock signal remains ON for a continuous 5-sec. period while M10 remains deenergized.
C133A	Communications error (G/A)	———————————————
C133B	Communications error (option I/F)	———————————————
C13C0	I/C initialization failure	After failing to blow the imaging cartridge fuse 2 consecutive times, 3.6V or more is detected and the I/C is determined to be new.
C13D0	Faulty EEPROM	No initial data is written in EEPROM.
C13F0	HSYNC detection failure	• The SOS rising edge is not detected even after the lapse of 0.2 sec. after Polygon Motor M10 has started and laser output started. • No SOS rising edges are detected while VIA remains ON.

4-2. Troubleshooting Procedures by Malfunction Code

(1) C0000: M2 Malfunction
C0010: M1 Malfunction
C0045: M3 Malfunction
C004C: M8 Malfunction
C004E: M4 Malfunction
C0070: M6 Malfunction

Relevant Electrical Parts	
I/C Motor M1	Main Hopper Toner Replenishing Motor M6
Main Motor M2	Ozone Fan Motor M8
Fusing Cooling Fan Motor M3	Toner Bottle Home Position Sensor PC10
Power Unit Cooling Fan Motor M4	Master Board PWB-A

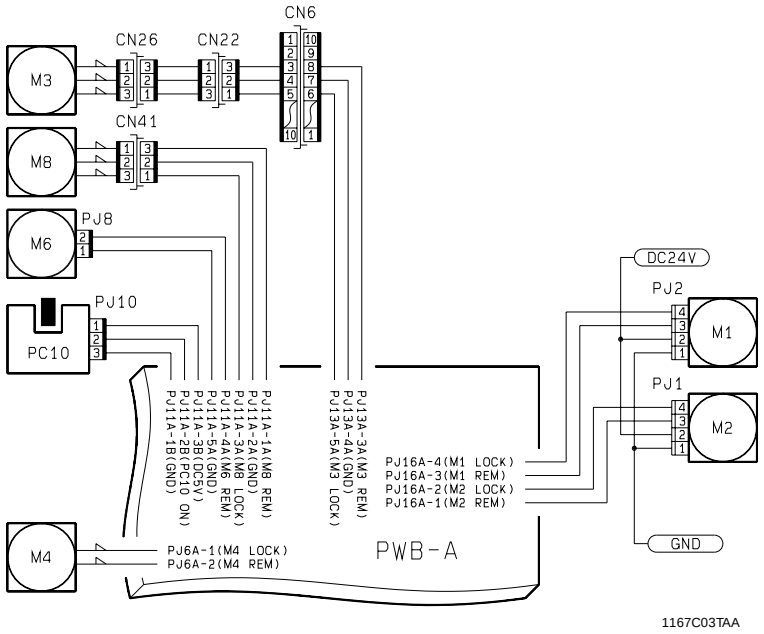

C0000

Step	Check Item	Result	Action
1	Does M2 turn after the malfunction has been reset?	NO	Check various parts for possible overload.
2	Check M2 for operation. Does the voltage across PJ1-3 of M2 and GND change from DC5V to DC0V after the malfunction has been reset?	NO	Change PWB-A.
3	Does the voltage across PJ1-4 of M2 and GND change from DC5V to DC0V after the malfunction has been reset?	YES	Change PWB-A.
		NO	Change M2.

C0010

Step	Check Item	Result	Action
1	Does M1 turn after the malfunction has been reset?	NO	Check various parts for possible overload.
2	Check M1 for operation. Does the voltage across PJ2-3 of M1 and GND change from DC5V to DC0V after the malfunction has been reset?	NO	Change PWB-A.
3	Does the voltage across PJ2-4 of M1 and GND change from DC5V to DC0V after the malfunction has been reset?	YES	Change PWB-A.
		NO	Change M14.

C0045

Step	Check Item	Result	Action
1	Does M3 turn after the malfunction has been reset?	NO	Check the connector and harness between M3 and PWB-A.
2	Check M3 for operation. Does the voltage across CN6-8 on the PWB-A side and GND change from DC0V to DC24V after the malfunction has been reset?	NO	Change PWB-A.
3	Does the “C0045” display persist even after M3 has been replaced with a new one?	YES	Change PWB-A.

C004C

Step	Check Item	Result	Action
1	Does M8 turn after the malfunction has been reset?	NO	Check various parts for possible overload.
2	Check M8 for operation. Does the voltage across CN41-3 on the PWB-A side and GND change from DC0V to DC24V after the malfunction has been reset?	NO	Change PWB-A.
3	Does the “C004C” display persist even after M8 has been replaced with a new one?	YES	Change PWB-A.

C004E

Step	Check Item	Result	Action
1	Does M4 turn after the malfunction has been reset?	YES	Change PWB-A.
2	Does the “C004E” display persist even after M4 has been replaced with a new one?	YES	Change PWB-A.

C0070

Step	Check Item	Result	Action
1	After the malfunction has been reset, remove the Rear Lower Cover and block Toner Bottle Cover Sensor PC11. Then, unlocking the Toner Bottle Lock Lever, turn the Toner Bottle a half turn by hand. Does the Toner Bottle turn when PC11 is unblocked (H) with the Toner Bottle Lock Lever kept unlocked?	YES	Perform step 3.
		NO	Check various parts for possible overload.
2	Does the voltage across PJ8-2 of M6 and GND change from DC0V to DC24V when step 1 is performed again?	YES	Change M6.
		NO	Change PWB-A.
3	Is PC10 fully operational? Check the input data using I/O Check. Does the input signal value for “Toner Bottle Set” change between “0” and “1” when the Toner Bottle is turned by hand?	YES	Change PWB-A.
		NO	Change PC10.

(2) C0500: Warming-up Failure
C0510: Abnormally Low Fusing Temperature
C0520: Abnormally High Fusing Temperature

Relevant Electrical Parts	
Fusing Roller Heater Lamp H1	Fusing Roller Heater Lamp Fuse TF1
Fusing Roller Thermistor TH1	Side Cover Interlock Switch 2 S3
Fusing Roller Thermostat TS1	Power Supply Unit 1 PU1
	Master Board PWB-A

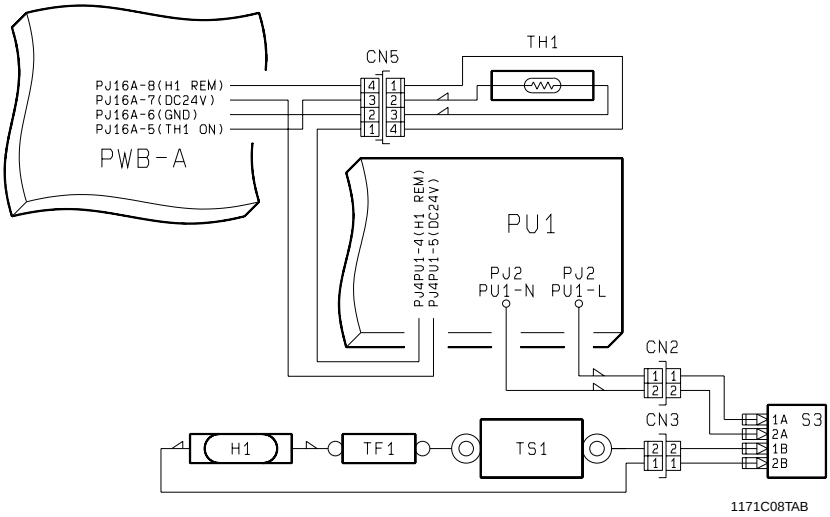

C0500, C0510

Step	Check Item	Result	Action
1	Does H1 turn ON after the malfunction is reset?	YES	Check TH1 for contamination or installation.
2	Is there continuity across CN3-1 and 2 on the Fusing Unit end with CN3 (2P) disconnected?	NO	Check H1, TS1, and TF1 for continuity.
3	Is there continuity across 1A and 1B, and across 2A and 2B, of S3 when S3 is turned ON?	NO	Change S3.
4	Is the resistance of TH1 (across CN5-2 and 3 on the Fusing Unit end) infinity?	YES	Change TH1.
5	Is Fuse F2 on PU1 conducting?	YES	Change PU1 or PWB-A.
		NO	Change the fuse.

C0520

Step	Check Item	Result	Action
1	Is TH1 installed properly?	NO	Install TH1 correctly.
2	Is TH1 dirty?	YES	Clean or change TH1.
3	Is the circuit across CN5-2 and 3 on the Fusing Unit end closed when CN5 (4P) is disconnected?	YES	Change TH1.
		NO	Change PWB-A or PU1.

(3) C0650: Faulty PC12
C0651: Faulty PC13

Relevant Electrical Parts	
Scanner Home Position Sensor 1 PC12	BCR Board BCR
Scanner Home Position Sensor 2 PC13	HGB Board HGB
Scanner Motor M5	MFB Board UN2
Master Board PWB-A	

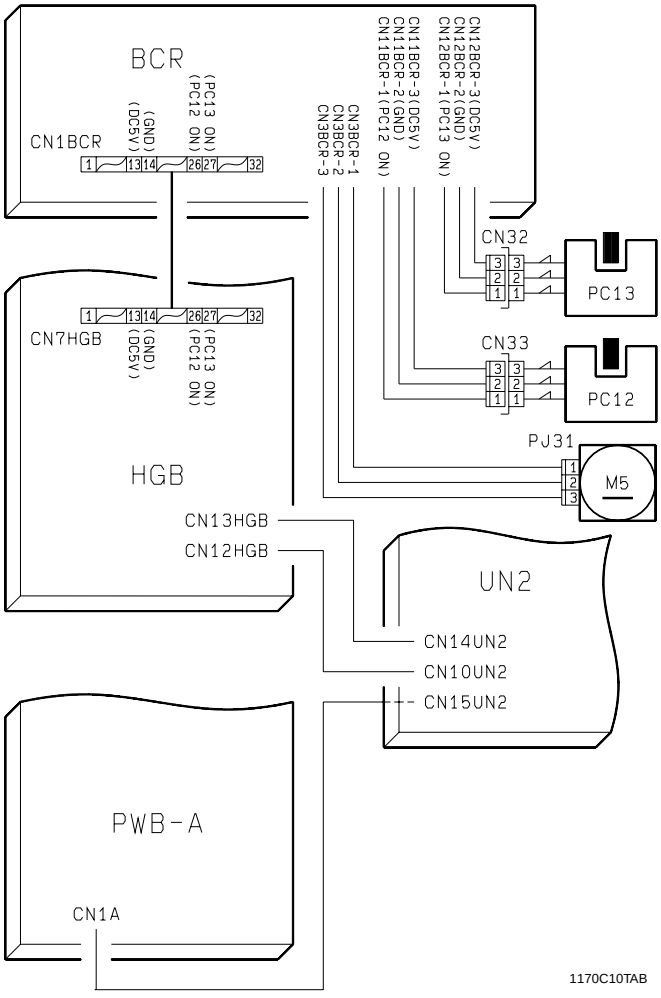

C0650, C0651

Step	Check Item	Result	Action
1	Is M5 energized? Select the following functions in this order: Tech. Rep. Mode → Movement Check → Scanner. Then, enter an appropriate value in “Absolute Position” or “Relative Position” and energize M5.	NO	Check various parts for possible overload and, if they are okay, change M5, BCR, HGB, UN2, or PWB-A, in that order.
2	Is “C0650” being displayed?	YES	Perform steps 3 and 4.
		NO	Perform steps 5 and 6.
3	Does the voltage across CN11BCR-1 on BCR and GND change from DC0V to DC5V when step 1 is performed a second time and PC12 is unblocked?	NO	Change PC12.
4	Does the voltage across CN1BCR-26 on BCR and GND change from DC0V to DC5V when step 3 is performed a second time?	YES	Change HGB, UN2, or PWB-A, in that order.
		NO	Change BCR.
5	Does the voltage across CN12BCR-1 on BCR and GND change from DC5V to DC0V when step 1 is performed a third time and PC13 is unblocked?	NO	Change PC13.
6	Does the voltage across CN1BCR-27 on BCR and GND change from DC0V to DC5V when step 5 is performed a second time?	YES	Change HGB, UN2, or PWB-A, in that order.
		NO	Change BCR.

(4) C0990: EMOT Malfunction
C0991: Lift 1 Ascent Motion Failure
C0995: HMOT Malfunction
C0999: Lift 2 Ascent Motion Failure
C099D: Communications Error

Relevant Electrical Parts	
LCC Lift-Up Motor EMOT	LCC Main Board PWB-A: PF-106
Lift-Up Sensor 1 LS1	Cassette Main Board PWB-A: PF-108/PF-110
Lift-Up Sensor 2 LS2	Cassette Main Board PWB-A
LCC Transport Motor HMOT	Master Board PWB-A

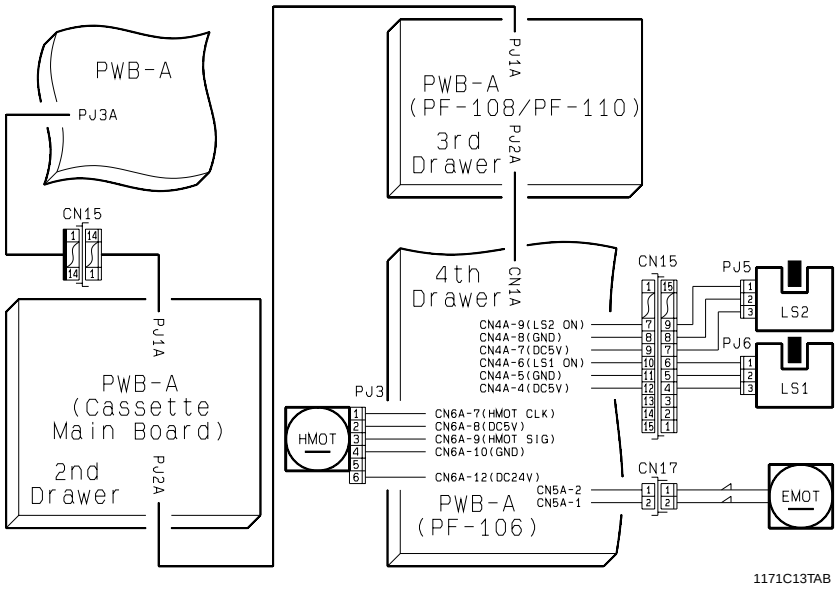

C0990

Step	Check Item	Result	Action
1	Does “C0990” reappear even after EMOT has been replaced with a new one?	YES	Change PWB-A (PF-106), PWB-A (PF-108/PF-110), PWB-A (Cassette Main Board), or PWB-A, in that order.

C0991

Step	Check Item	Result	Action
1	Is LS1 fully operational? Check the input data using I/O Check.	YES	Perform step 3 and onward.
2	Does the voltage across CN4A-6 on PWB-A (PF-106) and GND change to DC5V when LS1 is blocked and to DC0V when LS1 is unblocked?	YES	Change PWB-A (PF-106), PWB-A (PF-108/PF-110), or PWB-A (Cassette Main Board), in that order.
		NO	Change LS1.
3	Does EMOT turn when a drawer loaded with paper is slid into the copier?	YES	Check gears and couplings for proper engagement and, if they are okay, change PWB-A.
4	Does the voltage across CN5A-1 on PWB-A (PF-106) and GND change from DC0V to DC24V when step 3 is performed again?	YES	Check various parts for possible overload and, if they are okay, change EMOT.
		NO	Change PWB-A (PF-106), PWB-A (PF-108/PF-110), PWB-A (Cassette Main Board), or PWB-A, in that order.

C0995

Step	Check Item	Result	Action
1	Does “C0995” reappear even after HMOT has been replaced with a new one?	YES	Change PWB-A (PF-106), PWB-A (PF-108/PF-110), PWB-A (Cassette Main Board), or PWB-A, in that order.

C0999

Step	Check Item	Result	Action
1	Is LS2 fully operational? Check the input data using I/O Check.	YES	Perform step 3 and onward.
2	Does the voltage across CN4A-9 on PWB-A (PF-106) and GND change to DC5V when LS2 is blocked and to DC0V when LS2 is unblocked?	YES	Change PWB-A (PF-106), PWB-A (PF-108/PF-110), or PWB-A (Cassette Main Board), in that order.
		NO	Change LS2.
3	Does EMOT turn when a drawer loaded with paper is slid into the copier?	YES	Check gears and couplings for proper engagement and, if they are okay, change PWB-A.
4	Does the voltage across CN5A-1 on PWB-A (PF-106) and GND change from DC0V to DC24V when step 3 is performed again?	YES	Check various parts for possible overload and, if they are okay, change EMOT.
		NO	Change PWB-A (PF-106), PWB-A (PF-108/PF-110), PWB-A (Cassette Main Board), or PWB-A, in that order.

C099D

Step	Check Item	Result	Action
1	Does “C099D” reappear even after PWB-A (PF-106) has been replaced with a new one?	YES	Change PWB-A (PF-108/PF-110), PWB-A (Cassette Main Board), or PWB-A, in that order.

(5) C0F32: Faulty E1
C0F33: ATDC Adjustment Failure

Relevant Electrical Parts	
ATDC Sensor E1	Master Board PWB-A

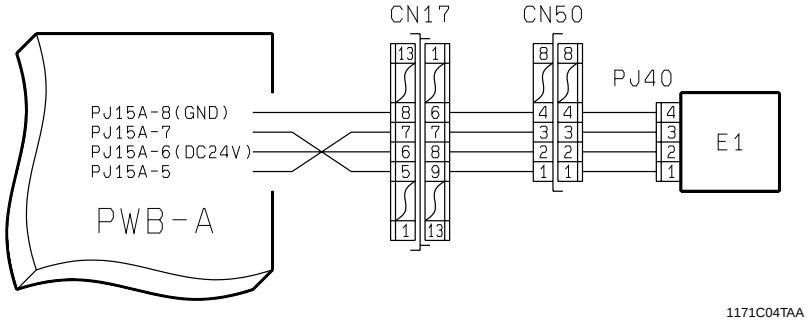

C0F32, C0F33

Step	Check Item	Result	Action
1	Are PJ40, CN50, CN17, and PWB-A PJ15A connected properly?	NO	Connect them properly.
2	Is the CN50 connection dirty?	YES	Clean.
3	Is “C0F32” or “C0F33” displayed even when an I/C with the same T/C as that of a new one has been installed?	NO	Change the I/C with a new one.
4	Is “C0F32” or “C0F33” displayed even when an I/C with the same T/C as that of a new one has been installed and an F8 operation run? (Be sure to record the ATDC control voltage setting value if an F8 operation is to be run.)	YES	Change PWB-A, install the old I/C, and return the ATDC control voltage setting to the value recorded. If “C0F32” or “C0F33” redisplayed, change the I/C with a new one.
		NO	Change the I/C with a new one.

(6) C10✻✻ to C13✻✻

- These malfunctions are concerned with faulty symptoms as they relate to software, hardware, and communications. For remedial actions, change the board, check for cable connections, and turn the Power Switch OFF and ON.

Code	Action
C1038	1. Check the connection between PWB-A and UN2, reset the malfunction, and turn OFF and ON the Power Switch. 2. If the same malfunction persists, change PWB-A or UN2.
C1300	1. Reset the malfunction and turn OFF and ON the Power Switch. 2. If the same malfunction persists, check the harnesses and PJs between PH Unit and PWB-A and, if they are intact, change PH Unit or PWB-A, in that order.
C133A	1. Reset the malfunction and turn OFF and ON the Power Switch. 2. If the same malfunction persists, check the connection between the copier PWB-A and A to E below: A. 2nd Drawer paper source unit B. 3rd Drawer paper source unit (PF-108/PF-110/PF-106) C. 4th Drawer paper source unit (PF-108/PF-110/PF-106) D. 5th Drawer paper source unit (PF-108/PF-110) E. Job Tray (JS-200) or shift Tray (OT-100) 3. If the connection is made properly, unplug the connector between the copier and A to E and turn OFF and ON the Power Switch. →If the malfunction code display persists, change the copier PWB-A. →If the malfunction is no longer detected, connect the connectors sequentially and turn OFF and ON the Power Switch. When “C133A” is detected, check the connector of the corresponding paper source unit and, if it is intact, change the PWB-A of the unit.
C133B	1. Reset the malfunction and turn OFF and ON the Power Switch. 2. If the same malfunction persists, check the connection between the copier PWB-A and Finisher PWB-A. 3. If the connection is made properly, unplug the connector between the copier and Finisher and turn OFF and ON the Power Switch. →If the malfunction code display persists, change the copier PWB-A. →If the malfunction is no longer detected, check the connector and, if it is intact, change the Finisher PWB-A.
C13C0	1. Reset the malfunction, turn OFF and ON the Power Switch, and reinstall the I/C. 2. If the malfunction is detected again, check the terminal block for the I/C fuse and HV1 and, if it is intact, change HV1 or PWB-A.
C13D0	1. Reset the malfunction, turn OFF and ON the Power Switch, and unplug the power cord and plug it back in. 2. If the malfunction is detected again, check the connection between IC3 on PWB-A and the EEPROM and, if it is good, change PWB-A. 3. If the malfunction is still detected, change the EEPROM. ✻ For the precautions to be observed when replacing the EEPROM, see DIS/REASSEMBLY, ADJUSTMENT.
C13F0	1. Reset the malfunction and turn OFF and ON the Power Switch. 2. If the same malfunction persists, check the harnesses and PJs between PH Unit and PWB-A and, if they are intact, change PH Unit or PWB-A, in that order.

(7) The Copier Does not Turn ON.

Relevant Electrical Parts	
Power Switch S1	Master Board PWB-A
Side Cover Interlock Switch 1 S2	Control Panel UN1
Power Supply Unit 1 PU1	MFB Board UN2
Power Supply Unit 2 PU2	

Symptom	Step	Check Item	Result	Action
Power does not turn ON.	1	Is there an AC power supply voltage across PJ1PU1-1 and 3 on PU1 when S1 is turned ON?	NO	Check S1, PU1 fuse, and power supply voltage.
	2	Is the voltage across PJ5PU1-10 and GND DC5V when S1 is turned ON?	YES	Check the fuse on PWB-A.
			NO	Change PU1.
	3	Is the voltage across PJ5PU1-4 and GND DC24V when S1 is turned ON?	NO	Change PU1.
	4	Is the voltage across PJ5PU1-3 and GND DC24V when S1 is turned ON?	NO	Change PU1.
	5	Does the voltage across the S2 connector (yellow) and GND change from DC0V to DC24V when S2 is turned ON?	NO	Check S2.
	6	Is the voltage across PJ7PU1-9 on PU1 and GND DC3.3V?	NO	Change PU1.
	7	Is the voltage across CN1PU2-1 on PU2 and GND DC24V?	NO	Change PU1.
	8	Is the voltage across CN28UN2-8 on UN2 and GND DC-12V?	NO	Change PU2.
	9	Is the voltage across CN28UN2-7 on UN2 and GND DC12V?	YES	Change PWB-A.
			NO	Change PU2.
The control panel indicates nothing.	1	Is DC24V being output from UN2 to UN1? Disconnect CN1UN1 of UN1 and check to see if the voltage across CN1UN1-1 on the harness side and GND is DC24V.	NO	Change UN2.
	2	Is DC5V being output from UN2 to UN1? Disconnect CN1UN1 of UN1 and check to see if the voltage across CN1UN1-28 on the harness side and GND, and across CN1UN1-29 and GND, is DC5V.	YES	Change UN1.
			NO	Change UN2.

5 IMAGE FAILURE

5-1. Image Failure Troubleshooting

Image failures have many possible causes. For troubleshooting, it is necessary to determine whether a failure is attributable to:
1. A basic cause or any other cause
2. The input system (IR) or output system (engine).

In this chapter, troubleshooting is divided into “initial checks” and “troubleshooting procedures classified by image failures.” If an image failure has occurred, first make the initial checks, then proceed to the corresponding image failure troubleshooting procedure.

5-2. Initial Checks

1. Place of installation
- Is the source voltage normal? Does the voltage vary greatly?
- Is the copier installed in a hot, humid place where temperature varies sharply?
- Is the copier installed in a dusty place?
- Is the copier subjected to direct sunlight?
- Is the copier level?

2. Copy paper
- Is the recommended paper used?
- Is the paper damp?
- Does the paper size set in the paper source match the size of the paper loaded in it?

3. Original
- Is the original written in light pencil?
  → Use the test chart to check the image.
- Is the original transparent, or are transparencies being used?
  → Place a blank sheet of paper over the original and make a copy.
- Is the Original Glass dirty or scratched?
  → Clean a dirty glass, or replace a scratched one.

4. Adjust data and Level History data
- Do the values set for “Adjust” and “Level History” fall within the specified range?

5. PM parts (supplies)
- Have the PM parts (supplies), such as the PC Drum, Cleaning Blade, and other parts that affect image quality, reached the end of their cleaning or replacement cycle?
- Are two or more imaging cartridges being used alternately?

6. Adjustment items (registration, focus, etc.)
- Among the adjustment items given in DIS/REASSEMBLY, ADJUSTMENT, is there any adjustment that may remedy the image failure?

7. Input system (IR) or output system (engine)?
- Run “F12” which can be selected as follows: Tech. Rep. Mode → Function.
- If the test pattern output has the same problem as the copy image:
  → Check the output system.
- If the test pattern output is normal:
  → Check the input system.
- Make a copy at a different zoom ratio.

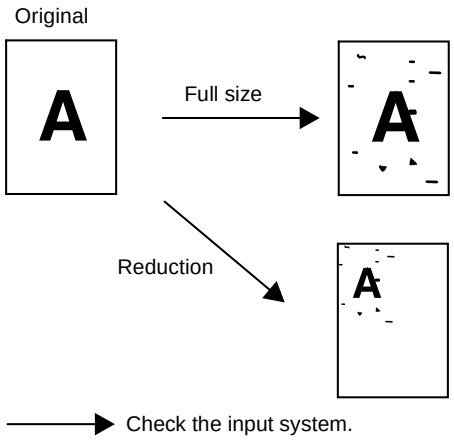

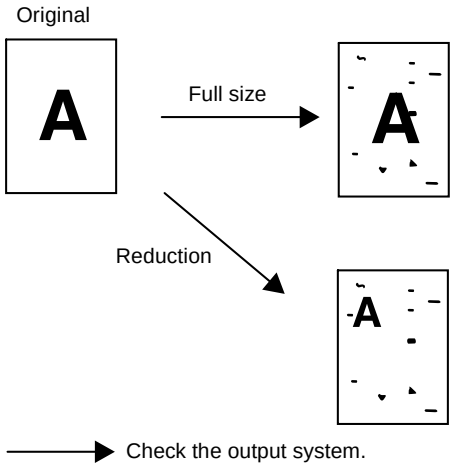

1167T020AB

5-3. Troubleshooting Procedures by Image Failure

<Image Failure Samples>

1. Blank copy

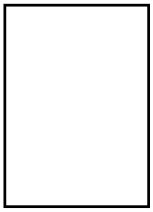

2. Black copy

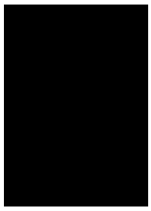

3. Low image density

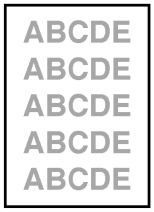

4. Foggy background

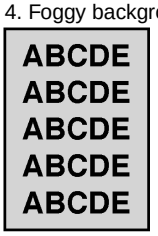

5. Black streaks or bands

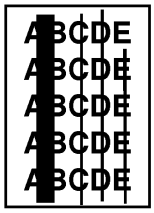

6. Black spots

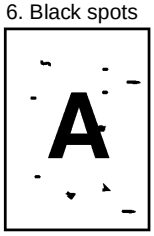

7. Blank streaks or bands

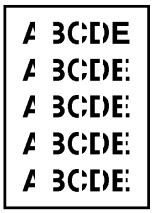

8. Void areas

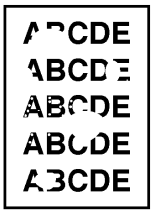

9. Smear on back

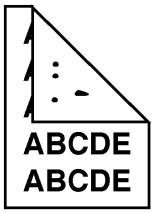

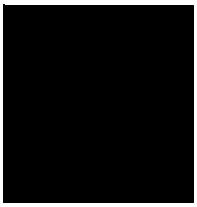

10. Uneven image density

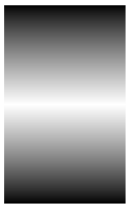

11. Gradation reproduction failure

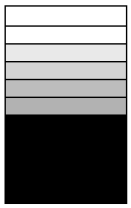

12. Rough image



13. Periodically uneven image



1167T017AA

(1) Blank Copy

Section	Step	Check Item	Result	Action
Engine	1	Is toner empty?	YES	Check Sub Hopper Toner Empty Switch S4 and change the Toner Bottle.
	2	Is the drive transmission mechanism to the Developing Unit in good condition?	NO	Check and change as necessary.
	3	Is the image transfer current terminal intact?	NO	Check and change as necessary.
	4	Does the laser shutter (the one located on the laser beam path between the PH Unit and PC Drum) open and close properly?	NO	Adjust so that the shutter opens and closes properly.
	5	Does the I/C Shutter open and close properly?	YES	Change HV1, PH Unit, or PWB-A, in that order.
			NO	Adjust so that the shutter opens and closes properly.
IR	1	Is the Scanner drive transmission mechanism in good condition?	NO	Check and change as necessary.
	2	Do the connections from CCD to HGB remain intact?	NO	Reconnect.
	3	Do the connections from HGB to UN2 remain intact?	YES	Change CCD, HGB, or UN2, in that order.
			NO	Reconnect.

(2) Black Copy

Section	Step	Check Item	Result	Action
Engine	1	Is the PC Drum charge voltage terminal in good condition?	NO	Check and change as necessary.
	2	Is the grid voltage terminal in good condition?	NO	Check and change as necessary.
	3	Is the developing bias terminal in good condition?	NO	Check and change as necessary.
	4	Does a black copy persist even after the I/C has been replaced with a new one?	YES	Change HV1 or PWB-A.
IR	1	Does the Exposure Lamp turn ON when "ON" is selected for "Lighting Exposure Lamp"? "Lighting Exposure Lamp" can be selected as follows: Tech. Rep. Mode → Movement Check → Scanner.	YES	Perform steps 4 and onward.
			NO	Check connectors and harnesses and perform steps 2 and 3.
	2	Does the voltage across CN13BCR-1 on BCR and GND change from DC24V to DC0V when step 1 is performed again?	NO	Change BCR, HGB, or UN2, in that order.
	3	Is an AC voltage output from INV to Exposure Lamp when step 1 is performed again?	YES	Change LA2.
			NO	Change INV.
	4	Are the mirrors and lens installed properly?	NO	Install them properly.
	5	Are the mirrors and lens dirty?	YES	Clean or change.

(3) Low Image Density

Section	Step	Check Item	Result	Action
Engine	1	Does the image get better when a copy is made with new paper loaded?	YES	Change the paper. Instruct the user on the storage of paper.
	2	Is toner empty?	YES	Check Sub Hopper Toner Empty Switch S4 and change the Toner Bottle.
	3	Is the image transfer current terminal intact?	NO	Check and change as necessary.
	4	Is the developing bias terminal intact?	NO	Check and change as necessary.
	5	Does the image density remain low even after the I/C has been replaced with a new one?	NO	This completes the procedure.
	6	Does the image density become higher when the “Image Density” value is changed toward the plus side? “Image Density” can be selected as follows: Tech. Rep. Mode → Tech. Rep. Choice → Printer.	YES	This completes the procedure.
	7	Does the image density become higher when the “VG Adjust” value is changed toward the plus side? “VG Adjust” can be selected as follows: Tech. Rep. Mode → Tech. Rep. Choice → Printer.	YES	This completes the procedure.
			NO	Change HV1, HGB, or UN2, in that order.
IR	1	Do the connections from CCD to HGB remain intact?	NO	Reconnect.
	2	Do the connections from HGB to UN2 remain intact?	YES	Change CCD, HGB, or UN2, in that order.
			NO	Reconnect.

(4) Foggy Background

Section	Step	Check Item	Result	Action
___	1	Is sunlight or any other extraneous light entering the copier?	YES	Protect the copier from extraneous light.
Engine	1	Is the PC Drum dirty with foreign matter?	YES	Clean the PC Drum.
	2	Is the PC Drum charge voltage terminal in good condition?	NO	Check and change as necessary.
	3	Is the grid voltage terminal in good condition?	NO	Check and change as necessary.
	4	Is the developing bias terminal in good condition?	NO	Check and change as necessary.
	5	Is the Charge Neutralizing Sheet voltage terminal in good condition?	NO	Check and change as necessary.
	6	Is Eraser Lamp LA1 dirty?	YES	Clean.
	7	Does foggy background persist even after the I/C has been replaced with a new one?	NO	This completes the procedure.
	8	Does foggy background persist when the “Image Density” value is changed toward the minus side? “Image Density” can be selected as follows: Tech. Rep. Mode → Tech. Rep. Choice → Printer.	NO	This completes the procedure.
	9	Does foggy background persist when the “VG Adjust” value is changed toward the minus side? “VG Adjust” can be selected as follows: Tech. Rep. Mode → Tech. Rep. Choice → Printer.	YES	Change HV1, PH Unit, or PWB-A, in that order.
			NO	This completes the procedure.
IR	1	Are the mirrors and lens dirty?	YES	Clean or change.
	2	Is the Exposure Lamp dirty or deteriorated?	YES	Clean or change.
	3	Do the connections between the Exposure Lamp and INV remain intact?	NO	Reconnect.
	4	Do the connections from INV to BCR remain intact?	NO	Reconnect.
	5	Do the connections from BCR to HGB remain intact?	NO	Reconnect.
	6	Do the connections from HGB to UN2 remain intact?	YES	Change INV, BCR, HGB, or UN2, in that order.
			NO	Reconnect.

(5) Black Streaks or Bands

Section	Step	Check Item	Result	Action
Engine	1	Is the PC Drum dirty?	YES	Clean the PC Drum.
	2	Has toner spilled from the I/C inside of the copier?	YES	Clean the interior and change I/C.
	3	Is the PC Drum charge voltage terminal in good condition?	NO	Check and change as necessary.
	4	Is the grid voltage terminal in good condition?	NO	Check and change as necessary.
	5	Are the Fusing Rollers dirty with foreign matter?	YES	Clean or change the Fusing Rollers.
			NO	Change I/C.
IR	1	Are the mirrors, lens, and Original Glass dirty with foreign matter?	YES	Clean the mirrors, lens, and Original Glass.
	2	Do the connections from CCD to HGB remain intact?	NO	Reconnect.
	3	Do the connections from HGB to UN2 remain intact?	YES	Change CCD, HGB, or UN2, in that order.
			NO	Reconnect.

(6) Black Spots

Section	Step	Check Item	Result	Action
Engine	1	Is the PC Drum dirty?	YES	Clean the PC Drum.
	2	Has toner spilled from the I/C inside of the copier?	YES	Clean the interior and change I/C.
	3	Is the PC Drum charge voltage terminal in good condition?	NO	Check and change as necessary.
	4	Is the grid voltage terminal in good condition?	NO	Check and change as necessary.
	5	Are the Fusing Rollers dirty with foreign matter?	YES	Clean or change the Fusing Rollers.
			NO	Change I/C.
IR	1	Are the mirrors, lens, and Original Glass dirty with foreign matter?	YES	Clean the mirrors, lens, and Original Glass.
	2	Do the connections from CCD to HGB remain intact?	NO	Reconnect.
	3	Do the connections from HGB to UN2 remain intact?	YES	Change CCD, HGB, or UN2, in that order.
			NO	Reconnect.

(7) Blank Streaks or Bands

Section	Step	Check Item	Result	Action
Engine	1	Is the PC Drum dirty with foreign matter?	YES	Clean the PC Drum.
	2	Is the image transfer current terminal intact?	YES	Check and change as necessary.
	3	Is the Image Transfer Roller dented or scratched?	YES	Change the Image Transfer Roller.
	4	Are the Fusing Rollers scratched or dirty?	YES	Clean or change the Fusing Rollers.
	5	Is the PH Unit window glass dirty?	YES	Clean the window glass.
	6	Is the light path between PH and PC dirty with dust?	YES	Remove dust.
			NO	Change the I/C.
IR	1	Is the Shading Sheet on the Original Glass dirty?	YES	Clean or change.
	2	Do the connections from CCD to HGB remain intact?	NO	Reconnect.
	3	Do the connections from HGB to UN2 remain intact?	YES	Change CCD, HGB, or UN2, in that order.
			NO	Reconnect.

(8) Void Areas

Section	Step	Check Item	Result	Action
Engine	1	Does the image get better when a copy is made with new paper loaded?	YES	Change the paper. Instruct the user on the storage of paper.
	2	Is the Image Transfer Roller installed correctly?	NO	Install correctly.
	3	Is the Image Transfer Roller dented or scratched?	YES	Change the Image Transfer Roller.
	4	Is the image transfer current terminal intact?	NO	Check and change as necessary.
	5	Are the Fusing Rollers scratched or deformed?	YES	Change the Fusing Rollers.
			NO	Change the I/C.
IR	1	Is the Original Glass dirty?	YES	Clean or change.
	2	Do the connections from CCD to HGB remain intact?	NO	Reconnect.
	3	Do the connections from HGB to UN2 remain intact?	YES	Change CCD, HGB, or UN2, in that order.
			NO	Reconnect.

(9) Smear on Back

Section	Step	Check Item	Result	Action
Engine	1	Is the Image Transfer Roller dirty?	YES	Clean or change.
	2	Has toner spilled from the I/C inside of the copier?	YES	Clean the interior and change I/C.
	3	Are the Fusing Rollers dirty?	YES	Clean or change the Fusing Rollers.

(10) Uneven Image Density

Section	Step	Check Item	Result	Action
Engine	1	Is the Image Transfer Roller dirty or deteriorated?	YES	Clean or change the Image Transfer Roller.
	2	Does the image get better when a copy is made with new paper loaded?	YES	Change the paper. Instruct the user on the storage of paper.
			NO	Change the I/C or PWB-A.
IR	1	Are the Original Glass, mirrors, and lens dirty with foreign matter?	YES	Clean the Original Glass, mirrors, and lens.
	2	Is the Shading Sheet on the Original Glass dirty?	YES	Clean or change.
	3	Is the Exposure Lamp dirty or deteriorated?	YES	Clean or change.
	4	Do the connections from CCD to HGB remain intact?	NO	Reconnect.
	5	Do the connections from HGB to UN2 remain intact?	YES	Change CCD, HGB, or UN2, in that order.
			NO	Reconnect.

(11) Gradation Reproduction Failure

Section	Step	Check Item	Result	Action
Engine	1	Does the image get better when a copy is made with new paper loaded?	YES	Change the paper. Instruct the user on the storage of paper.
			NO	Change PWB-A.
IR	1	Is the Shading Sheet dirty?	YES	Clean or change.
	2	Is the Original Glass dirty?	YES	Clean or change.
	3	Do the connections from CCD to HGB remain intact?	NO	Reconnect.
	4	Do the connections from HGB to UN2 remain intact?	YES	Change CCD, HGB, or UN2, in that order.
			NO	Reconnect.

(12) Rough Image

Section	Step	Check Item	Result	Action
Engine	1	Is the Image Transfer Roller dirty?	YES	Clean or change.
	2	Is the image transfer current terminal intact?	YES	Change HV1, I/C, PH Unit, or PWB-A, in that order.
			NO	Check and change as necessary.
IR	1	Do the connections from CCD to HGB remain intact?	NO	Reconnect.
	2	Do the connections from HGB to UN2 remain intact?	YES	Change CCD, HGB, or UN2, in that order.
			NO	Reconnect.

(13) Periodically Uneven Image

Section	Step	Check Item	Result	Action
Engine	1	Is the Developing Unit drive gear cracked or dirty with foreign matter?	YES	Clean or change.
	2	Is the PC Drum drive gear cracked or dirty with foreign matter?	YES	Clean or change.
	3	Is the Synchronizing Roller drive gear cracked or dirty with foreign matter?	YES	Clean or change.
	4	Is the Fusing Unit drive gear cracked or dirty with foreign matter?	YES	Clean or change.
	5	Is the PH Assy secured properly?	YES	Change the I/C or PWB-A.
			NO	Secure properly.
IR	1	Is the Scanner Motor drive gear cracked or dirty with foreign matter?	YES	Clean or change.
	2	Is the Scanner Motor secured properly?	NO	Secure properly.
	3	Is the Scanner secured properly?	NO	Secure properly.
	4	Are the Scanner Drive Cables wound properly?	NO	Wind the cables properly.
	5	Are the Scanner rails damaged or dirty with foreign matter?	YES	Clean or change.
	6	Do the connections from CCD to HGB remain intact?	NO	Reconnect.
	7	Do the connections from HGB to UN2 remain intact?	YES	Change CCD, HGB, or UN2, in that order.
			NO	Reconnect.