MINOLTA

Parts Catalog

The essentials of imaging

Di3510/Di3510f

4030

PREFACE

1. The part numbers listed in Parts Catalog are those which were assigned to the parts making up the machine at the time machine was originally introduced onto the market.

2. Parts whose INDEX numbers are shown white against a black background in the illustration are those to be used in only certain market areas. These part numbers are given in the lower half part of the list section. Check the SFIX No. listed in SFIX CHART on page II to find which part number is applicable to your own area.

3. Parts whose INDEX numbers are shown black against a white background in the illustration are those to be used in all market areas. These parts are listed on the upper half part of the list section.

4. If "NS" follows a part number given in the list section, it indicates that we do not keep a stock of the part. The part is not required for ordinary service jobs, either.

5. If "RP" is shown in the REC column of the list section, it indicates that the part is functionally important.

6. In the exploded views in this Parts Catalog the parts (Screws & Washes, etc...) which are indicated with a "four-digit" numbers are listed in numerical order in the section "SCREWS AND WASHERS". Please check these "four-digit" numbers with the part numbers ("ten-digit" numbers) which should be used for ordering the part.

7. All part numbers consist of "ten-digit" which should all be quoted when ordering a part. The price of parts can be obtained by referring to the "Parts Price List" which is separately issued.

8. All infomation contained in this Parts Catalog is subject to change.

SFIX CHART

SFIX No.	COUNTRY	VOLTAGE	FREQUENCY (Hz)	PAPER SIZE	SFIX No.	COUNTRY	VOLTAGE	FREQUENCY (Hz)	PAPER SIZE
001	JAPAN FAX	100V	50/60	METRIC	301	USA/CANADA L AMER-ICA FAX	120-127V	60	INCH
011	JAPAN COPIER	100V	50/60	METRIC	303	TAIWAN FAX	110V	60	METRIC
201	EUROPE FAX	220-240V	50/60	METRIC	304	S ARABIA/BRAZIL FAX	120-127V	60	METRIC
202	THIRD AREA FAX	220-240V	50/60	METRIC	307	FEDERAL GOVERNMENT	120-127V	60	INCH
211	EUROPE COPIER	220-240V	50/60	METRIC	311	USA/CANADA L AMER-ICA COPIER	120-127V	60	INCH
212	THIRD AREA COPIER	220-240V	50/60	METRIC	313	TAIWAN COPIER	110V	60	METRIC
214	PHILIPPINE	220-240V	50/60	INCH	314	S ARABIA/BRAZIL COPIER	120-127V	60	METRIC
216	CHINA	220-240V	50/60	METRIC					

CONTENTS

1. HOUSING (A) • • • • • 1
2. HOUSING (B) • • • • • 3
3. CONTROL PANEL • • • • • 5
4. OPTICAL FRAMES • • • • • 7
5. BOOK SCANNER • • • • • 9
6. FRAMES (A) • • • • • 11
7. FRAMES (B) • • • • • 13
8. FRAMES (C) • • • • • 15
9. UPPER PAPER TAKE-UP SECTION • • • • • 17
10. LOWER PAPER TAKE-UP SECTION (A) • • • • • 19
11. LOWER PAPER TAKE-UP SECTION (B) • • • • • 21
12. MANUAL FEED SECTION (A) • • • • • 23
13. MANUAL FEED SECTION (B) • • • • • 25
14. HOPPER SECTION • • • • • 27
15. IMAGING UNIT • • • • • 29
16. PAPER TRANSPORT SECTION • • • • • 31
17. TRANSFER SECTION • • • • • 33
18. DRIVE SECTION (A) • • • • • 35
19. DRIVE SECTION (B) • • • • • 37
20. FUSING SECTION (A) • • • • • 39
21. FUSING SECTION (B) • • • • • 41
22. ELECTRICAL COMPONENTS • • • • • 43
23. PAPER TRAY UNIT • • • • • 45
24. WIRING ACCESSORIES AND JIGS • • • • • 47
25. SCREWS AND WASHERS • • • • • 49
26. NUMERICAL INDEX • • • • • 50

JULY 2003

1 HOUSING (A)

Di3510/Di3510f

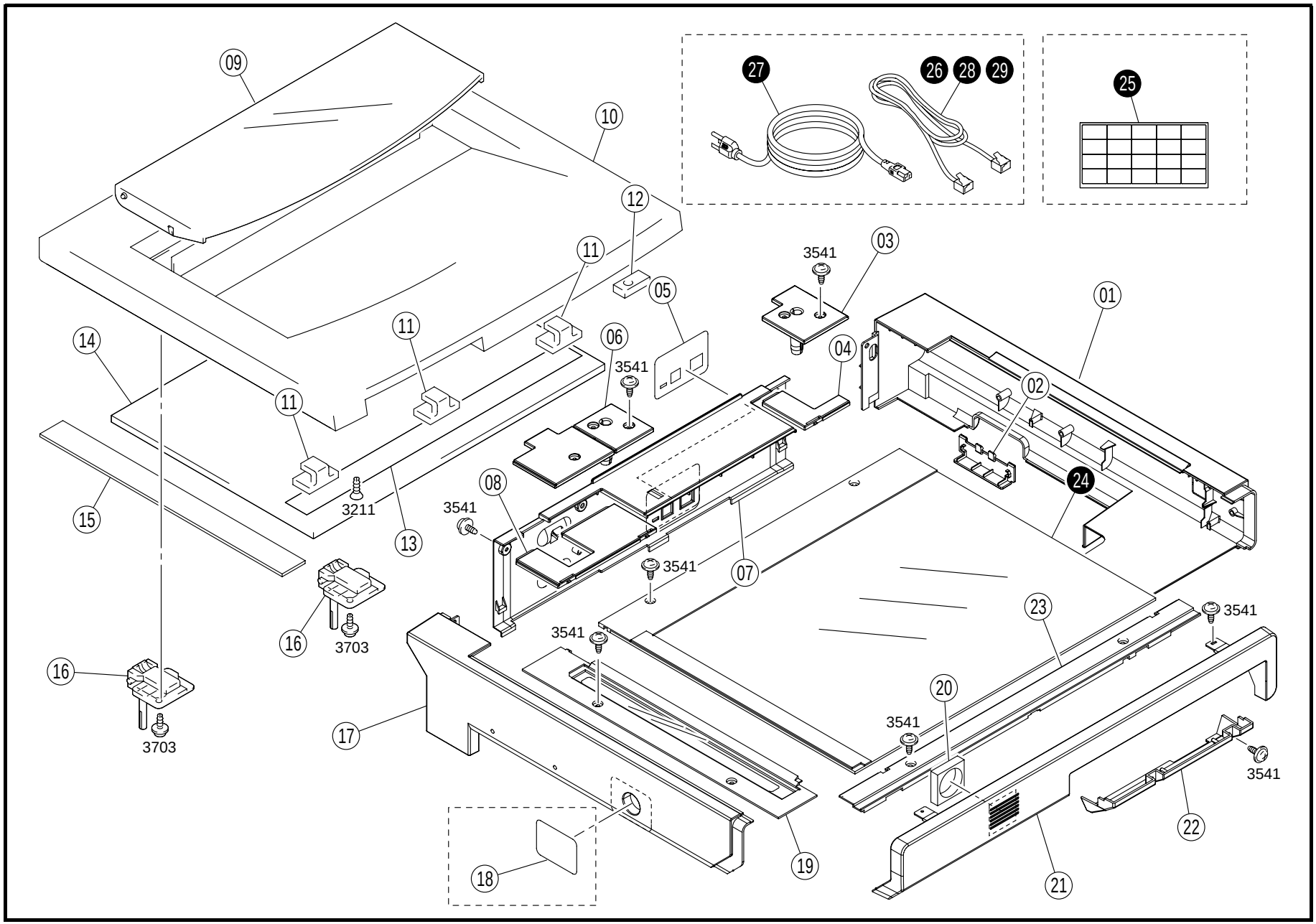

INDEX	PART NO.	PART NAME	REC	QTY
01	4030-1505-03	COVER		1
02	4030-1508-02	COVER		1
03	4030-1510-01	COVER		1
04	4030-1507-01	COVER		1
05	4030-7328-02	LABEL		1
06	4030-1509-01	COVER		1
07	4030-1504-02	COVER		1
08	4030-1506-01	COVER		1
09	1171-1126-01	ORIGINAL HOLDER		1
10	1171-1125-02	COVER		1
11	1139-1703-02	SLIDER		3
12	9326-2300-11	MAGNET		1
13	1139-1706-01	SEAL		1
14	1139-1704-14	PAD		1
15	4030-1511-01	COVER		1
16	1139-1705-01	HINGE		2
17	4030-1503-02	COVER		1
18	4030-7329-01	LABEL		1
19	4384-1008-01	ORIGINAL GLASS		1
20	4030-1515-01	SEAL		1
21	4030-1501-02	COVER		1
22	4030-1502-01	COVER		1
23	4384-1049-01	COVER		1

INDEX	PART NO.	PART NAME	REC	QTY	SFIX
24	4384-1009-01	ORIGINAL GLASS		1	001, 011
24	4384-1010-01	ORIGINAL GLASS		1	214, 301, 307, 311
24	4384-1011-01	ORIGINAL GLASS		1	201, 202, 211, 212, 216, 303, 304, 313, 314
25	4030-7310-01	LABEL		1	001, 011, 201, 202, 211, 212, 216, 303, 304, 313, 314
25	4030-7312-01	LABEL		1	214, 301, 307, 311
26	4628-6801-01	WIRE HARNESS ASSY		1	001, 202, 301, 303, 304, 307
27	9381-4101-22	POWER CORD		1	001, 011
27	9381-4101-31	POWER CORD		1	301, 303, 307, 311, 313
27	9381-4810-61	POWER CORD		1	202, 212, 214
27	9381-4910-22	POWER CORD		1	216
28	4628-6802-01	WIRE HARNESS ASSY		1	202
29	4628-6803-01	WIRE HARNESS ASSY		1	202

2 HOUSING (B) Di3510/Di3510f

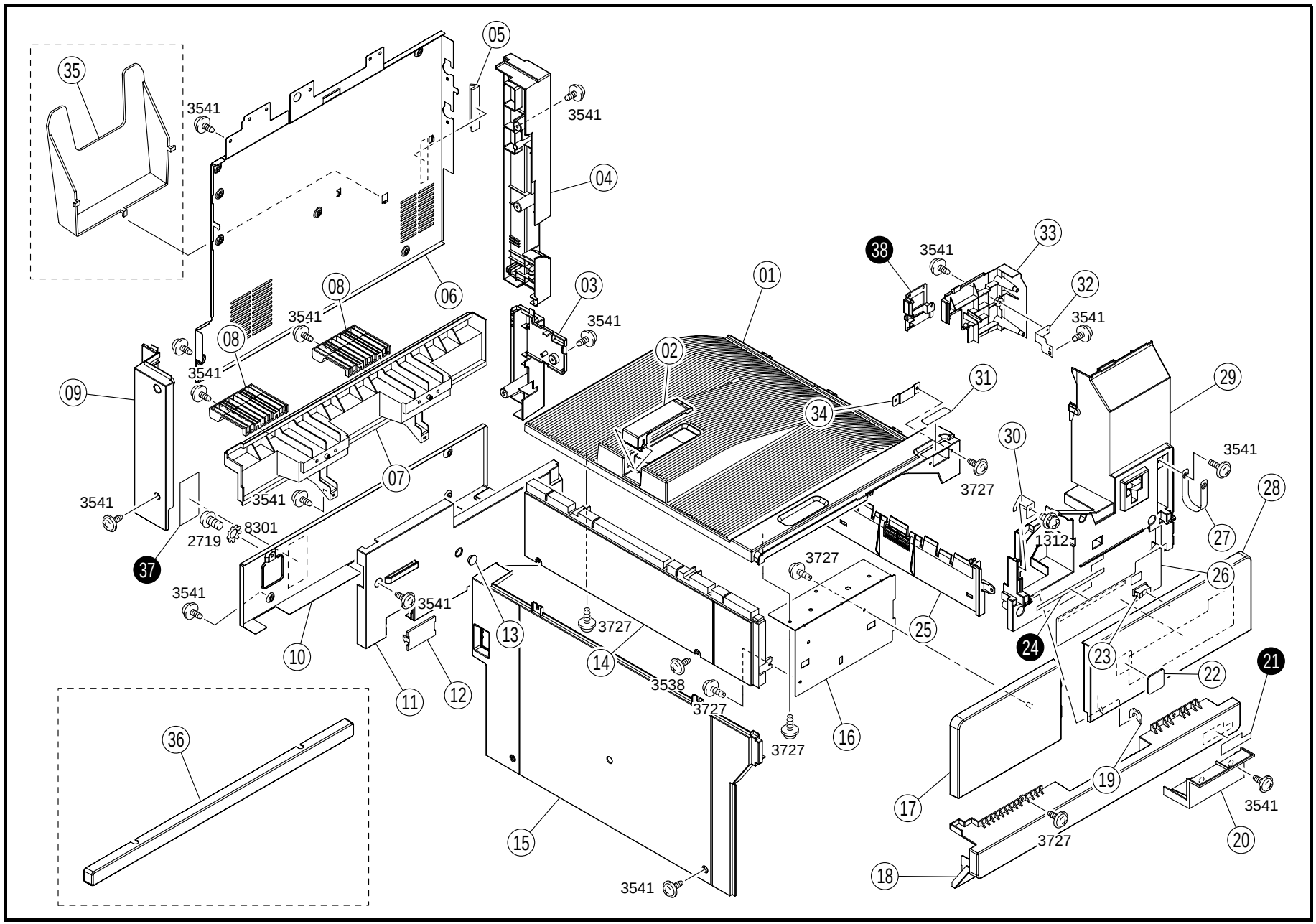

INDEX	PART NO.		PART NAME	REC	QTY
01	4030-1020-03		TRAY		1
02	4030-1027-02		REGULATING PLATE		1
03	4030-1015-04		RIGHT COVER		1
04	4030-1014-03		RIGHT COVER		1
05	9384-4300-11		ELECTRICALLY CONDUCTIVE		1
06	4030-1009-03		REAR COVER		1
07	4030-1010-01		REAR COVER		1
08	4030-1013-01		HANDLE		2
09	4030-1006-03		LEFT COVER		1
10	4030-1011-02		REAR COVER		1
11	4030-1012-03		REAR COVER		1
12	4030-1030-02		COVER		1
13	4030-1041-01		CAP		1
14	4030-1022-01		TRAY		1
15	4030-1007-03		LEFT COVER		1
16	4030-1023-02	NS	TRAY		1
17	4030-1003-03		FRONT COVER		1
18	4030-1002-02		FRONT COVER		1

INDEX	PART NO.		PART NAME	REC	QTY
19	1033-4402-01		STOPPER RING		1
20	4030-1005-02		COVER		1
22	4028-7400-01		LABEL		1
23	4030-1040-02		CATCH		1
25	4030-1018-03		COVER		1
26	4030-7313-01		LABEL		1
27	4120-1014-02		BAND		1
28	4030-1001-03		FRONT COVER		1
29	4030-1004-04		COVER		1
30	4030-5397-01	NS	STOPPER		1
31	4030-7314-02		LABEL		1
32	4030-2311-01	NS	BRACKET		1
33	4030-1016-03		COVER		1
34	4030-1025-02	NS	BRACKET		1
35	1156-7501-01		HOLDER		1
36	4030-1034-02		COVER		1

INDEX	PART NO.	PART NAME	REC	QTY	SFIX
21	4030-7318-01	LABEL		1	011, 211, 212, 214, 216, 313, 314
21	4030-7319-01	LABEL		1	001, 201, 202, 303, 304
21	4030-7327-01	LABEL		1	301, 307, 311
24	4030-7311-01	LABEL		1	001, 011
24	4030-7330-01	LABEL		1	202, 212, 214, 216, 301, 303, 304, 307, 311, 313, 314
24	4030-7331-01	LABEL		1	201, 211
37	4021-7337-01	LABEL		1	201, 211
38	4030-1017-02	COVER		1	011

3 CONTROL PANEL Di3510/Di3510f

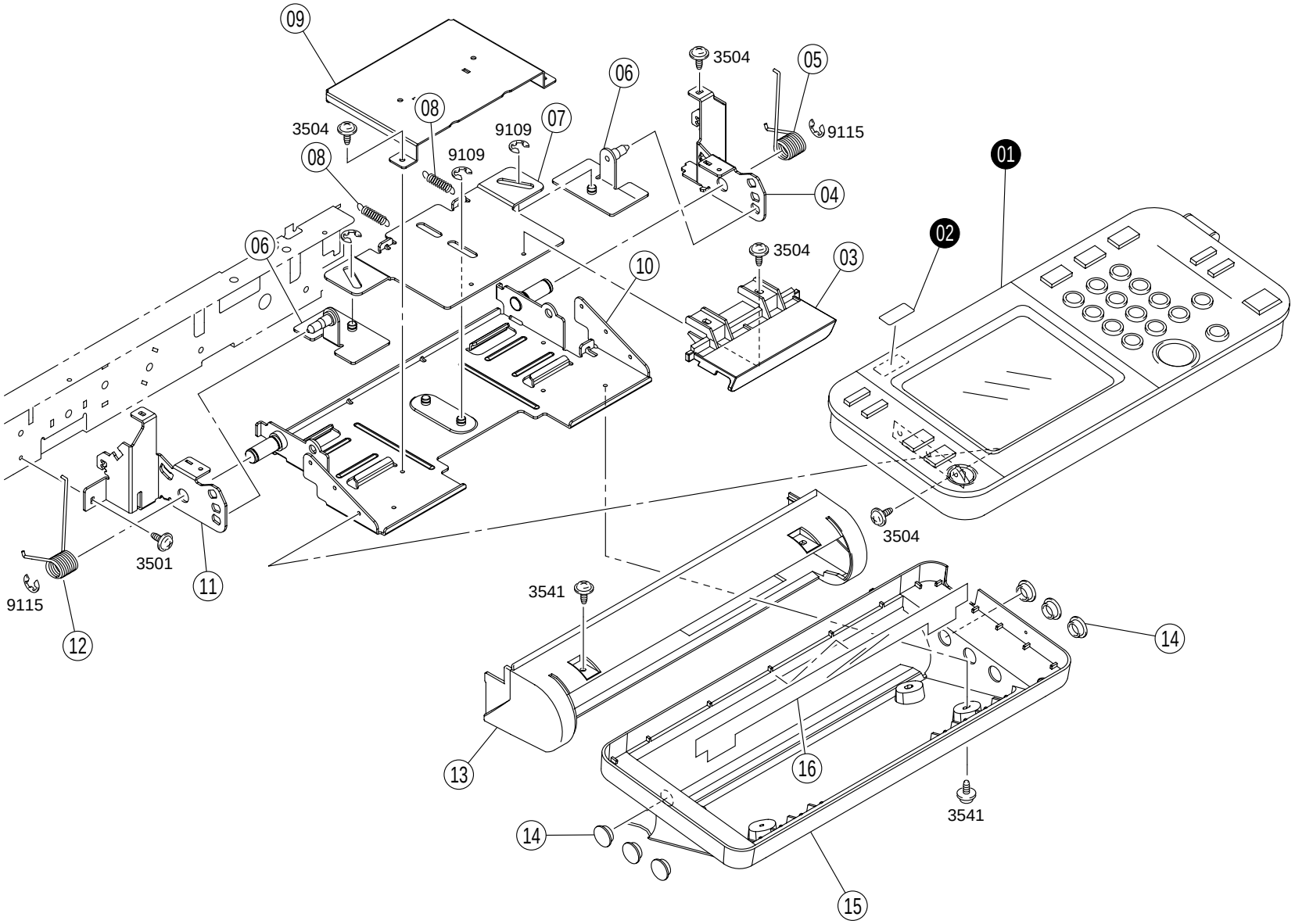

INDEX	PART NO.		PART NAME	REC	QTY	INDEX	PART NO.	PART NAME	REC	QTY
03	4030-1388-02		LEVER		1					
04	4030-1384-03	NS	HOLD PLATE		1					
05	4030-1387-01		TORSION SPRING		1					
06	4030-1385-01	NS	POSITIONING PLATE		2					
07	4030-1382-01	NS	COUPLING		1					
08	4581-1389-01	NS	TENSION SPRING		2					
09	4030-1390-03	NS	BRACKET		1					
10	4030-1381-01	NS	BRACKET		1					
11	4030-1383-02	NS	HOLD PLATE		1					
12	4030-1386-01		TORSION SPRING		1					
13	4030-1052-01		COVER		1					
14	1171-1321-01		CAP		6					
15	4030-1051-01		COVER		1					
16	4030-1053-01		SEAL		1					

INDEX	PART NO.	PART NAME		REC	QTY	SFIX
01	4030-6051-02	CONTROL PANEL ASSY	(UN1)	RP	1	011
01	4030-6052-02	CONTROL PANEL ASSY	(UN1)	RP	1	212, 214, 311, 313, 314
01	4030-6053-03	CONTROL PANEL ASSY	(UN1)	RP	1	211
01	4030-6054-03	CONTROL PANEL ASSY	(UN1)	RP	1	001
01	4030-6055-03	CONTROL PANEL ASSY	(UN1)	RP	1	202, 301, 303, 304, 307
01	4030-6056-03	CONTROL PANEL ASSY	(UN1)	RP	1	201
01	4030-6061-01	CONTROL PANEL ASSY	(UN1)	RP	1	216
02	4030-7320-01	LABEL			1	311
02	4030-7321-01	LABEL			1	301, 307

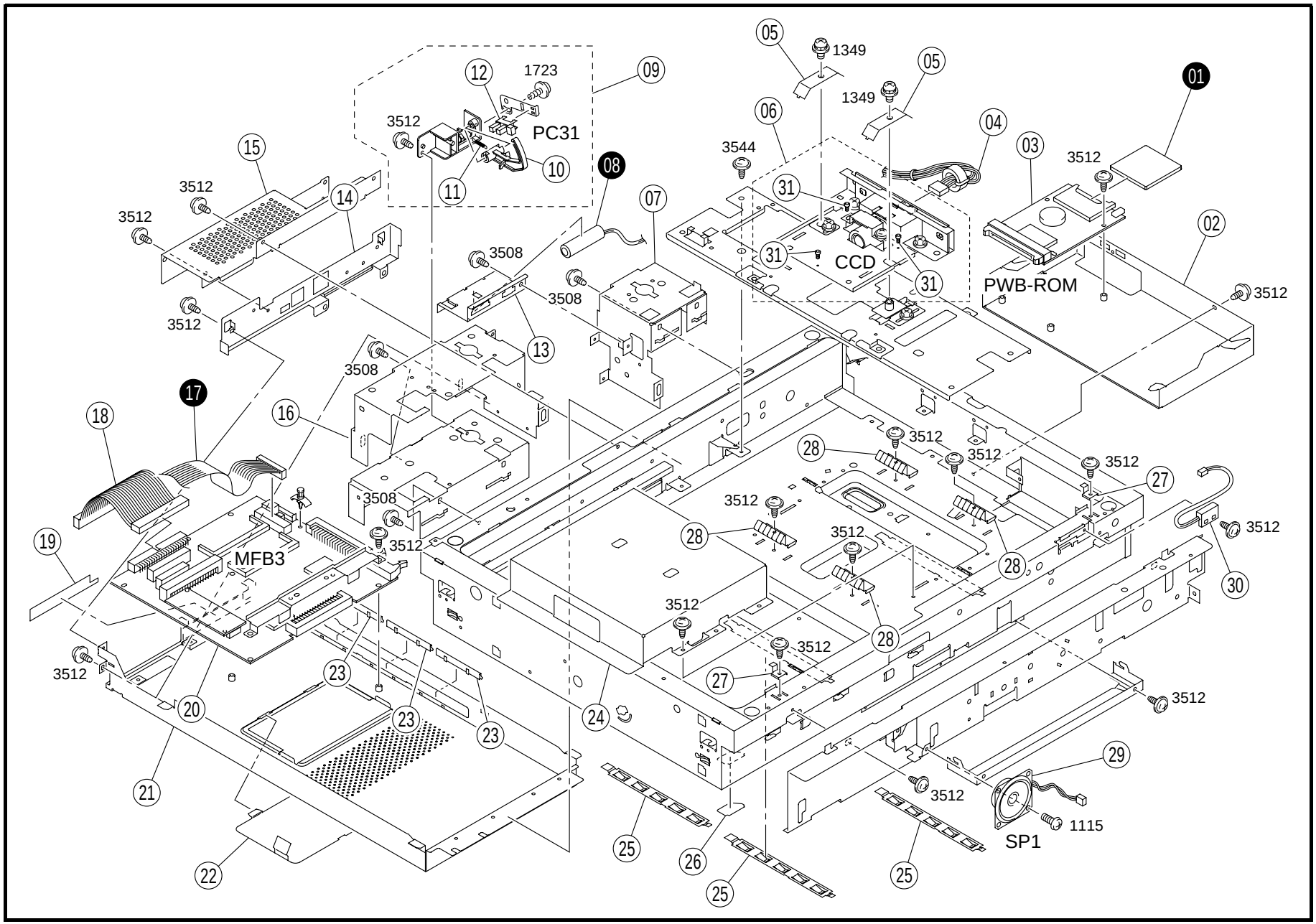
01
02
03
04
05
06
07
08
09
10
11
12
13
14
15
16
17
18
19
20
21
22
23
24
25
26
27
28
29
30
31
1349
1723
3512
3508
3544
1115
PC31
CCD
PWB-ROM
MFB3
SP1

INDEX	PART NO.		PART NAME		REC	QTY
02	4384-1093-01	NS	BRACKET			1
03	4384-1050-01		PWB ASSY	(PWB-ROM)	RP	1
04	4384-1037-01		WIRE HARNESS ASSY			1
05	4384-1063-01		PLATE SPRING			2
06	4384-1042-01		LENS ASSY	(CCD)		1
07	4384-1058-01	NS	HINGE BRACKET(R)			1
09	4384-1036-01		SOLID STATE SWITCH			1
10	4384-1045-01		ARM			1
11	4384-1044-01		TENSION SPRING			1
12	4384-1032-01		SOLID STATE SWITCH	COVER (PC31)		1
13	4384-1087-01	NS	CONNECTOR BRACKET			1
14	4384-1073-01	NS	MFB SHIELD(UN)			1
15	4384-1072-01	NS	MFB SHIELD(UP)			1
16	4384-1056-01	NS	HINGE BRACKET(L1)			1
18	4030-6804-01	NS	WIRE HARNESS ASSY			1
19	4384-1095-01		LABEL			1
20	4384-1047-01		PWB ASSY	(MFB3)	RP	1
21	4384-1065-01	NS	MFB BOX			1

INDEX	PART NO.		PART NAME	REC	QTY
22	4384-1069-01	NS	MFB COVER		1
23	4384-1094-01		PLATE SPRING		3
24	4384-1064-01	NS	RTNA SHIELD		1
25	4384-1089-01		PLATE SPRING		3
26	4384-1086-01		SHEET(BASE)		1
27	4384-1006-01		PLATE SPRING		2
28	4384-1088-01		PLATE SPRING		4
29	9373-2200-11		LOUDSPEAKER (SP1)		1
30	4384-1020-01		REED SWITCH		1
31	4384-1102-01		TAPPING SCREW		3

INDEX	PART NO.	PART NAME	REC	QTY	SFIX
01	4030-0763-01	JIG MEMORY CARD		1	011
01	4030-0764-01	JIG MEMORY CARD		1	201, 202, 211, 212, 214, 303, 304, 313, 314
01	4030-0765-01	JIG MEMORY CARD		1	301, 307, 311
01	4030-0766-01	JIG MEMORY CARD		1	216
08	4384-1003-01	CELL ACCESSORY		1	001, 201, 202, 301, 303, 304, 307
17	4384-1038-01	WIRE HARNESS ASSY		1	001, 011, 214, 301, 307, 311
17	4384-1098-01	WIRE HARNESS ASSY		1	201, 202, 211, 212, 216, 303, 304, 313, 314

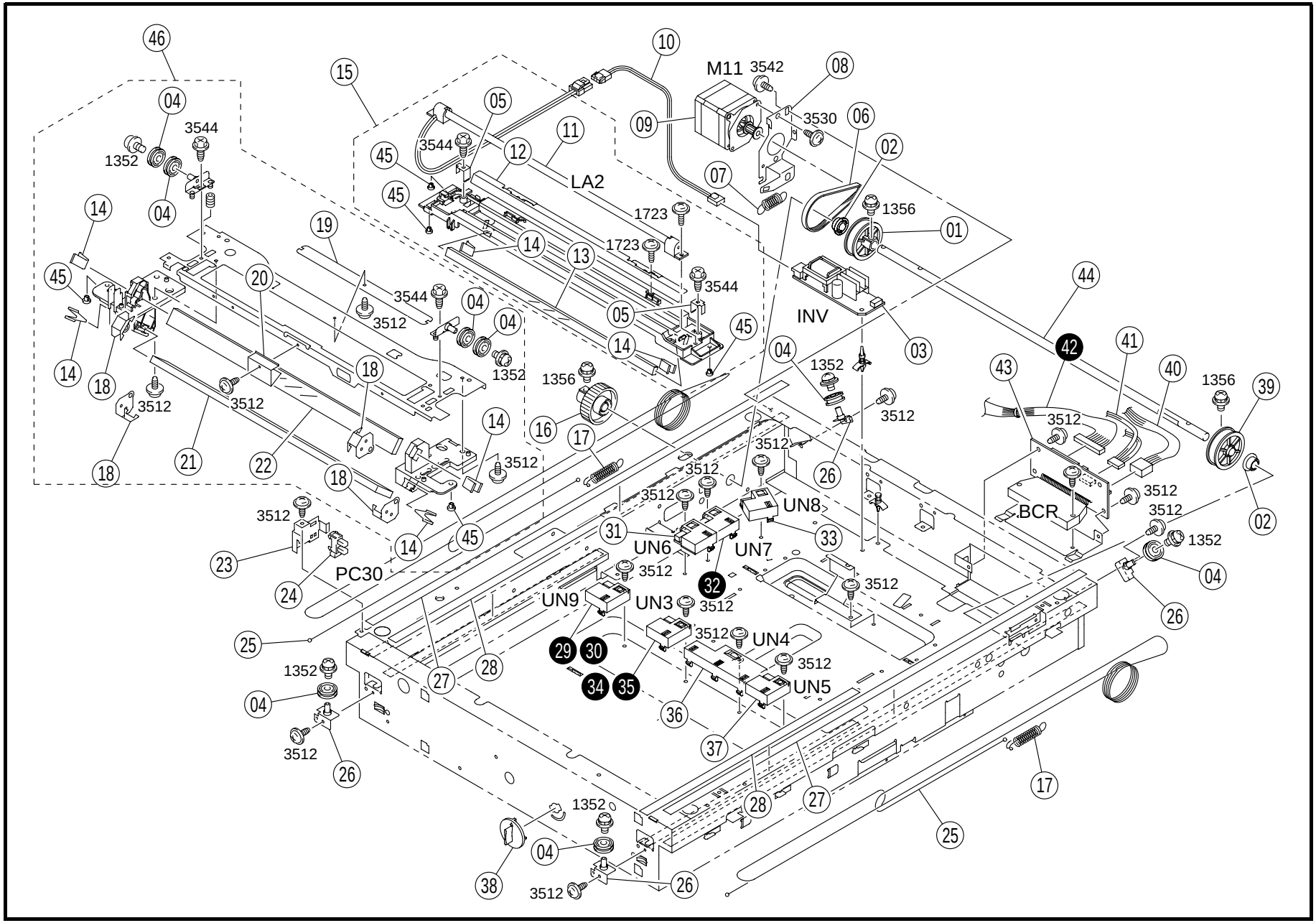
M11
3542
3530
LA2
1723
1356
INV
1352
3544
3512
UN8
UN6
UN7
UN9
UN3
UN4
UN5
PC30
BCR

INDEX	PART NO.		PART NAME			REC	QTY
01	4384-1019-01		PULLEY				1
02	4384-1021-01		BALL BEARING				2
03	4384-1027-01		PWB ASSY		(INV)	RP	1
04	4384-1017-01		PULLEY				8
05	4384-1062-01	NS	WIRE BRACKET				2
06	4384-1033-01		TIMING BELT				1
07	4384-1023-01		TENSION SPRING				1
08	4384-1070-01	NS	MOTOR BRACKET				1
09	4384-1029-01		MOTOR	SCANNER	(M11)		1
10	4384-1028-01		WIRE HARNESS ASSY				1
11	4384-1014-01		XENON		(LA2)	RP	1
12	4384-1055-01	NS	REFLECTOR				1
13	4384-1013-01		MIRROR				1
14	4384-1012-01		PLATE SPRING				6
15	4384-1034-01		CARRIAGE 1 ASSY				1
16	4384-1024-01		PULLEY				1
17	4384-1022-01		TENSION SPRING				2
18	4384-1091-01	NS	BRACKET				4
19	4384-1090-01	NS	WEIGHT				1
20	4384-1053-01		PLATE SPRING				1

INDEX	PART NO.		PART NAME			REC	QTY
21	4384-1016-01		MIRROR				1
22	4384-1015-01		MIRROR				1
23	4384-1061-01	NS	SNS BRACKET				1
24	4384-1032-01		SOLID STATE SWITCH	SCANNER	(PC30)		1
25	4384-1018-01		WIRE				2
26	4384-1068-01	NS	PULLEY BRACKET(1)				4
27	4384-1025-01		SEAL				2
28	4384-1026-01		SEAL				2
31	4384-1030-01		SOLID STATE SWITCH		(UN6)		1
33	4384-1030-01		SOLID STATE SWITCH	OPTION	(UN8)		1
36	4384-1031-01		SOLID STATE SWITCH		(UN4)		1
37	4384-1030-01		SOLID STATE SWITCH	OPTION	(UN5)		1
38	4384-1007-01		LEVER				1
39	4384-1092-01		PULLEY				1
40	4384-1041-01		WIRE HARNESS ASSY				1
41	4384-1040-01		WIRE HARNESS ASSY				1
43	4384-1043-01		PWB ASSY		(BCR)	RP	1
44	4384-1046-01	NS	SHAFT				1
45	4384-1075-01		SLIDER				5
46	4384-1035-01		CARRIAGE 2 ASSY				1

INDEX	PART NO.		PART NAME			REC	QTY	SFIX
29	4384-1030-01		SOLID STATE SWITCH		(UN9)		1	001, 011, 201, 202, 211, 212, 216, 303, 304, 313, 314
30	4384-1030-01		SOLID STATE SWITCH	OPTION	(UN9)		1	214, 301, 307, 311
32	4384-1030-01		SOLID STATE SWITCH	OPTION	(UN7)		1	201, 202, 211, 212, 214, 216, 301, 303, 304, 307, 311, 313, 314
34	4384-1030-01		SOLID STATE SWITCH		(UN3)		1	001, 011
35	4384-1030-01		SOLID STATE SWITCH	OPTION	(UN3)		1	201, 202, 211, 212, 216, 303, 304, 313, 314
42	4384-1039-01		WIRE HARNESS ASSY				1	001, 011, 214, 301, 307, 311
42	4384-1099-01		WIRE HARNESS ASSY				1	201, 202, 211, 212, 216, 303, 304, 313, 314

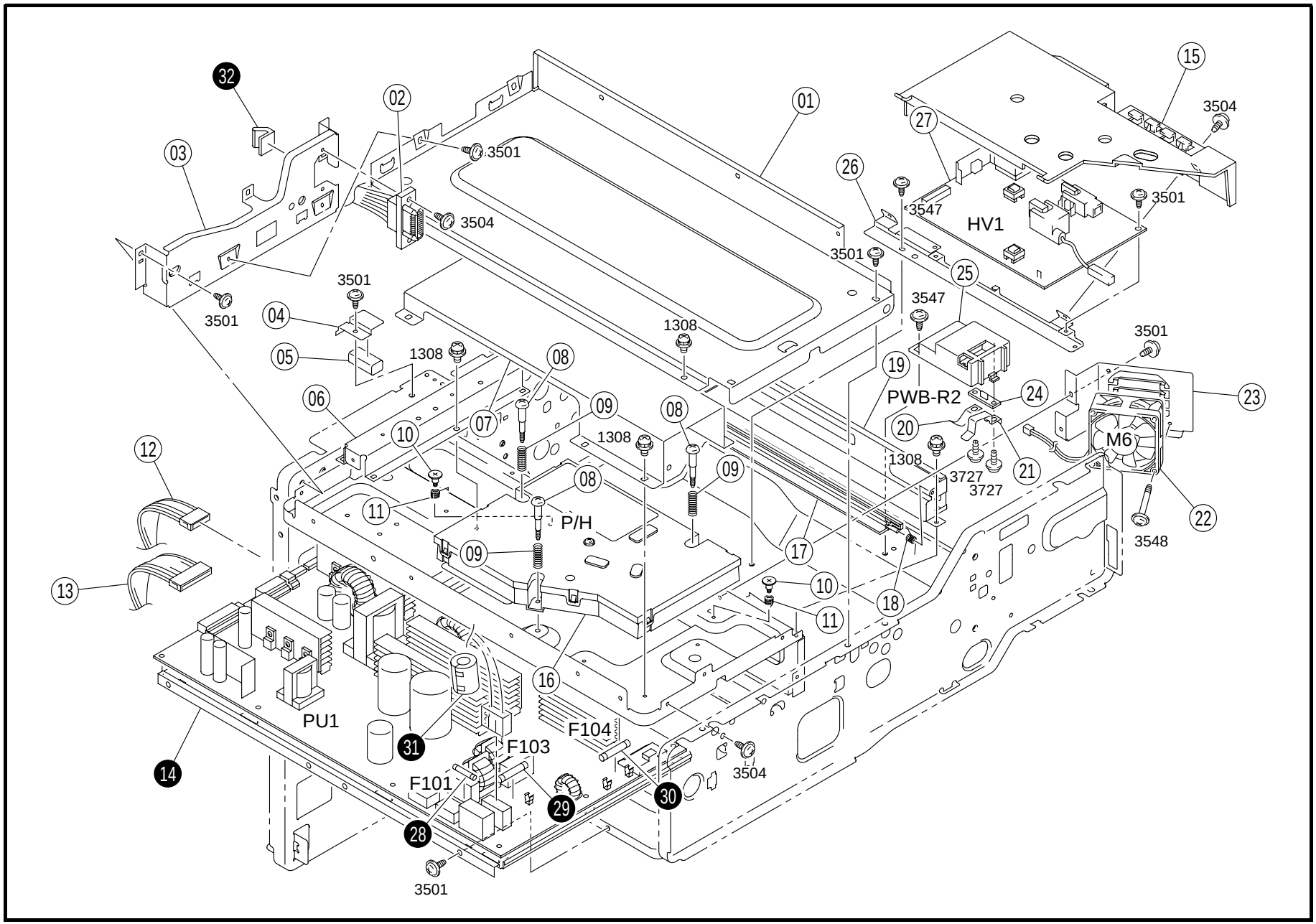
32
02
01
15
3504
27
03
3501
26
3547
HV1
3501
3504
3501
25
3501
3547
04
1308
3501
05
1308
08
19
PWB-R2
24
23
06
09
08
20
M6
10
07
1308
1308
3727
3727
21
12
08
09
11
P/H
22
3548
09
17
13
10
18
11
16
PU1
F104
31
F103
14
F101
3504
29
30
28
3501

INDEX	PART NO.		PART NAME	REC	QTY
01	4030-2017-01	NS	BRACKET		1
02	4030-6816-01	NS	WIRE HARNESS ASSY		1
03	4030-2018-01	NS	BRACKET		1
04	4030-2119-01	NS	SHIELD		1
05	4030-6757-01		ELECTRICALLY CONDUCTIVE		1
06	4030-2034-01	NS	REINFORCE PLATE		1
07	4030-2035-01	NS	REINFORCE PLATE		1
08	4128-1979-01		SHOULDER SCREW		3
09	4128-1978-01		PRESSURE SPRING		3
10	4011-5925-02		SHOULDER SCREW		2
11	4030-2049-01		TORSION SPRING		2
12	4030-6807-02	NS	WIRE HARNESS ASSY		1
13	4030-6819-03	NS	WIRE HARNESS ASSY		1
15	4011-2101-02		COVER		1
16	4030-0761-00		P/H ASSY		1
17	4030-2036-01		SHUTTER		1
18	4011-2034-02		TORSION SPRING		1
19	4030-2004-01	NS	BRACKET		1

INDEX	PART NO.		PART NAME	REC	QTY
20	1165-2091-01		CONTACT		1
21	4011-2104-01		CONTACT		1
22	9313-1100-51		FAN MOTOR I/C COOL (M6)		1
23	4030-2109-01	NS	BRACKET		1
24	4011-0112-01		PWB ASSY (PWB-R2)		1
25	4011-2103-01		HOLDER		1
26	4030-2040-01	NS	BRACKET		1
27	4030-6203-02		HV TRANSFORMER (HV1)		1

INDEX	PART NO.	PART NAME	REC	QTY	SFIX
14	9325-2200-12	POWER SUPPLY (PU1)		1	001, 011, 301, 303, 304, 307, 311, 313, 314
14	9325-2200-22	POWER SUPPLY (PU1)		1	201, 202, 211, 212, 214, 216
28	4030-7851-01	FUSE (F101)	RP	1	001, 011, 301, 303, 304, 307, 311, 313, 314
28	4030-7854-01	FUSE (F101)	RP	1	201, 202, 211, 212, 214, 216
29	1131-7802-01	FUSE 6.3A (F103)	RP	1	201, 202, 211, 212, 214, 216
29	4030-7852-01	FUSE (F103)	RP	1	001, 011, 301, 303, 304, 307, 311, 313, 314
30	1131-7802-01	FUSE 6.3A (F104)	RP	1	201, 202, 211, 212, 214, 216
30	4030-7853-01	FUSE (F104)	RP	1	001, 011, 301, 303, 304, 307, 311, 313, 314
31	0866-7801-01	FERRITE CORE		1	201, 202, 211, 212, 216, 303, 313
32	9384-4300-21	ELECTRICALLY CONDUCTIVE		1	201, 202, 211, 212, 216, 303, 313

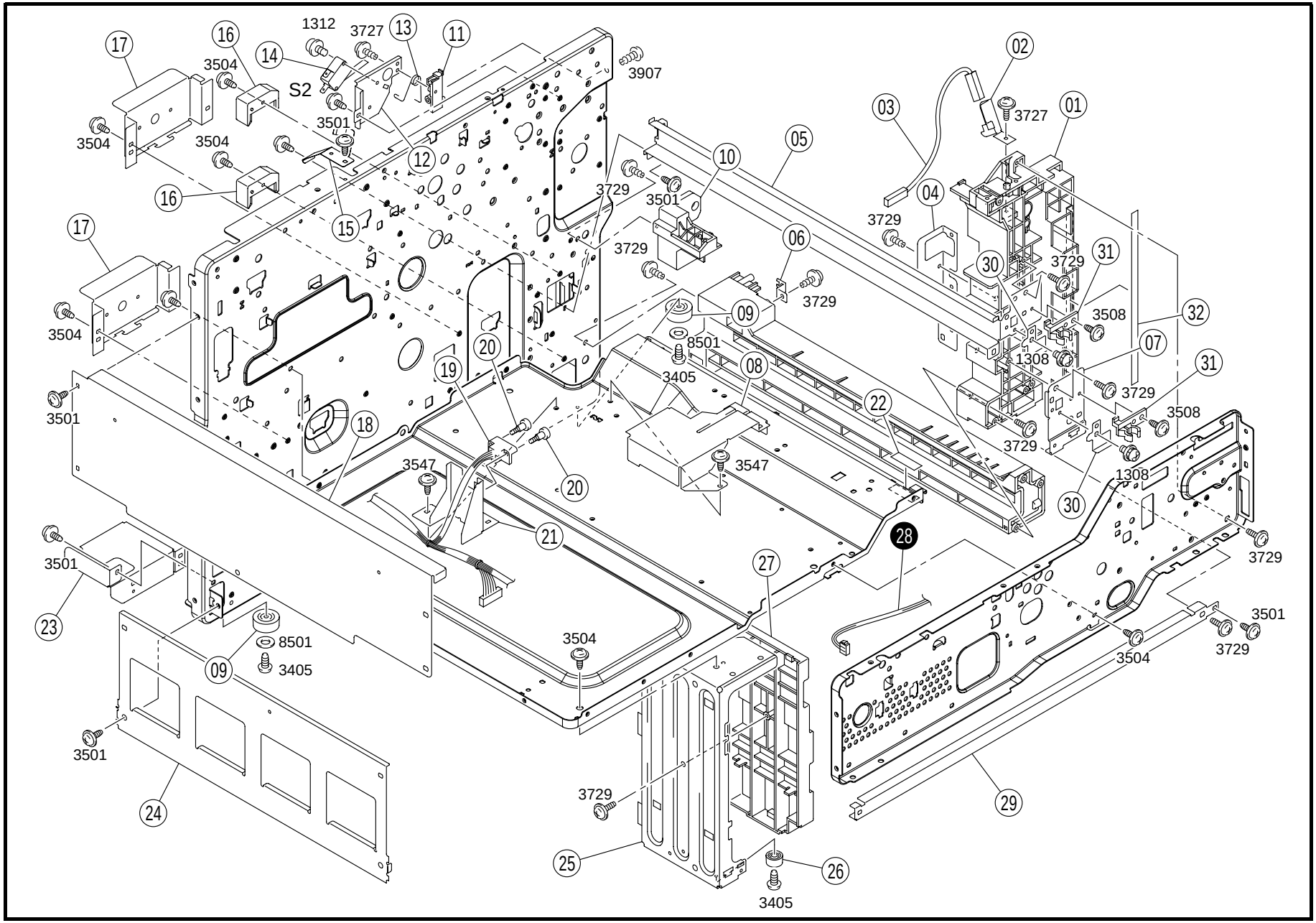
1312
3727
3907
S2
3504
3501
3729
3547
3405
8501
3508
1308
3727
3729
3504
3501
3729
3729
3729

INDEX	PART NO.		PART NAME	REC	QTY
01	4030-2026-03		STAY		1
02	1164-2155-01		CONTACT		1
03	4030-6843-01	NS	WIRE HARNESS ASSY		1
04	4030-2010-01	NS	BRACKET		1
05	4030-2029-02	NS	RAIL		1
06	4030-2011-01	NS	BRACKET		1
07	4030-2041-02	NS	BRACKET		1
08	4030-2079-01	NS	BRACKET		1
09	4030-2080-01		RUBBER FOOT		2
10	4030-2037-01		HOLDER		1
11	1164-2051-01		GUIDE		1
12	4030-2116-01	NS	BRACKET		1
13	4011-2037-01		TORSION SPRING		1
14	9331-2200-21		MICRO-SWITCH DOOR (S2)		1
15	4030-2162-01		EARTH GROUND		1
16	4030-2009-01		GUIDE		2
17	4030-2062-01	NS	BRACKET		2
18	4030-2016-01	NS	REINFORCE PLATE		1

INDEX	PART NO.		PART NAME	REC	QTY
19	4030-6806-03	NS	WIRE HARNESS ASSY		1
20	1079-2219-01		SHOULDER SCREW		2
21	4030-2012-01	NS	BRACKET		1
22	1129-7303-01		LABEL		1
23	4030-2042-02	NS	BRACKET		1
24	4030-2006-01	NS	REINFORCE PLATE		1
25	4030-2005-02	NS	REINFORCE PLATE		1
26	4030-2081-01		SPACER		1
27	4030-2008-02		RAIL		1
29	4030-2007-01	NS	REINFORCE PLATE		1
30	4030-2038-02	NS	STOPPER		2
31	4002-3123-01		HOLDER		2
32	4030-7315-01		LABEL		1

INDEX	PART NO.		PART NAME	REC	QTY	SFIX
28	1165-6832-01		HARNESS		1	001, 011

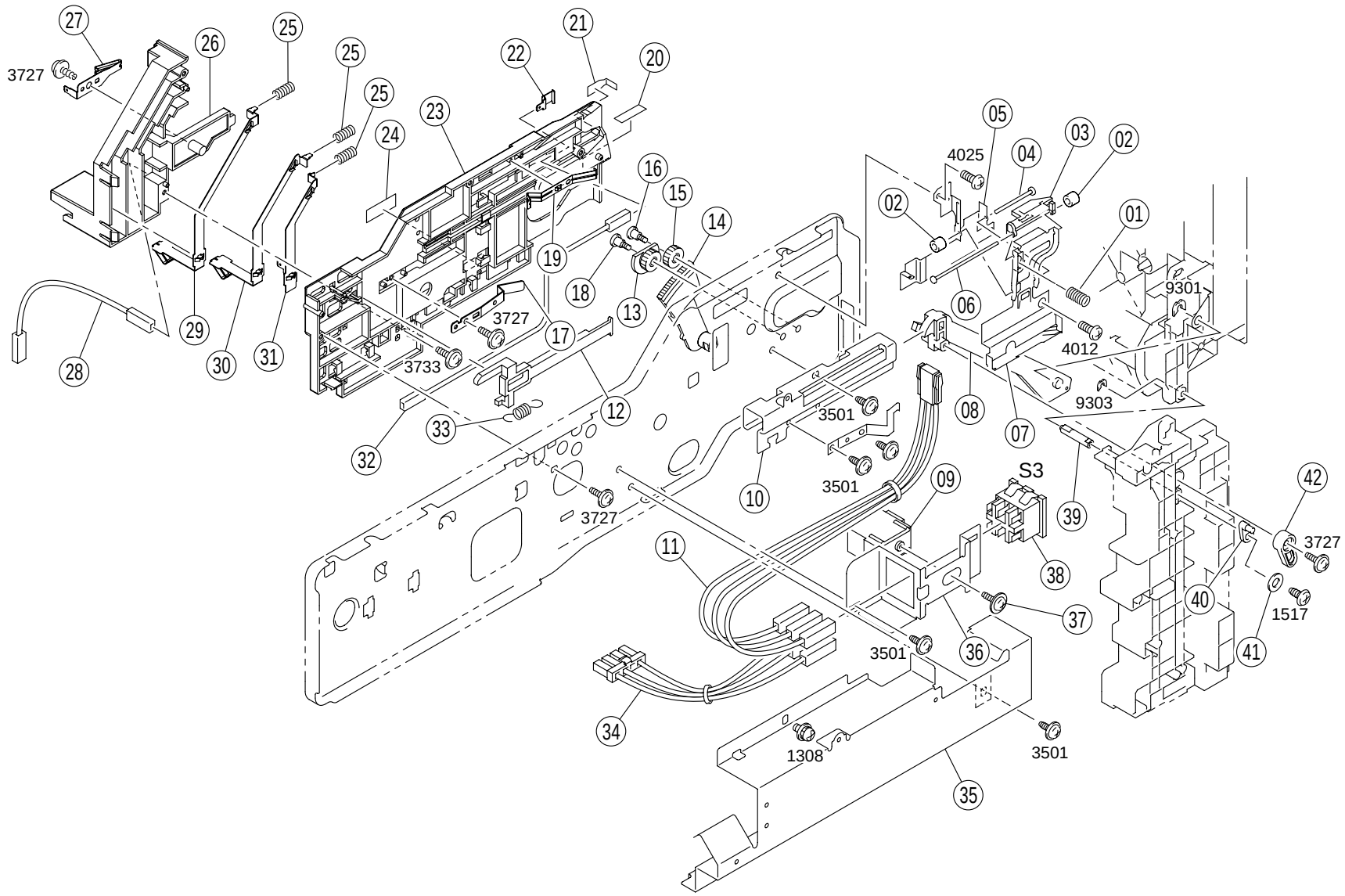
27
26
25
25
25
24
23
22
21
20
3727
16
15
14
19
18
13
17
12
3727
3733
29
30
31
28
32
33
05
03
02
04
4025
02
01
06
9301
4012
9303
08
07
3501
3501
10
09
S3
39
42
3727
38
11
37
40
1517
41
36
3501
34
1308
3501
35

INDEX	PART NO.		PART NAME	REC	QTY
01	1164-2306-02		PRESSURE SPRING		1
02	4658-3047-01		COLLAR		2
03	1164-2308-02		DETECTING PLATE		1
04	1134-3042-01	NS	PIN		1
05	1164-2301-02		BRACKET		1
06	4011-3511-01	NS	SHAFT		1
07	1164-2302-02		STOPPER		1
08	1164-2316-01		LEVER		1
09	4030-2118-01		LEVER		1
10	1164-2310-01		GUIDE PLATE		1
11	4030-6854-02	NS	WIRE HARNESS ASSY		1
12	1165-2040-02		LEVER		1
13	1164-2027-02		GEAR 14T		1
14	4011-2009-01		LEVER		1
15	1164-2026-01		GEAR		1
16	1164-2028-01		SHOULDER SCREW		1
17	1164-2021-02		PLATE SPRING		1
18	1164-2084-01		SHOULDER SCREW		1
19	1165-2142-01	NS	EARTH GROUND		1
20	4030-7316-01		LABEL		1
21	4011-2047-01		SEAL		1

INDEX	PART NO.		PART NAME	REC	QTY
22	1165-2153-01	NS	CONTACT		1
23	4030-2019-01		GUIDE		1
24	1129-7303-01		LABEL		1
25	4011-2134-01		PRESSURE SPRING		3
26	4030-2102-01		HOLDER		1
27	4030-2114-01		CONTACT		1
28	4030-6842-01	NS	WIRE HARNESS ASSY		1
29	4030-2115-01		CONTACT		1
30	4030-2113-01		CONTACT		1
31	4030-2112-01		CONTACT		1
32	4030-6844-01	NS	WIRE HARNESS ASSY		1
33	4011-2035-01		TENSION SPRING		1
34	4030-6853-02	NS	WIRE HARNESS ASSY		1
35	4030-2123-01	NS	BRACKET		1
36	4030-2117-01	NS	BRACKET		1
37	4109-2003-01		SHOULDER SCREW		1
38	9331-1810-11		MICRO SWITCH DOOR (S3)		1
39	4011-2010-01		SHAFT		1
40	1164-2007-12		JOINT		1
41	4111-2531-01		WASHER		1
42	4011-2008-01		LEVER		1

INDEX	PART NO.	PART NAME	REC	QTY	SFIX

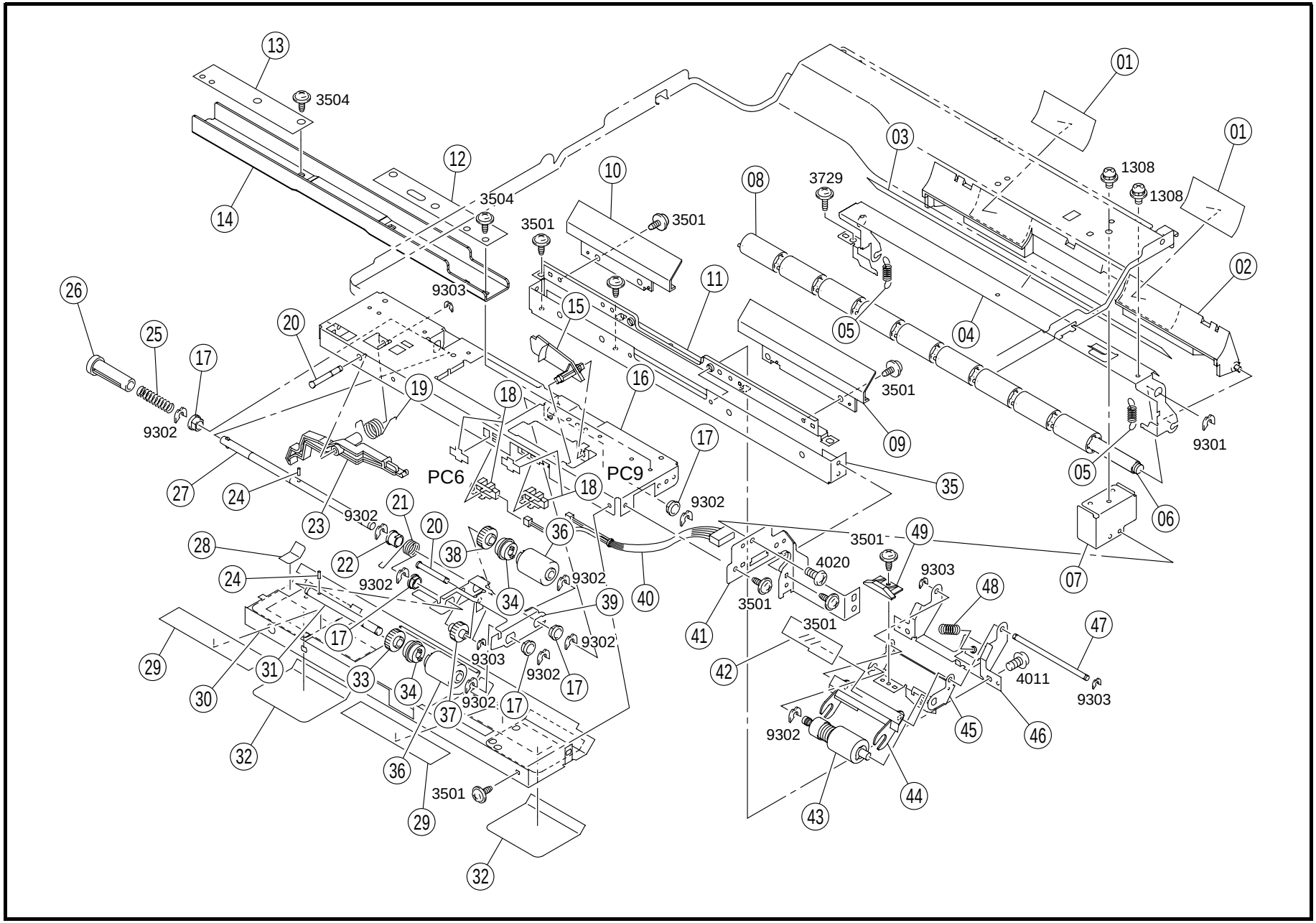
PC6
PC9

INDEX	PART NO.		PART NAME		REC	QTY
01	4030-3108-01		GUIDE			2
02	4030-3032-03		GUIDE			1
03	4030-3104-01		GUIDE			1
04	4030-3103-02	NS	BRACKET			1
05	4030-3125-01		TENSION SPRING			2
06	4030-3101-01	NS	SHAFT			1
07	4030-3044-01	NS	BRACKET			1
08	4658-3513-01		ROLLER			9
09	4030-3026-02		GUIDE			1
10	4030-3027-02		GUIDE			1
11	4030-3037-01	NS	REINFORCE PLATE			1
12	4030-3086-01	NS	REINFORCE PLATE			1
13	4030-3087-01	NS	REINFORCE PLATE			1
14	4030-3084-01	NS	REINFORCE PLATE			1
15	4030-3016-01		ACTUATOR			1
16	4030-3001-03	NS	FRAME			1
17	4131-3003-01		BUSHING			5
18	4131-0902-01		PHOTO INTERRUPTER	(PC6.9)		2
19	4030-3012-01		TORSION SPRING			1
20	4030-3020-01	NS	SHAFT			2
21	4030-3030-01		TORSION SPRING			1
22	1065-3086-01		BUSHING			1
23	4030-3011-01		LEVER			1
24	1067-2501-01		PIN			2
25	1070-3072-01		PRESSURE SPRING			1

INDEX	PART NO.		PART NAME		REC	QTY
26	1052-4412-01		JOINT			1
27	4030-3004-01		SHAFT			1
28	4030-3085-01		COVER			1
29	4030-3088-01	NS	WEIGHT			2
30	4030-3023-03	NS	GUIDE PLATE			1
31	4030-3003-01		SHAFT			1
32	4030-3036-01		GUIDE			2
33	4425-3016-01		GEAR			1
34	4030-3034-01		CLUTCH			2
35	4030-3025-02	NS	BRACKET			1
36	4030-3005-01		ROLLER		RP	2
37	4030-3008-01		GEAR			1
38	4425-3013-01		GEAR			1
39	4030-3002-02	NS	HOLDER			1
40	4030-6811-01	NS	WIRE HARNESS ASSY			1
41	4030-3041-02	NS	FRAME			1
42	4030-3079-01		GUIDE			1
43	4030-0151-01		ROLLER ASSY		RP	1
44	4030-3077-01		GUIDE			1
45	4030-3013-01	NS	HOLDER			1
46	4030-3014-01	NS	BRACKET			1
47	4030-3039-01		SHAFT			1
48	4030-3017-02		PRESSURE SPRING			1
49	4030-3078-01		LEVER			1

INDEX	PART NO.	PART NAME	REC	QTY	SFIX

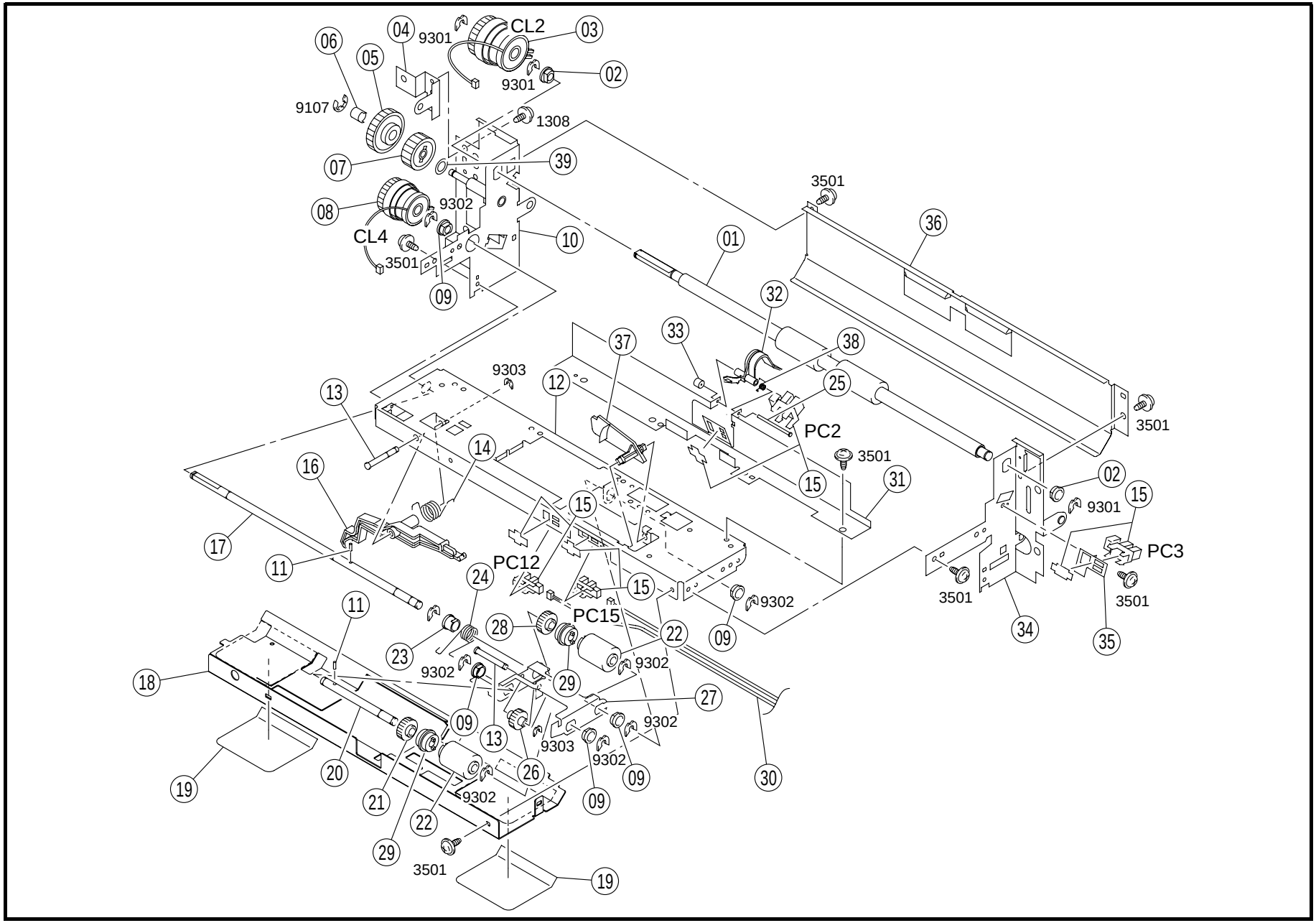
CL2
9301
9301
9107
1308
9302
CL4
3501
3501
9303
PC2
3501
3501
9301
PC3
3501
3501
PC12
PC15
9302
9302
9302
9303
9302
9302
3501

INDEX	PART NO.		PART NAME	REC	QTY
01	4030-3021-01		ROLLER		1
02	4131-3532-02		BUSHING		2
03	9322-1200-31		CLUTCH TRANSPORT (CL2)		1
04	4030-3063-01	NS	BRACKET		1
05	4030-3064-01		GEAR		1
06	4030-3069-01		SLEEVE		1
07	4030-3068-01		GEAR		1
08	9322-1200-21		CLUTCH TAKE-UP2 (CL4)		1
09	4131-3003-01		BUSHING		5
10	4030-0203-03	NS	FRAME ASSY		1
11	1067-2501-01		PIN		2
12	4030-3010-01	NS	FRAME		1
13	4030-3020-01	NS	SHAFT		2
14	4030-3012-01		TORSION SPRING		1
15	4131-0902-01		PHOTO INTERRUPTER (PC2.3.12.15)		4
16	4030-3011-01		LEVER		1
17	4030-3022-01	NS	SHAFT		1
18	4030-3023-03	NS	GUIDE PLATE		1
19	4030-3036-01		GUIDE		2
20	4030-3003-01		SHAFT		1
21	4425-3016-01		GEAR		1
22	4030-3005-01		ROLLER	RP	2
23	1065-3086-01		BUSHING		1
24	4030-3030-01		TORSION SPRING		1
25	1200-5212-04		PIN		1
26	4030-3008-01		GEAR		1
27	4030-3002-02	NS	HOLDER		1
28	4425-3013-01		GEAR		1
29	4030-3034-01		CLUTCH		2
30	4030-6812-02	NS	WIRE HARNESS ASSY		1
31	4030-3018-01	NS	BRACKET		1
32	4030-3019-02		ACTUATOR		1
33	1200-2105-05		COLLAR		1
34	4030-3042-02	NS	FRAME		1
35	4030-3128-01	NS	BRACKET		1
36	4030-3112-02	NS	GUIDE PLATE		1
37	4030-3016-01		ACTUATOR		1
38	4030-3031-01		TORSION SPRING		1
39	1200-1342-03		WASHER		1

INDEX	PART NO.	PART NAME	REC	QTY	SFIX

11 LOWER PAPER TAKE-UP SECTION (B) Di3510/Di3510f

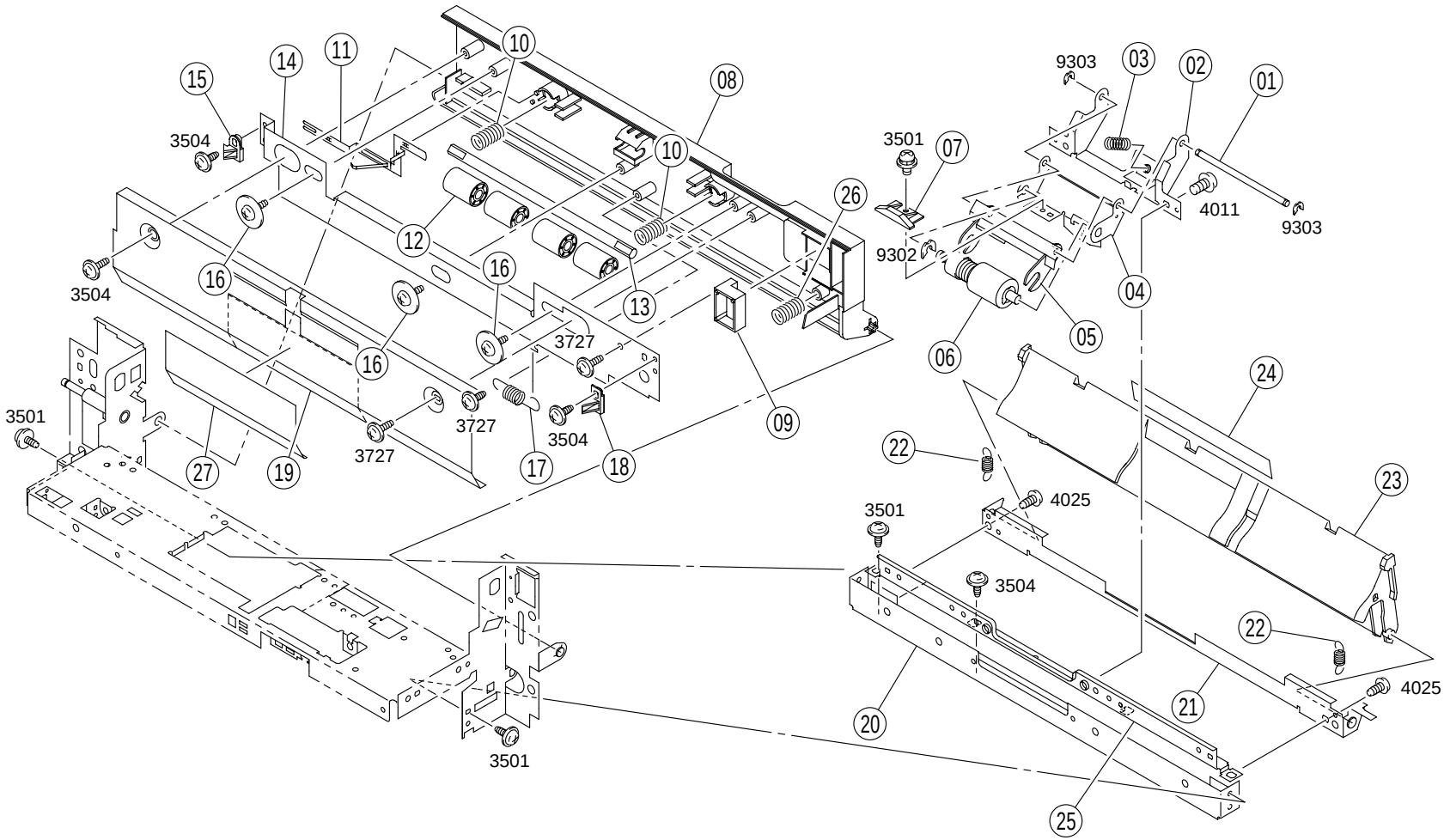

INDEX	PART NO.		PART NAME	REC	QTY
01	4030-3039-01		SHAFT		1
02	4030-3014-01	NS	BRACKET		1
03	4030-3017-02		PRESSURE SPRING		1
04	4030-3013-01	NS	HOLDER		1
05	4030-3077-01		GUIDE		1
06	4030-0151-01		ROLLER ASSY	RP	1
07	4030-3078-01		LEVER		1
08	4030-3111-02		DOOR		1
09	4030-3130-02		HANDLE		1
10	4030-3123-01		PRESSURE SPRING		2
11	4030-3134-03		EARTH GROUND		1
12	4030-3122-01		ROLL		4
13	4030-3121-01	NS	SHAFT		1
14	4030-3117-02	NS	BRACKET		1
15	4030-3115-01		LEVER		1
16	4163-5293-01		SCREW		3
17	4030-3116-01		TENSION SPRING		1
18	4030-3135-01		LEVER		1
19	4030-3114-02	NS	GUIDE PLATE		1
20	4030-3025-02	NS	BRACKET		1
21	4030-3129-03	NS	BRACKET		1
22	4030-3125-01		TENSION SPRING		2
23	4030-3124-03		GUIDE		1
24	4030-3105-01		GUIDE		1
25	4030-3037-01	NS	REINFORCE PLATE		1
26	1149-3454-01		PRESSURE SPRING		1
27	4030-3107-01		GUIDE		1

INDEX	PART NO.	PART NAME	REC	QTY	SFIX

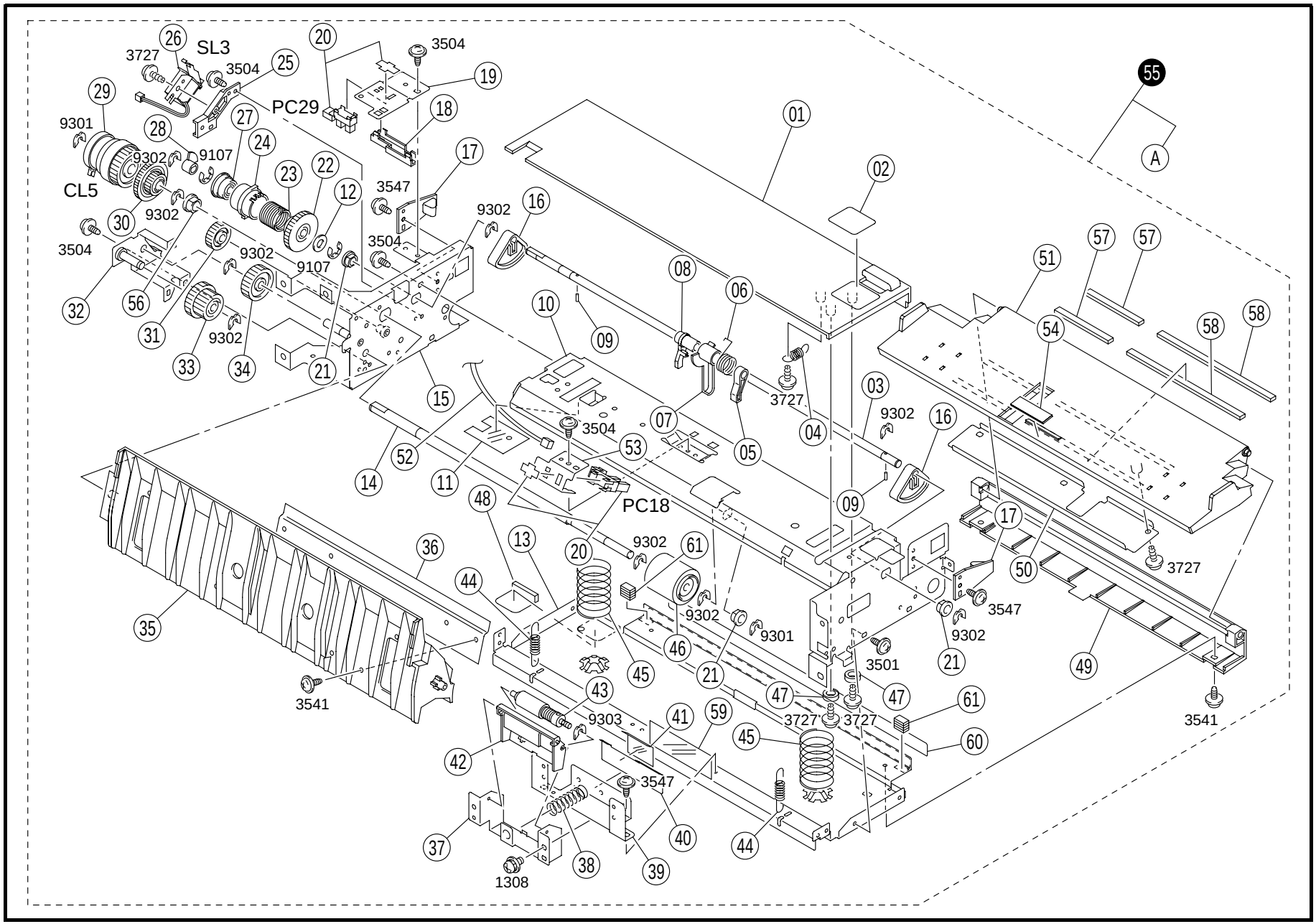
SL3
PC29
CL5
PC18
3727
3504
9301
9302
9107
3547
3541
9303
1308
3501
A
55

INDEX	PART NO.		PART NAME			REC	QTY
01	4030-3442-02		COVER				1
02	4030-3754-01		LABEL				1
03	4030-3416-01	NS	SHAFT				1
04	4030-3438-01		TENSION SPRING				1
05	4030-3465-01		HOLDER				1
06	4030-3445-01		TORSION SPRING				1
07	4030-3444-01		ACTUATOR				1
08	4030-3464-01		HOLDER				1
09	1067-2502-01		PIN				2
10	4030-3432-04	NS	BRACKET				1
11	4030-3447-01		GUIDE				1
12	4131-4128-01		WASHER				1
13	4030-3424-01	NS	BRACKET				1
14	4030-3434-01		SHAFT				1
15	4030-0204-01	NS	BRACKET ASSY				1
16	4030-3417-01		CAM				2
17	4030-3430-01		LEVER				2
18	4030-3429-02		MEMBER				1
19	4030-3479-01	NS	BRACKET				1
20	4131-0902-01		PHOTO INTERRUPTER		(PC18.29)		2
21	1274-2611-01		BUSHING				3
22	4131-3004-02		GEAR				1
23	4030-3419-01		TORSION SPRING			RP	1
24	4030-3420-01		RATCHET				1
25	4030-3422-01		HOLDER				1
26	9321-2100-41		SOLENOID	PICK-UP	(SL3)		1
27	4131-3007-02		DRUM				1
28	4030-3478-01		SHIELD PLATE				1
29	9322-1200-31		CLUTCH	TAKE-UP	(CL5)		1
30	4030-3467-01		GEAR				1

INDEX	PART NO.		PART NAME	REC	QTY
31	1300-3322-17		GEAR 20T		1
32	4030-0205-01	NS	BRACKET ASSY		1
33	4030-3441-01		GEAR		1
34	1075-2565-01		GEAR 25T		1
35	4030-3401-13		HOLDER		1
36	4030-3427-01	NS	REINFORCE PLATE		1
37	4030-3404-01	NS	BRACKET		1
38	4131-3054-02		PRESSURE SPRING		1
39	4030-3474-01	NS	BRACKET		1
40	4030-3402-01		GUIDE PLATE		1
41	4030-3403-01		GUIDE		1
42	4131-3053-02		HOLDER		1
43	4658-0151-01		ROLLER ASSY	RP	1
44	4030-3428-01		TENSION SPRING		2
45	4030-3457-03		PRESSURE SPRING		2
46	4131-3001-01		ROLLER	RP	1
47	4030-3481-01		COLLAR		2
48	4030-3448-01		CUSHION		1
49	4030-3425-01		HOLDER		1
50	4030-3456-01	NS	REINFORCE PLATE		1
51	4030-3409-03		LIFTING PLATE		1
52	4030-6818-01	NS	WIRE HARNESS ASSY		1
53	4030-3443-02	NS	BRACKET		1
54	4687-3281-01		FRICTION SHEET		1
56	4658-3517-01		BUSHING		1
57	4030-3476-01		SEAL		2
58	4030-3477-01		SEAL		2
59	4030-3489-01		SEAL		1
60	4030-3490-01		SEAL		1
61	4011-2006-01		RUBBER FOOT		2

INDEX	PART NO.	PART NAME	REC	QTY	SFIX
55	4030-0752-00	MANUAL FEED TRAY UNIT		1	001, 011
55	4030-0753-00	MANUAL FEED TRAY UNIT		1	201, 202, 211, 212, 216, 303, 304, 313, 314
55	4030-0754-00	MANUAL FEED TRAY UNIT		1	214, 301, 307, 311

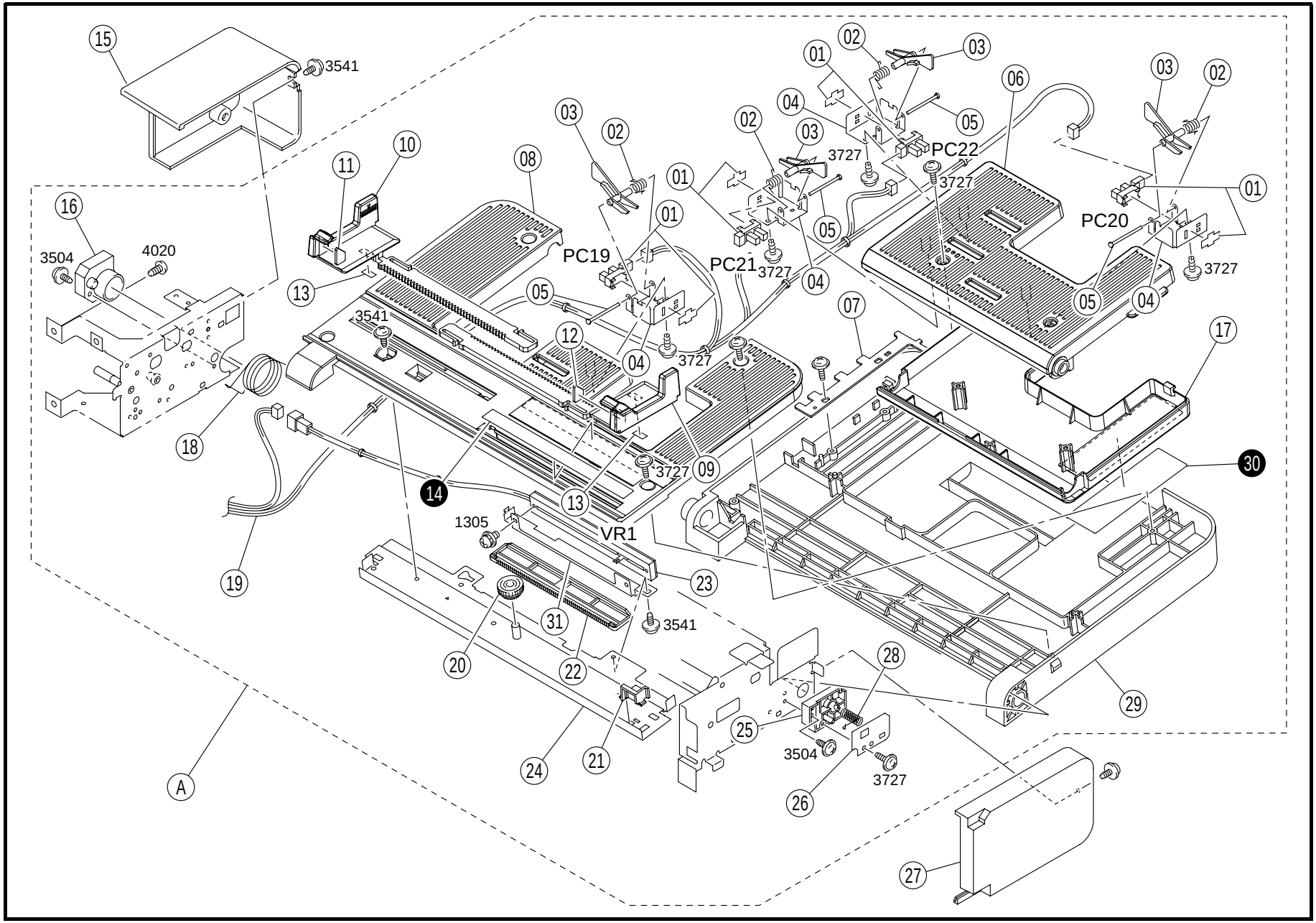
15
3541
16
3504
4020
11
10
08
13
3541
12
18
19
14
1305
VR1
23
31
20
22
24
21
A
03
02
01
PC19
05
04
3727
09
PC21
PC22
06
07
PC20
17
30
28
25
26
29
27

INDEX	PART NO.		PART NAME	REC	QTY
01	4131-0902-01		PHOTO INTERRUPTER SIZE (PC19-22)		4
02	4030-3446-01		TORSION SPRING		4
03	4030-3415-01		ACTUATOR		4
04	4030-3414-01	NS	BRACKET		4
05	1134-3042-01	NS	PIN		4
06	4030-3423-03		TRAY		1
07	4030-3461-01	NS	MEMBER		1
08	4030-3466-02		COVER		1
09	4030-3410-03		REGULATING PLATE		1
10	4030-3411-03		REGULATING PLATE		1
11	4030-3486-01		BRAKE		1
12	4030-3487-01		BRAKE		1
13	4131-4623-03		CLEANING PAD		2
15	4030-3426-01		COVER		1
16	4030-3472-01		HOLDER		1
17	4030-3459-02		COVER		1
18	4030-3436-01		TORSION SPRING		1
19	4030-6814-03	NS	WIRE HARNESS ASSY		1

INDEX	PART NO.		PART NAME	REC	QTY
20	4030-3412-01		GEAR		1
21	4030-3463-01		STOPPER		1
22	4030-3460-02		RACK		1
23	1075-0130-02		RESISTOR SIZE (VR1)		1
24	4030-0216-03	NS	BRACKET ASSY		1
25	4030-3473-02		HOLDER		1
26	4030-3437-01	NS	BRACKET		1
27	4030-3480-01		COVER		1
28	4030-3435-01		TORSION SPRING		1
29	4030-3408-03		TRAY		1
31	4030-3455-02	NS	BRACKET		1

INDEX	PART NO.	PART NAME	REC	QTY	SFIX
14	4030-7306-02	SCALE		1	001, 011
14	4030-7307-02	SCALE		1	201, 202, 211, 212, 216, 303, 304, 313, 314
14	4030-7308-02	SCALE		1	214, 301, 307, 311
30	4030-7305-01	LABEL		1	001, 011
30	4030-7309-02	LABEL		1	201, 202, 211, 212, 214, 216, 301, 303, 304, 307, 311, 313, 314

14 HOPPER SECTION Di3510/Di3510f

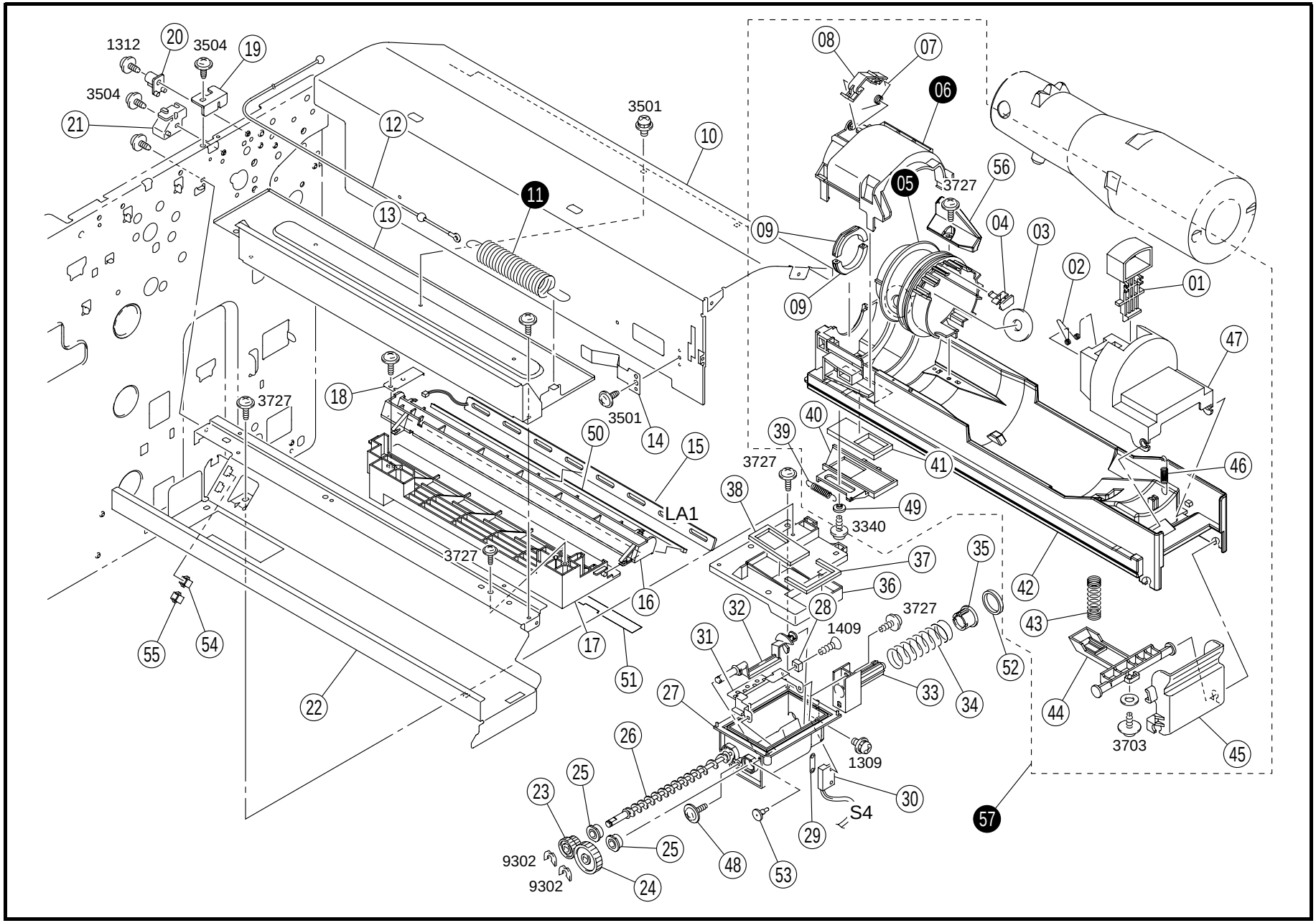

INDEX	PART NO.		PART NAME			REC	QTY
01	4030-5393-01		HANDLE				1
02	4030-5394-01		TORSION SPRING				1
03	1165-5327-03		SEAL				1
04	1165-5325-01		PIN				3
07	4030-5388-01		TORSION SPRING				1
08	4030-5387-02		STOPPER				1
09	1151-5023-01		SUPPORT				2
10	4030-1019-01	NS	COVER				1
12	4030-2047-01		WIRE				1
13	4030-2051-02	NS	GUIDE				1
14	4030-5396-01		PLATE SPRING				1
15	9351-1200-11		INCANDESCENT LAMP	ERASER	(LA1)		1
16	1165-4305-02		HOLDER				1
17	4030-2055-01	NS	HOLDER				1
18	1165-4308-02		PLATE SPRING				1
19	4030-2046-01		STOPPER				1
20	4030-2043-01		GUIDE				1
21	1164-2050-01		GUIDE				1
22	4030-2050-02	NS	BRACKET				1
23	4030-5379-01		GEAR				1
24	4030-5378-01		GEAR				1
25	4163-5278-01		BUSHING				2
26	4030-0152-01		SCREW ASSY				1
27	4030-5360-01		HOUSING				1
28	9326-2900-06		MAGNET				1
29	4011-5339-01		PLATE NUT				1
30	9334-2710-11		SWITCH	TONER EMP	(S4)		1

INDEX	PART NO.		PART NAME	REC	QTY
31	4030-5364-01	NS	DETECTING PLATE		1
32	4030-0153-01		STIRRING PLATE ASSY		1
33	4030-5365-01		DUCT		1
34	1165-5309-02		PRESSURE SPRING		1
35	1165-5308-01		SHUTTER		1
36	4030-5361-02		REGULATING PLATE		1
37	4030-5385-02		SEAL		1
38	4030-5319-01		SEAL		1
39	4030-5386-01		TENSION SPRING		1
40	4030-5383-02		SHUTTER		1
41	4030-5384-01		SEAL		1
42	4030-5381-02		TRAY		1
43	4030-5390-01		PRESSURE SPRING		1
44	4030-5395-01		PAWL		1
45	4030-5389-01		HANDLE		1
46	4030-5392-01		TENSION SPRING		1
47	4030-5391-01		STOPPER		1
48	4109-2003-01		SHOULDER SCREW		1
49	4030-5398-01		COLLAR		1
50	1165-4307-01		SEAL		1
51	1165-4310-01		SEAL		1
52	1165-5319-01		SEAL		1
53	4011-5338-01		PIN		1
54	9383-2210-11		CONNECTOR 2P		1
55	9383-2200-11		PLUG HOUSING		1
56	4030-5313-01		GUIDE		1

INDEX	PART NO.	PART NAME	REC	QTY	SFIX
05	4030-5314-01	HOLDER		1	001, 011
05	4030-5382-01	HOLDER		1	201, 202, 211, 212, 214, 216, 301, 303, 304, 307, 311, 313, 314
06	4030-5315-01	HOLDER		1	001, 011
06	4030-5380-01	HOLDER		1	201, 202, 211, 212, 214, 216, 301, 303, 304, 307, 311, 313, 314
11	4030-2044-02	TENSION SPRING		1	011
11	4030-2045-01	TENSION SPRING		1	001, 201, 202, 211, 212, 214, 216, 301, 303, 304, 307, 311, 313, 314
57	4030-0758-00	HOPPER UNIT		1	201, 202, 211, 212, 214, 216, 301, 303, 304, 307, 311, 313, 314
57	4030-0767-00	HOPPER UNIT		1	001, 011

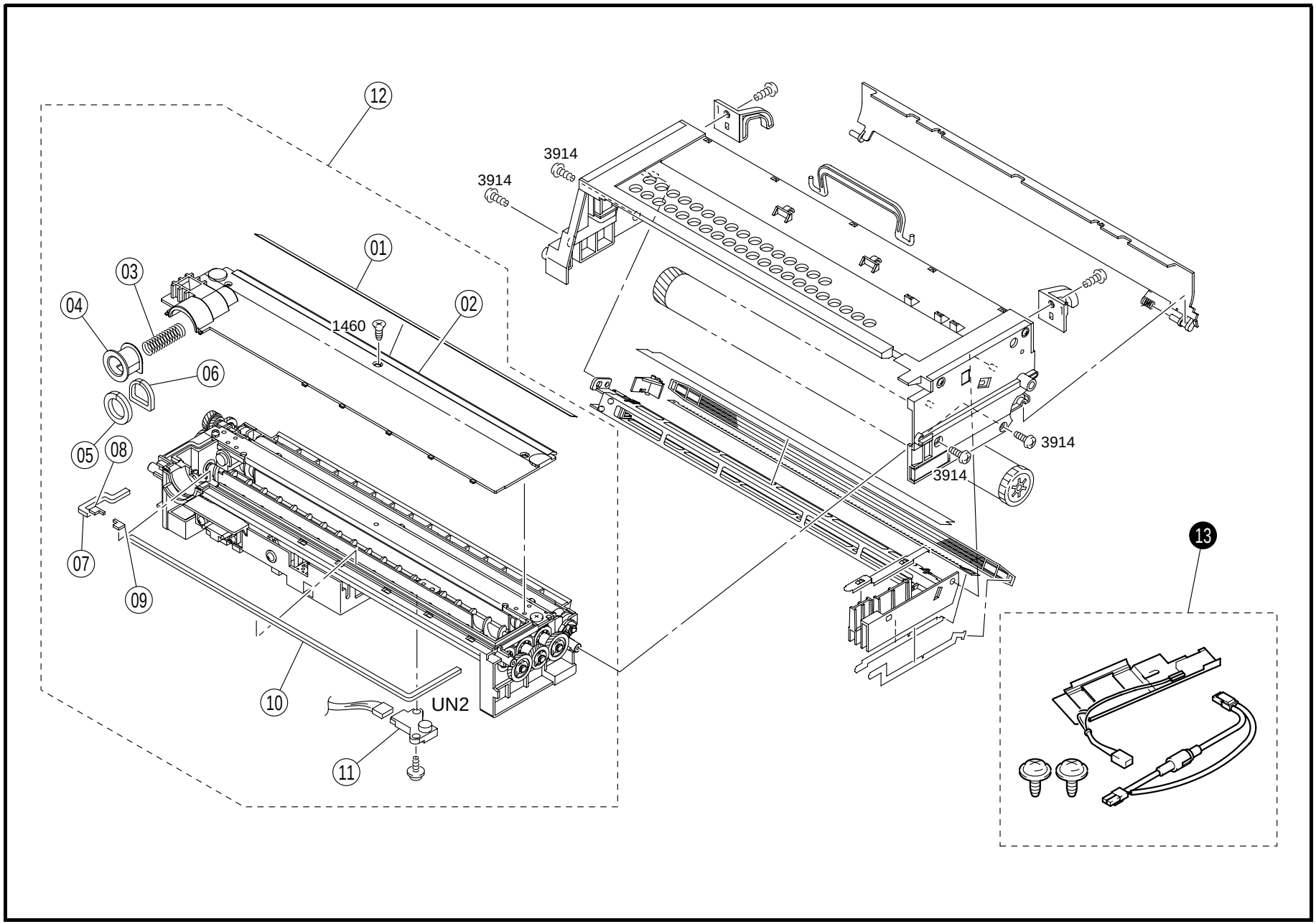
12
3914
3914
01
03
04
1460
02
06
05
08
07
09
10
UN2
11
3914
3914
13

INDEX	PART NO.	PART NAME	REC	QTY	INDEX	PART NO.	PART NAME	REC	QTY
01	4030-5204-01	SEAL		1					
02	4030-5203-02	LID		1					
03	4163-5210-02	PRESSURE SPRING		1					
04	4163-5205-01	SHUTTER		1					
05	4163-5238-01	SEAL		1					
06	4163-5208-01	SEAL		1					
07	4163-5209-01	SEAL		1					
08	4163-5240-01	SEAL		1					
09	4163-5239-01	SEAL		1					
10	4163-5207-01	SEAL		1					
11	4515-6051-01	PWB ASSY ATDC (UN2)		1					
12	4515-711	DEVELOPING UNIT		1					

INDEX	PART NO.	PART NAME	REC	QTY	SFIX
13	1171-0903-02	HEATER KIT		1	001, 011

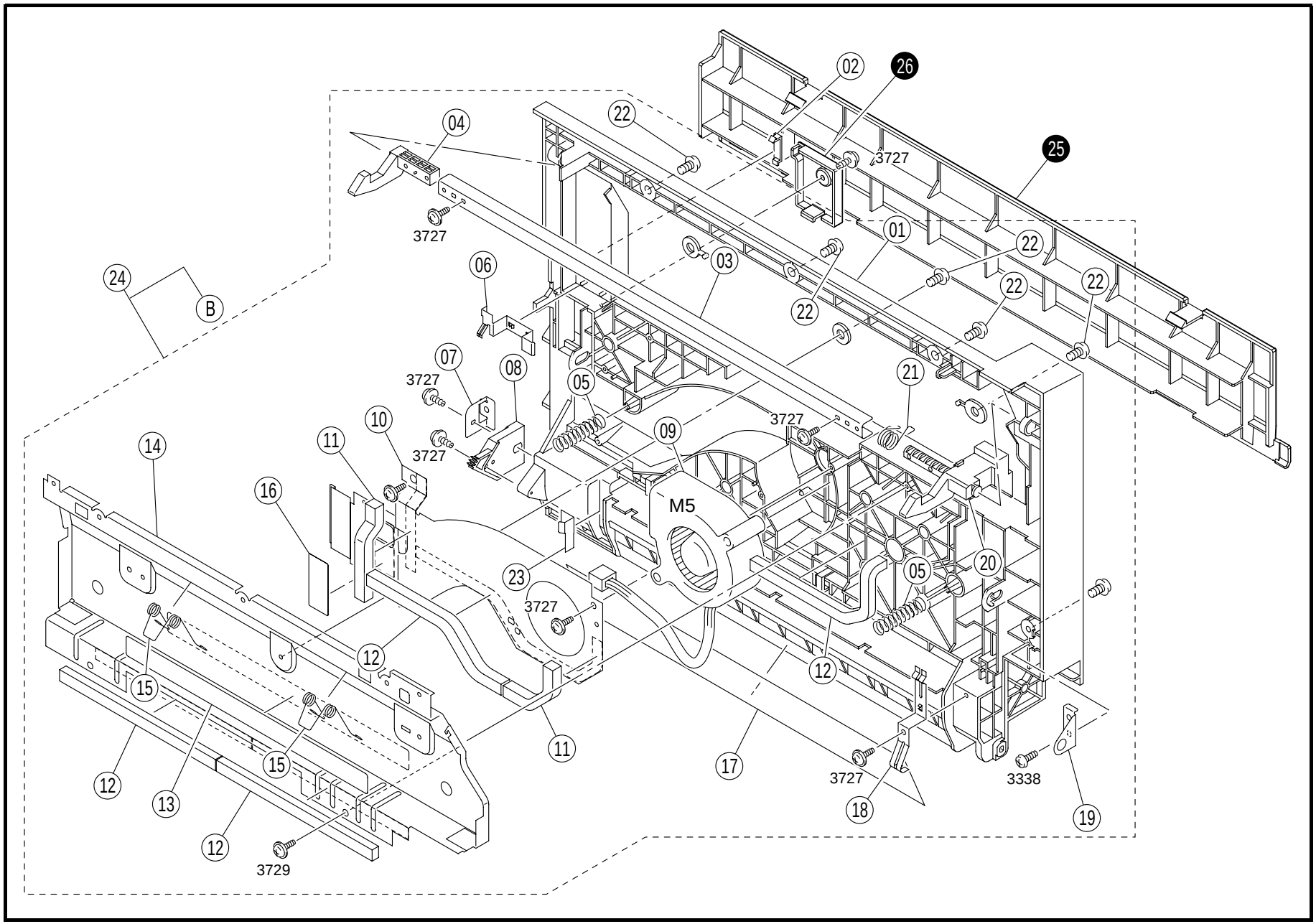
02
26
25
04
22
3727
01
22
22
22
22
03
06
24
B
07
08
05
21
3727
3727
10
11
09
3727
14
16
M5
23
05
20
3727
12
12
15
15
11
17
3727
3338
12
13
18
19
12
3729

INDEX	PART NO.		PART NAME	REC	QTY
01	4030-3502-03		RIGHT COVER		1
02	4030-1033-01		COVER		1
03	4030-2023-01	NS	BRACKET		1
04	4030-2022-01		PAWL		1
05	4011-3515-01		PRESSURE SPRING		2
06	4030-2024-02		EARTH GROUND		1
07	4030-2033-01		PLATE NUT		1
08	4030-2548-01		GEAR		1
09	9313-1100-31		FAN MOTOR COOLING (M5)		1
10	4030-3517-01	NS	BRACKET		1
11	4030-3518-01		SEAL		2
12	4030-3520-01		SEAL		4
13	4021-7310-01		LABEL		1
14	4030-2025-01	NS	REINFORCE PLATE		1
15	4030-2052-02		TORSION SPRING		2
16	4030-3527-01		INSULATING MEMBER		1
17	4012-3524-01		GUIDE		1
18	1164-4219-02		TERMINAL		1
19	4011-2024-01	NS	BRACKET		1
20	4030-2021-02		PAWL		1
21	4030-2013-01		TORSION SPRING		1
22	4002-2581-01		SCREW		4
23	4011-3508-01		GUIDE		1
24	4030-0760-00		PAPER TRANSPORT UNIT		1

INDEX	PART NO.	PART NAME	REC	QTY	SFIX
25	4030-3503-01	LID		1	011
26	4030-3521-01	LID		1	011

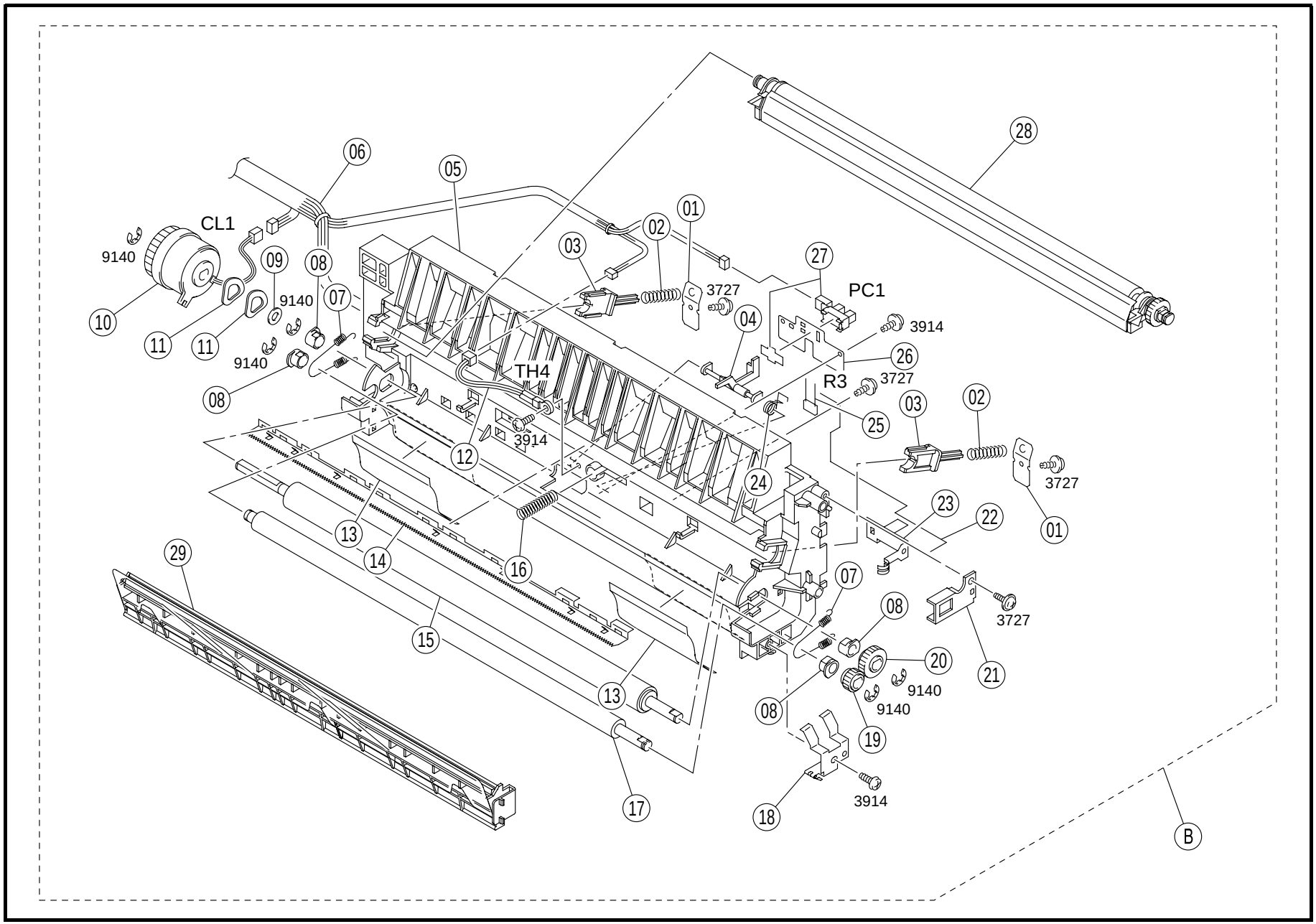
CL1
9140
9140
9140
TH4
3914
3727
PC1
3914
R3
3727
3727
3727
3914
9140
9140
01
02
03
04
05
06
07
08
09
10
11
11
12
13
14
15
16
17
18
19
20
21
22
23
24
25
26
27
28
29
B

INDEX	PART NO.		PART NAME			REC	QTY
01	1164-4209-02		CONTACT				2
02	4030-4207-01		PRESSURE SPRING				2
03	1164-4206-02		BUSHING				2
04	4030-3504-01		ACTUATOR				1
05	4030-3501-04	NS	HOLDER				1
06	4030-6809-01	NS	WIRE HARNESS ASSY				1
07	1164-3513-01		TENSION SPRING				2
08	1164-3549-01		BUSHING			RP	4
09	4011-3512-01		WASHER				1
10	9322-1000-81		CLUTCH	SYNCH	(CL1)		1
11	4011-3020-01		WASHER				2
12	9372-2710-21		THERMISTOR	DRUM	(TH4)		1
13	4030-3505-01		GUIDE				2
14	1164-4202-04	NS	NEUTRALIZING NEEDLE				1
15	4011-3510-01		ROLLER				1
16	4030-4213-02		PRESSURE SPRING				1
17	4011-3509-01		ROLLER				1
18	1164-3514-02		EARTH GROUND				1
19	1164-3515-01		GEAR			RP	1
20	1164-3508-01		GEAR			RP	1
21	1164-4218-01		HOLDER				1
22	4030-4220-01		CONTACT				1
23	4011-4217-01		CONTACT				1
24	1164-3527-02		TORSION SPRING				1
25	9455-3078-01		RESISTOR	TRANSFER	(R3)		1
26	1164-3529-01		BRACKET				1
27	4131-0902-01		PHOTO INTERRUPTER	TIMING	(PC1)		1
28	4030-0751-00		TRANSFER ROLLER ASSY			RP	1
29	1165-0756-01		CLEANING PAD ASSY			RP	1

INDEX	PART NO.	PART NAME	REC	QTY	SFIX

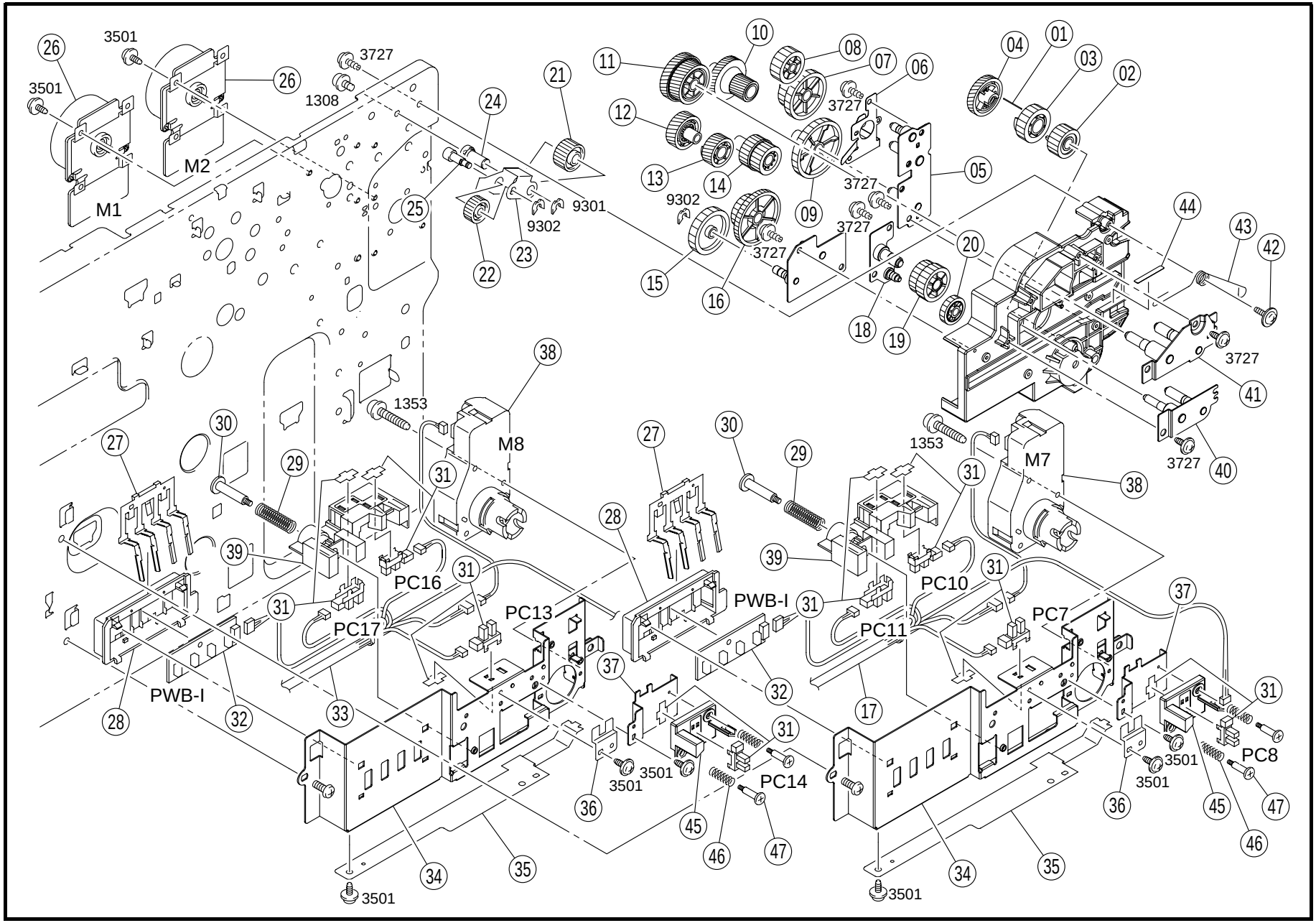
M1
M2
M7
M8
PC7
PC8
PC10
PC11
PC13
PC14
PC16
PC17
PWB-I
PWB-I
3501
3727
1308
1353
9301
9302

INDEX	PART NO.		PART NAME	REC	QTY
01	4030-2547-02		SPRING		1
02	4030-2545-01		GEAR		1
03	4030-2544-01		GEAR		1
04	4030-2546-01		GEAR		1
05	4030-0210-01	NS	BRACKET ASSY		1
06	4030-2530-01		PLATE SPRING		1
07	4030-2515-01		GEAR		1
08	4030-2516-01		GEAR		1
09	4030-2514-01		GEAR		1
10	4030-2506-01		GEAR		1
11	4030-2505-01		GEAR		1
12	4030-2510-01		GEAR		1
13	4030-2511-01		GEAR		1
14	4030-2512-01		GEAR		1
15	1165-2592-01		GEAR		1
16	4030-2542-01		GEAR		1
17	4030-6813-02	NS	WIRE HARNESS ASSY		1
18	4030-0211-01	NS	BRACKET ASSY		1
19	4030-2526-01		GEAR		1
20	4030-2535-01		GEAR		1
21	4030-2517-01		GEAR		1
22	4030-2518-01		GEAR		1
23	4030-2525-01	NS	BRACKET		1
24	4030-2523-01	NS	SHAFT		1
25	4030-2524-01	NS	SHAFT		1
26	9314-2100-41		MOTOR (M1.2)		2
27	1164-3020-03		LEVER		2
28	4011-3012-01		HOLDER		2
29	4002-3110-01		PRESSURE SPRING		2
30	4002-3131-01		SHOULDER SCREW		2
31	4131-0902-01		PHOTO INTERRUPTER (PC7.8.10-17)		8
32	4011-0111-01		PWB ASSY SIZE (PWB-I)	RP	2
33	4030-6810-02	NS	WIRE HARNESS ASSY		1
34	4030-3046-03	NS	BRACKET		2
35	4030-3049-01	NS	BRACKET		2
36	4030-3048-02	NS	BRACKET		2
37	4030-3208-02	NS	BRACKET		2
38	9312-1200-31		MOTOR (M7.8)		2
39	4030-3047-02		HOLDER		2
40	4030-0209-01	NS	BRACKET ASSY		1
41	4030-0208-01	NS	BRACKET ASSY		1
42	4163-5293-01		SCREW		1
43	4030-2531-01		SPRING		1
44	4030-7316-01		LABEL		1
45	4030-3083-01		HOLDER		2
46	4030-3081-01		PRESSURE SPRING		4
47	4030-3224-01		SHOULDER SCREW		4

INDEX	PART NO.	PART NAME	REC	QTY	SFIX

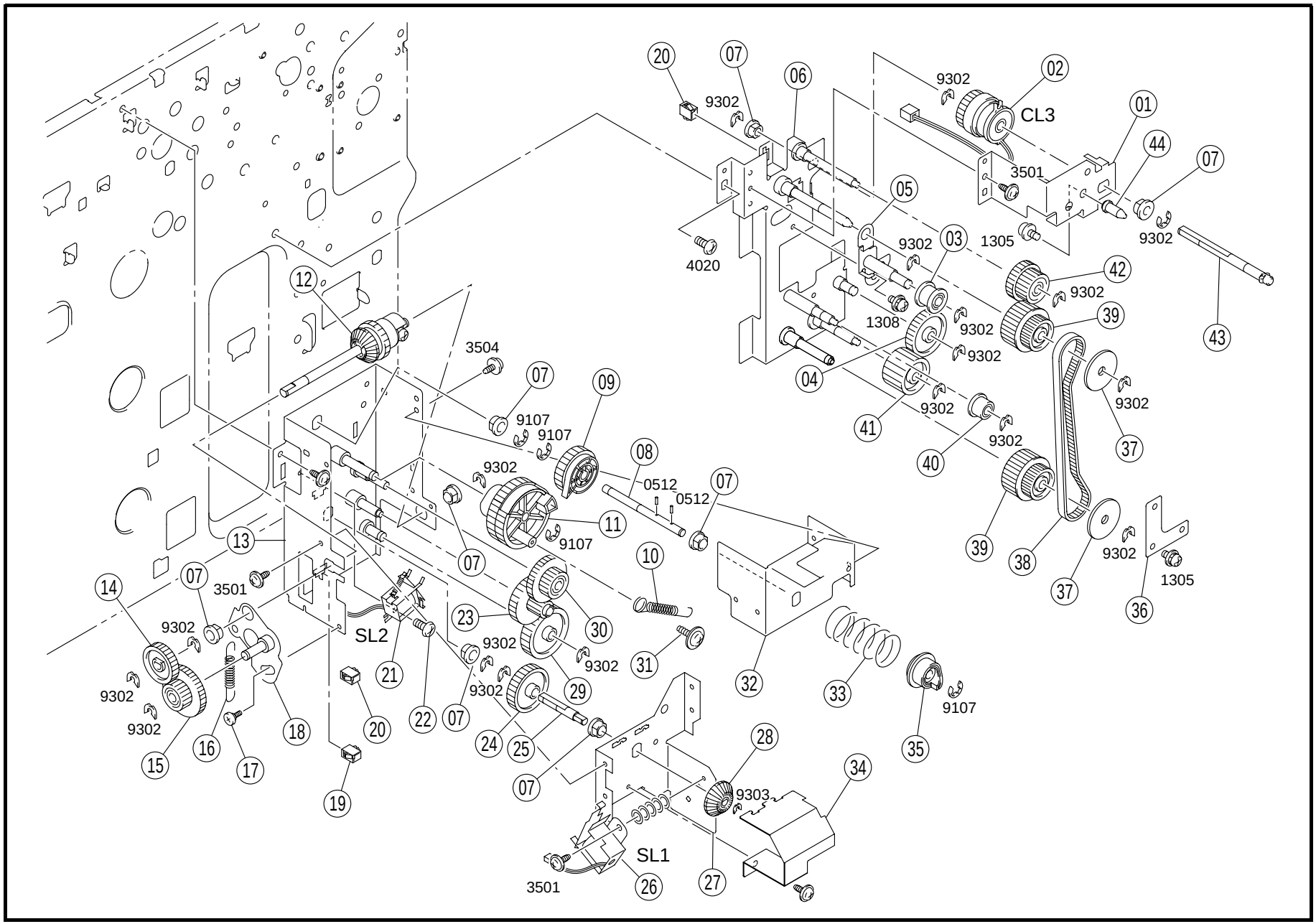
20
07
06
9302
02
CL3
01
44
07
3501
05
9302
03
1305
9302
4020
42
9302
39
1308
9302
9302
43
04
9302
41
9302
40
9302
37
39
38
9302
37
1305
36
12
3504
07
09
9107
9107
08
9302
0512
0512
07
11
9107
13
07
10
14
07
3501
23
30
9302
SL2
9302
9302
31
21
9302
29
9302
9302
32
33
9107
35
15
16
17
18
20
22
07
24
25
28
34
19
07
9303
SL1
3501
26
27

INDEX	PART NO.		PART NAME	REC	QTY
01	4030-3051-01	NS	BRACKET		1
02	9322-1200-21		CLUTCH TAKE-UP1 (CL3)		1
03	1155-2518-01		PULLEY		1
04	4030-3060-01		GEAR		1
05	4030-0201-01	NS	BRACKET ASSY		1
06	4030-0202-01	NS	BRACKET ASSY		1
07	4131-3003-01		BUSHING		8
08	4030-5372-01	NS	SHAFT		1
09	4030-5369-02		GEAR		1
10	4030-5373-01		TENSION SPRING		1
11	4030-5368-02		GEAR		1
12	4030-0154-03		GEAR ASSY		1
13	4030-0214-02	NS	BRACKET ASSY		1
14	4030-5334-01		GEAR		1
15	4030-5328-01		GEAR		1
16	4030-5324-01		TENSION SPRING		1
17	4030-5377-01		SHOULDER SCREW		1
18	4030-0215-01	NS	BRACKET ASSY		1
19	9383-2210-21		CONNECTOR 2P		1
20	9383-2210-11		CONNECTOR 2P		2
21	9321-2100-41		SOLENOID TONER (SL2)		1
22	4683-2137-01		SCREW		1
23	4030-5376-01		GEAR		1
24	4030-5370-01		GEAR		1
25	4030-5371-01	NS	SHAFT		1
26	9321-2200-62		SOLENOID TONER (SL1)		1
27	4030-5329-02	NS	BRACKET		1
28	1165-5311-01		GEAR		1
29	1165-2592-01		GEAR		1
30	4030-5367-01		GEAR		1
31	4163-5293-01		SCREW		1
32	4030-5355-02	NS	BRACKET		1
33	4030-5374-01		PRESSURE SPRING		1
34	4030-5331-01	NS	COVER		1
35	4030-5330-01		JOINT		1
36	4030-3052-01	NS	BRACKET		1
37	4030-3055-01		COLLAR		2
38	4030-3054-01		TIMING BELT		1
39	4030-3053-01		PULLEY		2
40	1067-2513-01		PULLEY		1
41	4030-3059-01		GEAR		1
42	4030-3071-01		GEAR		1
43	4030-3057-01	NS	SHAFT		1
44	4030-3067-01	NS	SHAFT		1

INDEX	PART NO.	PART NAME	REC	QTY	SFIX

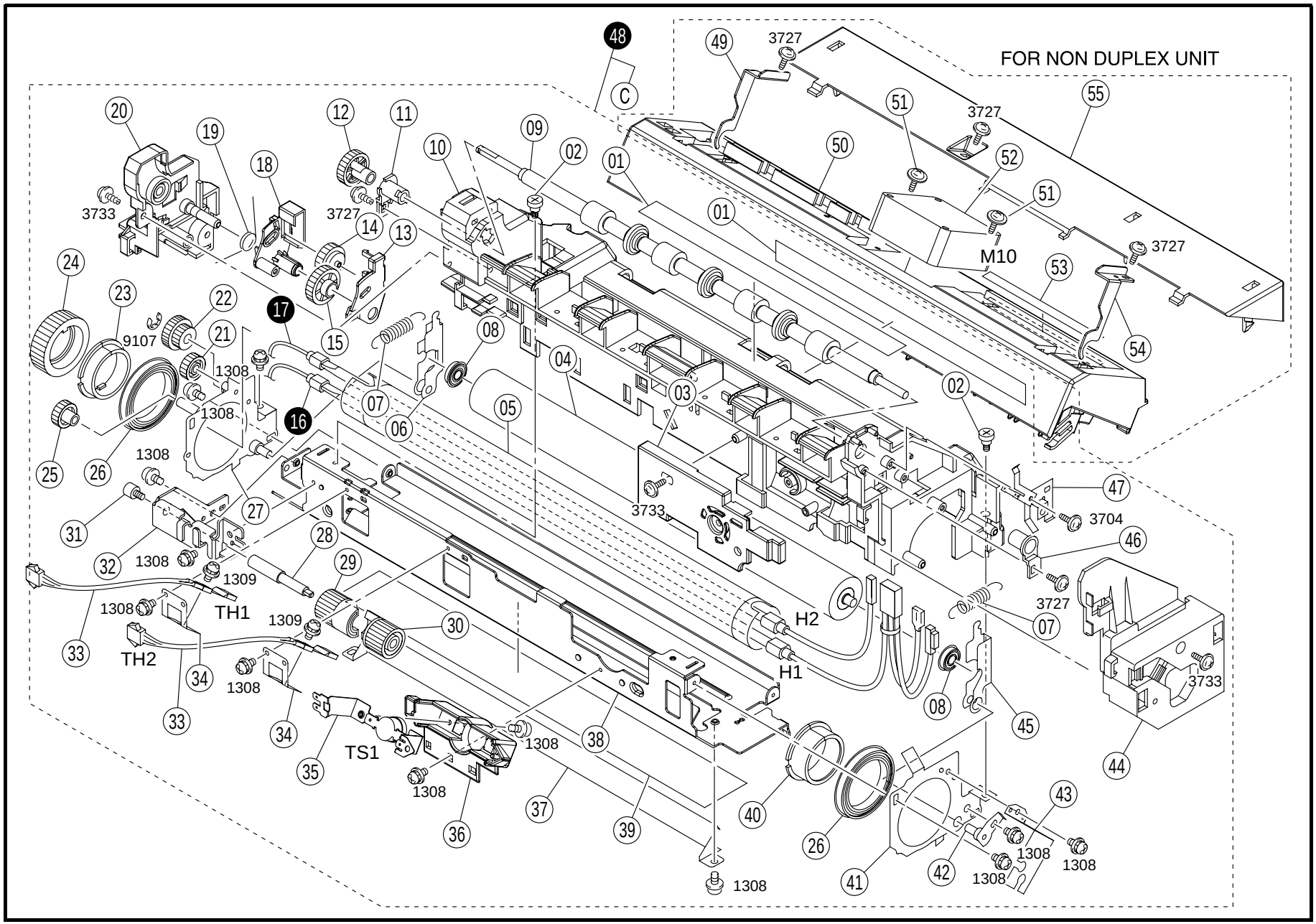
FOR NON DUPLEX UNIT
M10
TH1
TH2
TS1
H1
H2
3727
3733
3704
9107
1308
1309

INDEX	PART NO.		PART NAME	REC	QTY
01	4021-7310-01		LABEL		2
02	4030-5827-01		SHOULDER SCREW		2
03	4030-5852-01		COVER		1
04	4030-5702-02		ROLLER		1
05	4030-5701-03		ROLLER		1
06	4030-5732-01		LEVER		1
07	4030-5712-02		TENSION SPRING		2
08	4011-5758-02		BALL BEARING		2
09	4030-5802-01		ROLLER		1
10	4030-5801-03	NS	FRAME		1
11	4030-5840-02		BUSHING		1
12	4030-5812-01		GEAR		1
13	4030-5822-03		HOLDER		1
14	4030-5817-02		GEAR		1
15	4030-5816-01		GEAR		1
18	4030-5820-03		HOLDER		1
19	4030-5821-02		TORSION SPRING		1
20	4030-5727-02		COVER		1
21	4030-5814-01		GEAR		1
22	4030-5815-01		GEAR		1
23	4030-5741-02		BUSHING		1
24	4030-5703-02		GEAR		1
25	4030-5830-01		GEAR		1
26	4011-5762-01		BALL BEARING		2
27	4030-0217-01	NS	BRACKET ASSY		1
28	4030-5729-01	NS	SHAFT		1

INDEX	PART NO.		PART NAME	REC	QTY
29	4030-5728-01		GEAR		1
30	4030-5730-01		GEAR		1
31	4030-5739-01		SHOULDER SCREW		1
32	4030-5733-02	NS	BRACKET		1
33	9372-2200-51		THERMISTOR FUSING (TH1.2)		2
34	4030-5743-01	NS	HOLDER		2
35	9334-1300-11		THERMAL SWITCH FUSING (TS1)		1
36	4030-5706-02		HOLDER		1
37	4030-5713-02	NS	GUIDE PLATE		1
38	4030-5710-03	NS	BRACKET		1
39	4030-5705-01		THERMAL INSULATOR		1
40	4030-5740-02		BUSHING		1
41	4030-5711-01	NS	FRAME		1
42	4030-0218-01	NS	BRACKET ASSY		1
43	4030-5749-01		HOLDER		1
44	4030-5726-03		COVER		1
45	4030-5708-01		LEVER		1
46	4030-5842-01		BUSHING		1
47	4030-5714-01		EARTH GROUND		1
49	4030-5850-01		STOP PLATE		1
50	4030-5832-02		COVER		1
51	4109-2003-01		SHOULDER SCREW		2
52	9313-1100-51		FAN MOTOR FUSING (M10)		1
53	4030-7341-01		LABEL		1
54	4030-5851-01		STOP PLATE		1
55	4030-5838-01		DUCT		1

INDEX	PART NO.	PART NAME	REC	QTY	SFIX
16	9352-2200-63	HEATER FUSING (H1)		1	001, 011
16	9352-2200-73	HEATER FUSING (H1)		1	301, 303, 304, 307, 311, 313, 314
16	9352-2200-83	HEATER FUSING (H1)		1	201, 202, 211, 212, 214, 216
17	9352-2200-92	HEATER FUSING (H2)		1	001, 011
17	9352-2201-02	HEATER FUSING (H2)		1	301, 303, 304, 307, 311, 313, 314
17	9352-2201-12	HEATER FUSING (H1)		1	201, 202, 211, 212, 214, 216
48	4030-0755-00	FUSING UNIT	RP	1	001, 011
48	4030-0756-00	FUSING UNIT	RP	1	301, 303, 304, 307, 311, 313, 314
48	4030-0757-00	FUSING UNIT	RP	1	201, 202, 211, 212, 214, 216

21 FUSING SECTION (B)

Di3510/Di3510f

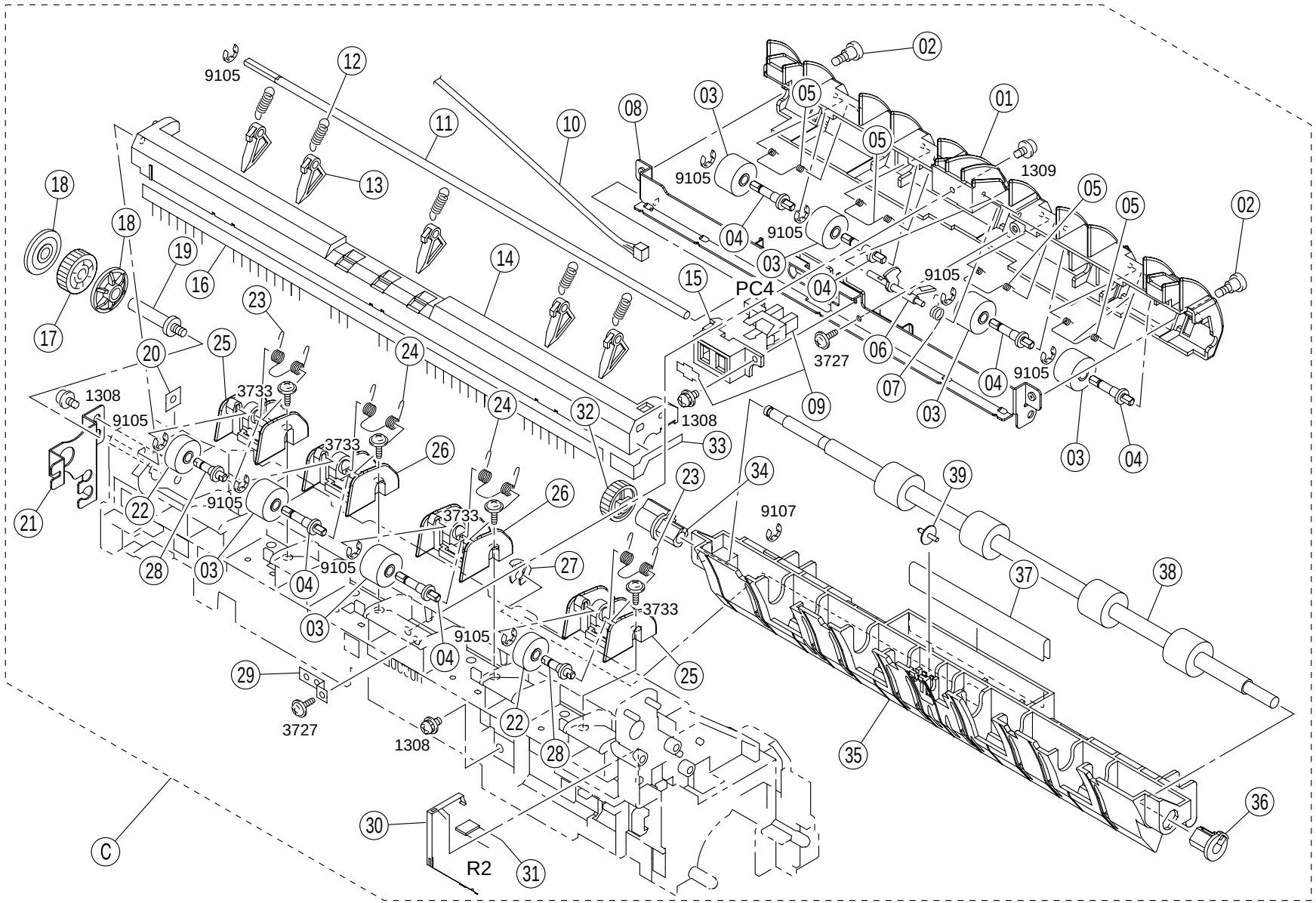

INDEX	PART NO.		PART NAME	REC	QTY
01	4030-5752-03		GUIDE		1
02	4030-5827-01		SHOULDER SCREW		2
03	4030-5805-03		ROLL		6
04	4030-5856-01	NS	SHAFT		6
05	4030-5807-01		TORSION SPRING		4
06	4030-5809-02		ACTUATOR		1
07	4030-5810-02		TORSION SPRING		1
08	4030-5750-03	NS	BRACKET		1
09	4131-0902-01		PHOTO INTERRUPTER EXIT (PC4)		1
10	4030-6817-01	NS	WIRE HARNESS ASSY		1
11	4030-5753-01	NS	SHAFT		1
12	4030-5717-01		TENSION SPRING		5
13	4030-5716-02		SEPARATOR		5
14	4030-5839-03		HOLDER		1
15	4030-5808-02		HOLDER		1
16	4030-5823-01		NEUTRALIZING BRUSH		1
17	4030-5836-01		GEAR		1
18	4030-5844-02		COLLAR		2
19	4030-5845-02	NS	SHOULDER SCREW		1
20	4030-5751-01		PLATE NUT		1

INDEX	PART NO.		PART NAME	REC	QTY
21	4030-5721-02		HOLDER		1
22	4030-5854-01		ROLL		2
23	4030-5858-01		TORSION SPRING		2
24	4030-5806-01		TORSION SPRING		2
25	4030-5855-01		HOLDER		2
26	4030-5843-02		HOLDER		2
27	1164-3065-01		STOPPER RING		1
28	4030-5857-01	NS	SHAFT		2
29	4030-5848-01	NS	POSITIONING PLATE		1
30	4030-5715-01		EARTH GROUND		1
31	9455-1078-01		RESISTOR FUSING (R2)		1
32	4030-5813-01		GEAR		1
33	4030-5847-01		NETURALIZING MEMBER		1
34	4030-5811-01		BUSHING		1
35	4030-5825-02		GUIDE		1
36	4030-5834-01		BUSHING		1
37	4030-7340-01		PROTECTION		1
38	4030-5803-01		ROLLER		1
39	4030-5841-01		ROLL		1

INDEX	PART NO.	PART NAME	REC	QTY	SFIX

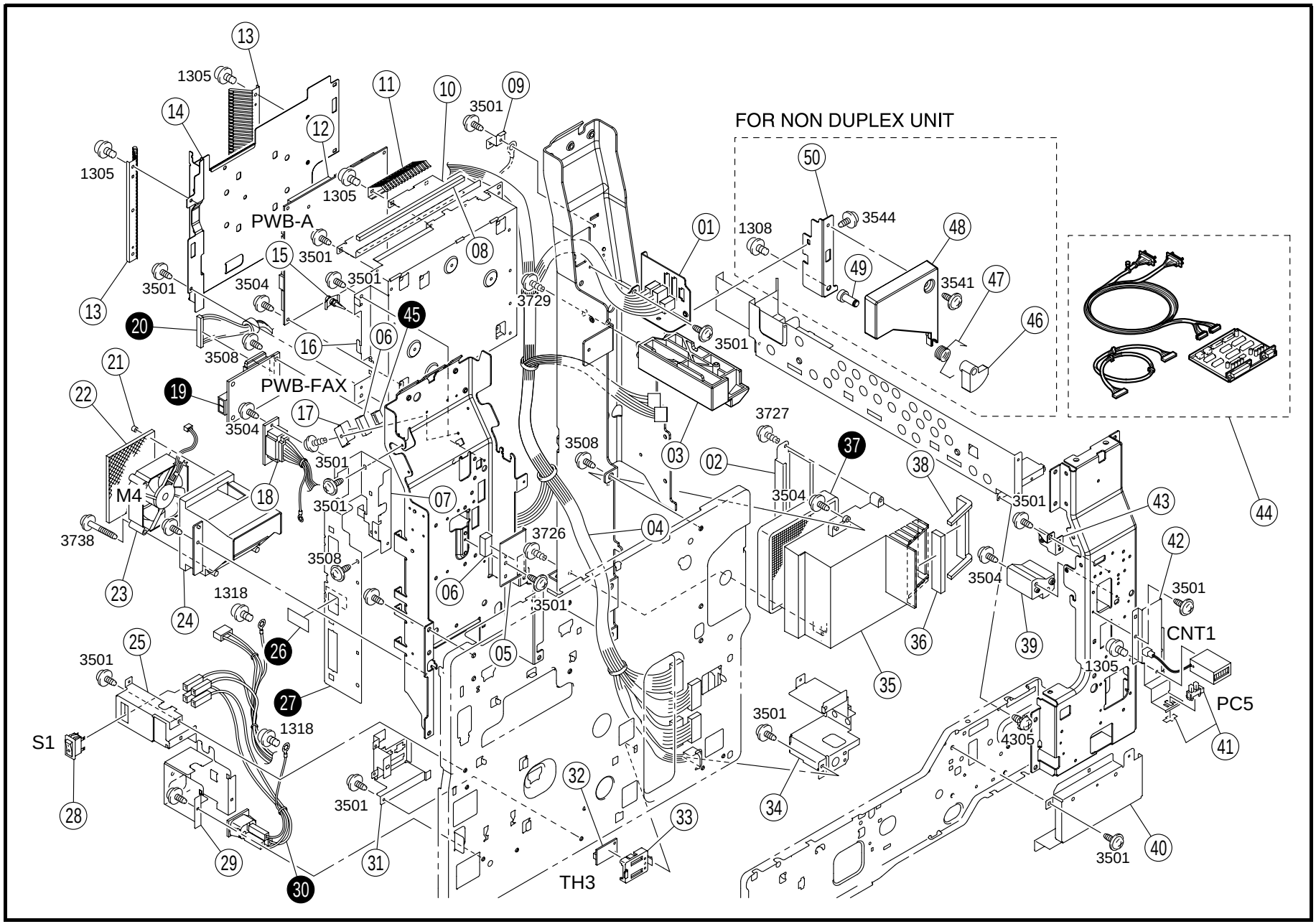
FOR NON DUPLEX UNIT
PWB-A
PWB-FAX
M4
S1
TH3
CNT1
PC5
1305
3501
3504
3508
3729
3727
3726
3738
1318
3544
1308
3541
4305

INDEX	PART NO.		PART NAME			REC	QTY
01	4030-2307-01	NS	BRACKET				1
02	4030-3522-01	NS	GUIDE				1
03	4030-2306-02		HOLDER				1
04	4030-6808-02	NS	WIRE HARNESS ASSY				1
05	4030-2106-01	NS	SHIELD				1
06	4030-6757-01		ELECTRICALLY CONDUCTIVE				2
07	4030-2135-01	NS	BRACKET				1
08	1155-6216-01		SHIELD				1
09	4030-2312-01	NS	BRACKET				1
10	4030-2159-02	NS	BRACKET				1
11	4030-2160-02		EARTH GROUND				1
12	4030-0110-02		PWB ASSY	MAIN	(PWB-A)	RP	1
13	4030-2161-01		EARTH GROUND				2
14	4030-2111-03	NS	SHIELD				1
15	9384-1621-21		PWB SUPPORT 6.4H				4
16	4030-2110-01	NS	BRACKET				1
17	4030-2119-01	NS	SHIELD				1
18	4030-6815-01	NS	WIRE HARNESS ASSY				1
21	4658-3047-01		COLLAR				2
22	4030-2107-01		FILTER				1
23	9313-1100-41		FAN MOTOR	PU COOL	(M4)		1
24	4030-2108-01	NS	DUCT				1
25	4030-2150-01	NS	BRACKET				1
28	0990-6304-02		SWITCH	MAIN	(S1)		1
29	4030-2131-02	NS	BRACKET				1
31	4030-2133-01	NS	BRACKET				1
32	9372-5100-12		HUMIDITY CONVERTION EL.	TEMP	(TH3)		1
33	4030-2103-01		HOLDER				1
34	4030-2039-02	NS	BRACKET				1
35	4030-3519-01		DUCT				1
36	4030-3524-01		CUSHION				1
38	4030-3523-02		CUSHION				1
39	4030-2305-01		HOLDER				1
40	4030-2060-02	NS	BRACKET				1
41	4131-0902-01		PHOTO INTERRUPTER	DOOR SET	(PC5)		1
42	4030-2122-01	NS	BRACKET				1
43	4030-2304-01	NS	BRACKET				1
44	4030-0901-01		JIG FW UP-DATE PWB KIT				1
46	4030-2313-01		STOPPER				1
47	4030-2315-01		TORSION SPRING				1
48	4030-1021-02		RIGHT COVER				1
49	4030-2314-01	NS	SHAFT				1
50	4030-2316-01	NS	BRACKET				1

INDEX	PART NO.	PART NAME		REC	QTY	SFIX
19	4384-1004-01	PWB ASSY PKG	(PWB-FAX)	RP	1	001
19	4384-1100-01	PWB ASSY PKG	(PWB-FAX)	RP	1	301, 307
19	4384-1101-01	PWB ASSY PKG	(PWB-FAX)	RP	1	201, 202, 303, 304
20	4384-1005-01	WIRE HARNESS ASSY			1	001, 201, 202, 301, 303, 304, 307
26	4011-2148-01	LABEL			1	001, 201, 202, 301, 303, 304, 307
27	4030-2125-01 NS	BRACKET			1	001, 301, 303, 304, 307
27	4030-2126-01 NS	BRACKET			1	201, 202
27	4030-2127-02 NS	BRACKET			1	011, 211, 212, 214, 216, 311, 313, 314
30	4030-6851-02 NS	WIRE HARNESS ASSY			1	001, 011
30	4030-6852-02 NS	WIRE HARNESS ASSY			1	201, 202, 211, 212, 214, 216, 301, 303, 304, 307, 311, 313, 314
37	4011-2031-01	FILTER		RP	1	202, 212, 214, 216, 301, 303, 304, 307, 311, 313, 314
37	4011-2032-01	FILTER		RP	1	001, 011, 201, 211
45	9326-1000-51	FERRITE CORE			1	201, 202, 211, 212, 216, 303, 313

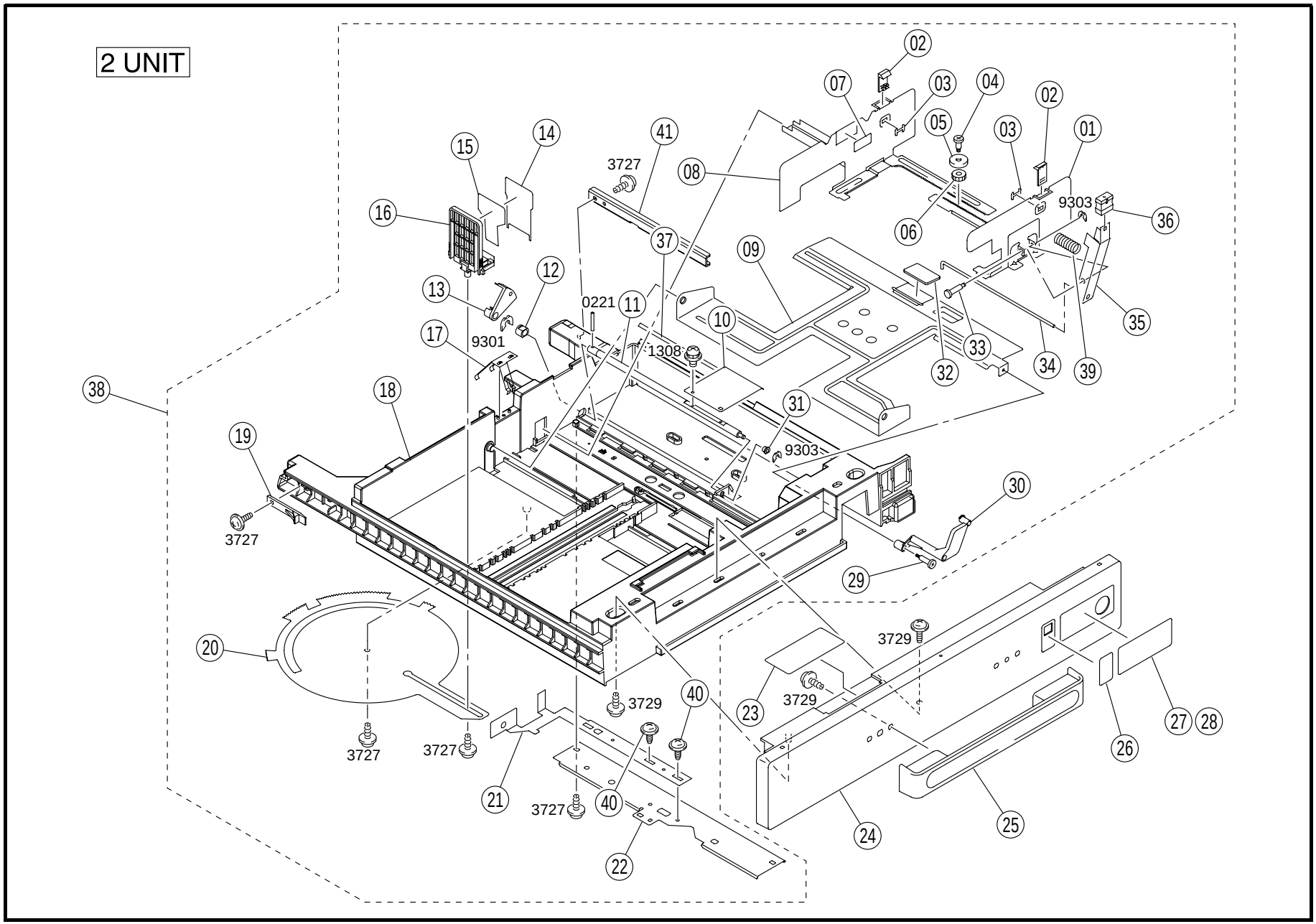
2 UNIT
02
07
03
04
02
05
03
01
14
15
41
3727
08
9303
36
16
37
06
09
12
13
0221
11
10
35
17
9301
1308
33
34
39
32
38
18
31
9303
19
30
3727
29
20
3729
3729
40
23
3729
27
28
26
3727
3727
21
40
3727
24
25
22

INDEX	PART NO.		PART NAME	REC	QTY	INDEX	PART NO.		PART NAME	REC	QTY
01	4030-3211-02	NS	REGULATING PLATE		2	22	4030-3218-01		BRACKET		2
02	4658-3048-01		GUIDE		4	23	4030-7304-02		LABEL		2
03	4658-3049-01		STOPPER		4	24	4030-3202-02		COVER		2
04	4030-3214-01		SHOULDER SCREW		2	25	4030-3225-01		HANDLE		2
05	4030-3215-01		GUIDE		2	26	4030-7301-02		LABEL		2
06	4658-3012-01		GEAR		2	27	4030-7302-02		LABEL		1
07	4002-7306-01		LABEL		2	28	4030-7303-02		LABEL		1
08	4030-3212-01	NS	REGULATING PLATE		2	29	4030-3224-01		SHOULDER SCREW		2
09	4030-3203-01	NS	LIFTING PLATE		2	30	4030-3221-01		LEVER		2
10	4030-3206-01	NS	LEVER		2	31	0992-3014-01		BUSHING		2
11	4030-3205-01	NS	SHAFT		2	32	4030-3226-01		FRICTION SHEET		2
12	1274-3603-01		BUSHING		2	33	4498-3826-01		SHAFT		2
13	4030-3207-01		ACTUATOR		2	34	4030-3217-01	NS	SHAFT		2
14	4030-3228-01		GUIDE		2	35	4128-3823-01		LEVER		2
15	4030-3227-01		GUIDE		2	36	4498-3804-01		KNOB		2
16	4030-3213-01		REGULATING PLATE		2	37	4030-3222-01		GUIDE		2
17	4030-3223-02		EARTH GROUND		2	38	4030-0155-05		CASSETTE ASSY		2
18	4030-3201-03	NS	CASSETTE		2	39	4498-3825-01		PRESSURE SPRING		2
19	4498-3469-01		STOPPER		2	40	4498-3834-01		SCREW		4
20	4002-3108-01	NS	LEVER		2	41	4030-3229-02	NS	REINFORCE PLATE		2
21	4030-3216-01	NS	BRACKET		2						

INDEX	PART NO.	PART NAME	REC	QTY	SFIX

24 WIRING ACCESSORIES AND JIGS

Di3510/Di3510f

⑴ 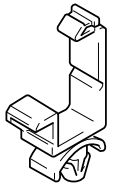	⑹ 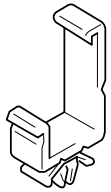	⑬ 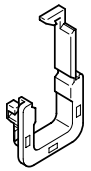	⑱ 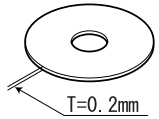				
⑵ 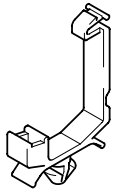	⑺-⑼ 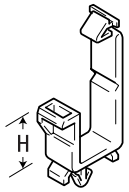	⑭ 					
⑶ 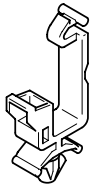	⑽ 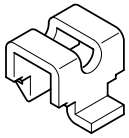	⑮ 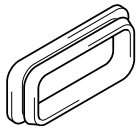					
⑷ 	⑾ 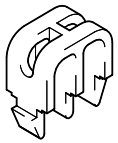	⑯ 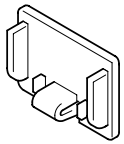					
⑸ 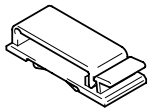	⑿ 	⑰ 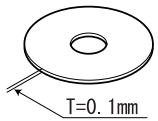					

INDEX	PART NO.	PART NAME	REC	QTY	INDEX	PART NO.	PART NAME	REC	QTY
01	9384-1000-51	WIRING SADDLE		23					
02	9384-1100-11	WIRING SADDLE		1					
03	9384-1100-91	WIRING SADDLE		68					
04	9384-1110-61	WIRING SADDLE 21.5H		3					
05	9384-1300-11	RETAINER		1					
06	9384-1310-91	WIRING SADDLE 18.5H		1					
07	9384-1921-01	WIRING SADDLE 14.4H		18					
08	9384-1921-11	WIRING SADDLE 9.2H		2					
09	9384-1921-31	WIRING SADDLE 17.3H		8					
10	4011-5788-01	CORD CLAMP		3					
11	4030-5853-01	CORD CLAMP		4					
12	9384-2010-21	EDGE COVER 8.5H		16					
13	9384-2910-31	EDGE COVER		12					
14	9384-1311-11	CABLE TIE 104L		9					
15	1050-4805-01	INSULATING MEMBER		2					
16	9384-2910-11	CN COVER		1					
17	4030-2053-01	SPACER T=0.1MM		1					
18	4030-2054-01	SPACER T=0.2MM		1					

INDEX	PART NO.	PART NAME	REC	QTY	SFIX

INDEX	PART NO.	PART NAME	ILLUST
0221	9754-3025-08	SPRING ROLL PIN	
0512	9752-2008-50	PIN	
1115	9642-0308-13	SCREW	
1210 1285	9644-0308-13 9644-0304-21	SCREW	
1304 1305 1308 1309 1311 1312 1318 1349 1352 1353 1356	9646-0306-07 9646-0306-13 9646-0308-13 9646-0310-13 9646-0314-13 9646-0316-13 9646-0408-13 9646-0306-01 9646-0304-13 9646-0330-13 9646-0308-01	SCREW	
1409 1460	9648-0308-21 9648-0306-21	SCREW	
1517	9652-0306-07	SCREW	
1608 1634 1655	9654-0308-01 9654-0304-13 9654-0304-01	SCREW	
1723	9737-0308-13	SCREW	
2706 2719	9654-0408-14 9654-0308-14	SCREW	

INDEX	PART NO.	PART NAME	ILLUST
3211	9657-0314-07	TAPPING SCREW	
3303 3305 3338 3340	9732-0306-13 9732-0308-13 9732-0308-14 9732-0310-14	TAPPING SCREW	
3405	9733-0310-13	TAPPING SCREW	
3501 3504 3508 3512 3520 3523 3530 3538 3541 3543 3544 3546 3547 3548	9735-0306-13 9735-0308-13 9735-0408-13 9735-0306-07 9735-0314-13 9735-0416-13 9735-0312-07 9735-0408-14 9735-0308-14 9735-0310-14 9735-0306-14 4106-2063-01 4154-3804-01 9735-0330-13	TAPPING SCREW	
3701 3703 3704 3726 3727 3729 3730 3733 3738	9739-0408-13 9739-0412-13 9739-0308-13 9739-0408-14 9739-0308-14 9739-0410-14 9739-0306-14 9739-0310-14 9739-0330-14	TAPPING SCREW	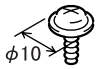
3907 3914	9742-0308-13 9742-0308-07	TAPPING SCREW	

INDEX	PART NO.	PART NAME	ILLUST
4011 4012 4020 4021 4025	9743-0308-13 9743-0306-13 9743-0408-14 9743-0308-14 9743-0306-14	TAPPING SCREW	
4305	9770-0408-13	TAPPING SCREW	
4601	9747-1740-07	TAPPING SCREW	
7101	9684-0303-08	SET SCREW	
8301	9712-0300-13	WASHER	
8501 8510	9716-0300-01 9716-0600-01	WASHER	
9105 9107 9109 9115 9140	9721-0300-01 9721-0400-01 9721-0500-01 9721-0800-01 9721-0500-13	RETAINING RING	
9301 9302 9303	1066-1151-01 4425-3001-01 4425-3002-01	RETAINING RING	

PART NO.	FIG.	INDEX	QTY		PART NO.	FIG.	INDEX	QTY		PART NO.	FIG.	INDEX	QTY		PART NO.	FIG.	INDEX	QTY	
0866-7801-01	06	31	1		1165-4310-01	14	51	1		4030-0202-01	19	06	1		4030-1501-02	01	21	1	
0990-6304-02	22	28	1		1165-5308-01	14	35	1		4030-0203-03	10	10	1		4030-1502-01	01	22	1	
0992-3014-01	23	31	2		1165-5309-02	14	34	1		4030-0204-01	12	15	1		4030-1503-02	01	17	1	
1033-4402-01	02	19	1		1165-5311-01	19	28	1		4030-0205-01	12	32	1		4030-1504-02	01	07	1	
1050-4805-01	24	15	2		1165-5319-01	14	52	1		4030-0208-01	18	41	1		4030-1505-03	01	01	1	
1052-4412-01	09	26	1		1165-5325-01	14	04	3		4030-0209-01	18	40	1		4030-1506-01	01	08	1	
1065-3086-01	09	22	1		1165-5327-03	14	03	1		4030-0210-01	18	05	1		4030-1507-01	01	04	1	
1065-3086-01	10	23	1		1165-6832-01	07	28	1		4030-0211-01	18	18	1		4030-1508-02	01	02	1	
1067-2501-01	09	24	2		1171-0903-02	15	13	1		4030-0214-02	19	13	1		4030-1509-01	01	06	1	
1067-2501-01	10	11	2		1171-1125-02	01	10	1		4030-0215-01	19	18	1		4030-1510-01	01	03	1	
1067-2502-01	12	09	2		1171-1126-01	01	09	1		4030-0216-03	13	24	1		4030-1511-01	01	15	1	
1067-2513-01	19	40	1		1171-1321-01	03	14	6		4030-0217-01	20	27	1		4030-1515-01	01	20	1	
1070-3072-01	09	25	1		1200-1342-03	10	39	1		4030-0218-01	20	42	1		4030-2004-01	06	19	1	
1075-0130-02	13	23	1		1200-2105-05	10	33	1		4030-0751-00	17	28	1		4030-2005-02	07	25	1	
1075-2565-01	12	34	1		1200-5212-04	10	25	1		4030-0752-00	12	55	1		4030-2006-01	07	24	1	
1079-2219-01	07	20	2		1274-2611-01	12	21	3		4030-0753-00	12	55	1		4030-2007-01	07	29	1	
1129-7303-01	07	22	1		1274-3603-01	23	12	2		4030-0754-00	12	55	1		4030-2008-02	07	27	1	
1129-7303-01	08	24	1		1300-3322-17	12	31	1		4030-0755-00	20	48	1		4030-2009-01	07	16	2	
1131-7802-01	06	29	1		4002-2581-01	16	22	4		4030-0756-00	20	48	1		4030-2010-01	07	04	1	
1131-7802-01	06	30	1		4002-3108-01	23	20	2		4030-0757-00	20	48	1		4030-2011-01	07	06	1	
1134-3042-01	08	04	1		4002-3110-01	18	29	2		4030-0758-00	14	57	1		4030-2012-01	07	21	1	
1134-3042-01	13	05	4		4002-3123-01	07	31	2		4030-0760-00	16	24	1		4030-2013-01	16	21	1	
1139-1703-02	01	11	3		4002-3131-01	18	30	2		4030-0761-00	06	16	1		4030-2016-01	07	18	1	
1139-1704-14	01	14	1		4002-7306-01	23	07	2		4030-0763-01	04	01	1		4030-2017-01	06	01	1	
1139-1705-01	01	16	2		4011-0111-01	18	32	2		4030-0764-01	04	01	1		4030-2018-01	06	03	1	
1139-1706-01	01	13	1		4011-0112-01	06	24	1		4030-0765-01	04	01	1		4030-2019-01	08	23	1	
1149-3454-01	11	26	1		4011-2006-01	12	61	2		4030-0766-01	04	01	1		4030-2021-02	16	20	1	
1151-5023-01	14	09	2		4011-2008-01	08	42	1		4030-0767-00	14	57	1		4030-2022-01	16	04	1	
1155-2518-01	19	03	1		4011-2009-01	08	14	1		4030-0901-01	22	44	1		4030-2023-01	16	03	1	
1155-6216-01	22	08	1		4011-2010-01	08	39	1		4030-1001-03	02	28	1		4030-2024-02	16	06	1	
1156-7501-01	02	35	1		4011-2024-01	16	19	1		4030-1002-02	02	18	1		4030-2025-01	16	14	1	
1164-2007-12	08	40	1		4011-2031-01	22	37	1		4030-1003-03	02	17	1		4030-2026-03	07	01	1	
1164-2021-02	08	17	1		4011-2032-01	22	37	1		4030-1004-04	02	29	1		4030-2029-02	07	05	1	
1164-2026-01	08	15	1		4011-2034-02	06	18	1		4030-1005-02	02	20	1		4030-2033-01	16	07	1	
1164-2027-02	08	13	1		4011-2035-01	08	33	1		4030-1006-03	02	09	1		4030-2034-01	06	06	1	
1164-2028-01	08	16	1		4011-2037-01	07	13	1		4030-1007-03	02	15	1		4030-2035-01	06	07	1	
1164-2050-01	14	21	1		4011-2047-01	08	21	1		4030-1009-03	02	06	1		4030-2036-01	06	17	1	
1164-2051-01	07	11	1		4011-2101-02	06	15	1		4030-1010-01	02	07	1		4030-2037-01	07	10	1	
1164-2084-01	08	18	1		4011-2103-01	06	25	1		4030-1011-02	02	10	1		4030-2038-02	07	30	2	
1164-2155-01	07	02	1		4011-2104-01	06	21	1		4030-1012-03	02	11	1		4030-2039-02	22	34	1	
1164-2301-02	08	05	1		4011-2134-01	08	25	3		4030-1013-01	02	08	2		4030-2040-01	06	26	1	
1164-2302-02	08	07	1		4011-2148-01	22	26	1		4030-1014-03	02	04	1		4030-2041-02	07	07	1	
1164-2306-02	08	01	1		4011-3012-01	18	28	2		4030-1015-04	02	03	1		4030-2042-02	07	23	1	
1164-2308-02	08	03	1		4011-3020-01	17	11	2		4030-1016-03	02	33	1		4030-2043-01	14	20	1	
1164-2310-01	08	10	1		4011-3508-01	16	23	1		4030-1017-02	02	38	1		4030-2044-02	14	11	1	
1164-2316-01	08	08	1		4011-3509-01	17	17	1		4030-1018-03	02	25	1		4030-2045-01	14	11	1	
1164-3020-03	18	27	2		4011-3510-01	17	15	1		4030-1019-01	14	10	1		4030-2046-01	14	19	1	
1164-3065-01	21	27	1		4011-3511-01	08	06	1		4030-1020-03	02	01	1		4030-2047-01	14	12	1	
1164-3508-01	17	20	1		4011-3512-01	17	09	1		4030-1021-02	22	48	1		4030-2049-01	06	11	2	
1164-3513-01	17	07	2		4011-3515-01	16	05	2		4030-1022-01	02	14	1		4030-2050-02	14	22	1	
1164-3514-02	17	18	1		4011-4217-01	17	23	1		4030-1023-02	02	16	1		4030-2051-02	14	13	1	
1164-3515-01	17	19	1		4011-5338-01	14	53	1		4030-1025-02	02	34	1		4030-2052-02	16	15	2	
1164-3527-02	17	24	1		4011-5339-01	14	29	1		4030-1027-02	02	02	1		4030-2053-01	24	17	1	
1164-3529-01	17	26	1		4011-5758-02	20	08	2		4030-1030-02	02	12	1		4030-2054-01	24	18	1	
1164-3549-01	17	08	4		4011-5762-01	20	26	2		4030-1033-01	16	02	1		4030-2055-01	14	17	1	
1164-4202-04	17	14	1		4011-5788-01	24	10	3		4030-1034-02	02	36	1		4030-2060-02	22	40	1	
1164-4206-02	17	03	2		4011-5925-02	06	10	2		4030-1040-02	02	23	1		4030-2062-01	07	17	2	
1164-4209-02	17	01	2		4012-3524-01	16	17	1		4030-1041-01	02	13	1		4030-2079-01	07	08	1	
1164-4218-01	17	21	1		4021-7310-01	16	13	1		4030-1051-01	03	15	1		4030-2080-01	07	09	2	
1164-4219-02	16	18	1		4021-7310-01	20	01	2		4030-1052-01	03	13	1		4030-2081-01	07	26	1	
1165-0756-01	17	29	1		4021-7337-01	02	37	1		4030-1053-01	03	16	1		4030-2102-01	08	26	1	
1165-2040-02	08	12	1		4028-7400-01	02	22	1		4030-1381-01	03	10	1		4030-2103-01	22	33	1	
1165-2091-01	06	20	1		4030-0110-02	22	12	1		4030-1382-01	03	07	1		4030-2106-01	22	05	1	
1165-2142-01	08	19	1		4030-0151-01	09	43	1		4030-1383-02	03	11	1		4030-2107-01	22	22	1	
1165-2153-01	08	22	1		4030-0151-01	11	06	1		4030-1384-03	03	04	1		4030-2108-01	22	24	1	
1165-2592-01	18	15	1		4030-0152-01	14	26	1		4030-1385-01	03	06	2		4030-2109-01	06	23	1	
1165-2592-01	19	29	1		4030-0153-01	14	32	1		4030-1386-01	03	12	1		4030-2110-01	22	16	1	
1165-4305-02	14	16	1		4030-0154-03	19	12	1		4030-1387-01	03	05	1		4030-2111-03	22	14	1	
1165-4307-01	14	50	1		4030-0155-05	23	38	2		4030-1388-02	03	03	1		4030-2112-01	08	31	1	
1165-4308-02	14	18	1		4030-0201-01	19	05	1		4030-1390-03	03	09	1		4030-2113-01	08	30	1	

PART NO.	FIG.	INDEX	QTY		PART NO.	FIG.	INDEX	QTY		PART NO.	FIG.	INDEX	QTY		PART NO.	FIG.	INDEX	QTY	
4030-2114-01	08	27	1		4030-3014-01	09	46	1		4030-3112-02	10	36	1		4030-3438-01	12	04	1	
4030-2115-01	08	29	1		4030-3014-01	11	02	1		4030-3114-02	11	19	1		4030-3441-01	12	33	1	
4030-2116-01	07	12	1		4030-3016-01	09	15	1		4030-3115-01	11	15	1		4030-3442-02	12	01	1	
4030-2117-01	08	36	1		4030-3016-01	10	37	1		4030-3116-01	11	17	1		4030-3443-02	12	53	1	
4030-2118-01	08	09	1		4030-3017-02	09	48	1		4030-3117-02	11	14	1		4030-3444-01	12	07	1	
4030-2119-01	06	04	1		4030-3017-02	11	03	1		4030-3121-01	11	13	1		4030-3445-01	12	06	1	
4030-2119-01	22	17	1		4030-3018-01	10	31	1		4030-3122-01	11	12	4		4030-3446-01	13	02	4	
4030-2122-01	22	42	1		4030-3019-02	10	32	1		4030-3123-01	11	10	2		4030-3447-01	12	11	1	
4030-2123-01	08	35	1		4030-3020-01	09	20	2		4030-3124-03	11	23	1		4030-3448-01	12	48	1	
4030-2125-01	22	27	1		4030-3020-01	10	13	2		4030-3125-01	09	05	2		4030-3455-02	13	31	1	
4030-2126-01	22	27	1		4030-3021-01	10	01	1		4030-3125-01	11	22	2		4030-3456-01	12	50	1	
4030-2127-02	22	27	1		4030-3022-01	10	17	1		4030-3128-01	10	35	1		4030-3457-03	12	45	2	
4030-2131-02	22	29	1		4030-3023-03	09	30	1		4030-3129-03	11	21	1		4030-3459-02	13	17	1	
4030-2133-01	22	31	1		4030-3023-03	10	18	1		4030-3130-02	11	09	1		4030-3460-02	13	22	1	
4030-2135-01	22	07	1		4030-3025-02	09	35	1		4030-3134-03	11	11	1		4030-3461-01	13	07	1	
4030-2150-01	22	25	1		4030-3025-02	11	20	1		4030-3135-01	11	18	1		4030-3463-01	13	21	1	
4030-2159-02	22	10	1		4030-3026-02	09	09	1		4030-3201-03	23	18	2		4030-3464-01	12	08	1	
4030-2160-02	22	11	1		4030-3027-02	09	10	1		4030-3202-02	23	24	2		4030-3465-01	12	05	1	
4030-2161-01	22	13	2		4030-3030-01	09	21	1		4030-3203-01	23	09	2		4030-3466-02	13	08	1	
4030-2162-01	07	15	1		4030-3030-01	10	24	1		4030-3205-01	23	11	2		4030-3467-01	12	30	1	
4030-2304-01	22	43	1		4030-3031-01	10	38	1		4030-3206-01	23	10	2		4030-3472-01	13	16	1	
4030-2305-01	22	39	1		4030-3032-03	09	02	1		4030-3207-01	23	13	2		4030-3473-02	13	25	1	
4030-2306-02	22	03	1		4030-3034-01	09	34	2		4030-3208-02	18	37	2		4030-3474-01	12	39	1	
4030-2307-01	22	01	1		4030-3034-01	10	29	2		4030-3211-02	23	01	2		4030-3476-01	12	57	2	
4030-2311-01	02	32	1		4030-3036-01	09	32	2		4030-3212-01	23	08	2		4030-3477-01	12	58	2	
4030-2312-01	22	09	1		4030-3036-01	10	19	2		4030-3213-01	23	16	2		4030-3478-01	12	28	1	
4030-2313-01	22	46	1		4030-3037-01	09	11	1		4030-3214-01	23	04	2		4030-3479-01	12	19	1	
4030-2314-01	22	49	1		4030-3037-01	11	25	1		4030-3215-01	23	05	2		4030-3480-01	13	27	1	
4030-2315-01	22	47	1		4030-3039-01	09	47	1		4030-3216-01	23	21	2		4030-3481-01	12	47	2	
4030-2316-01	22	50	1		4030-3039-01	11	01	1		4030-3217-01	23	34	2		4030-3486-01	13	11	1	
4030-2505-01	18	11	1		4030-3041-02	09	41	1		4030-3218-01	23	22	2		4030-3487-01	13	12	1	
4030-2506-01	18	10	1		4030-3042-02	10	34	1		4030-3221-01	23	30	2		4030-3489-01	12	59	1	
4030-2510-01	18	12	1		4030-3044-01	09	07	1		4030-3222-01	23	37	2		4030-3490-01	12	60	1	
4030-2511-01	18	13	1		4030-3046-03	18	34	2		4030-3223-02	23	17	2		4030-3501-04	17	05	1	
4030-2512-01	18	14	1		4030-3047-02	18	39	2		4030-3224-01	18	47	4		4030-3502-03	16	01	1	
4030-2514-01	18	09	1		4030-3048-02	18	36	2		4030-3224-01	23	29	2		4030-3503-01	16	25	1	
4030-2515-01	18	07	1		4030-3049-01	18	35	2		4030-3225-01	23	25	2		4030-3504-01	17	04	1	
4030-2516-01	18	08	1		4030-3051-01	19	01	1		4030-3226-01	23	32	2		4030-3505-01	17	13	2	
4030-2517-01	18	21	1		4030-3052-01	19	36	1		4030-3227-01	23	15	2		4030-3517-01	16	10	1	
4030-2518-01	18	22	1		4030-3053-01	19	39	2		4030-3228-01	23	14	2		4030-3518-01	16	11	2	
4030-2523-01	18	24	1		4030-3054-01	19	38	1		4030-3229-02	23	41	2		4030-3519-01	22	35	1	
4030-2524-01	18	25	1		4030-3055-01	19	37	2		4030-3401-13	12	35	1		4030-3520-01	16	12	4	
4030-2525-01	18	23	1		4030-3057-01	19	43	1		4030-3402-01	12	40	1		4030-3521-01	16	26	1	
4030-2526-01	18	19	1		4030-3059-01	19	41	1		4030-3403-01	12	41	1		4030-3522-01	22	02	1	
4030-2530-01	18	06	1		4030-3060-01	19	04	1		4030-3404-01	12	37	1		4030-3523-02	22	38	1	
4030-2531-01	18	43	1		4030-3063-01	10	04	1		4030-3408-03	13	29	1		4030-3524-01	22	36	1	
4030-2535-01	18	20	1		4030-3064-01	10	05	1		4030-3409-03	12	51	1		4030-3527-01	16	16	1	
4030-2542-01	18	16	1		4030-3067-01	19	44	1		4030-3410-03	13	09	1		4030-3754-01	12	02	1	
4030-2544-01	18	03	1		4030-3068-01	10	07	1		4030-3411-03	13	10	1		4030-4207-01	17	02	2	
4030-2545-01	18	02	1		4030-3069-01	10	06	1		4030-3412-01	13	20	1		4030-4213-02	17	16	1	
4030-2546-01	18	04	1		4030-3071-01	19	42	1		4030-3414-01	13	04	4		4030-4220-01	17	22	1	
4030-2547-02	18	01	1		4030-3077-01	09	44	1		4030-3415-01	13	03	4		4030-5203-02	15	02	1	
4030-2548-01	16	08	1		4030-3077-01	11	05	1		4030-3416-01	12	03	1		4030-5204-01	15	01	1	
4030-3001-03	09	16	1		4030-3078-01	09	49	1		4030-3417-01	12	16	2		4030-5313-01	14	56	1	
4030-3002-02	09	39	1		4030-3078-01	11	07	1		4030-3419-01	12	23	1		4030-5314-01	14	05	1	
4030-3002-02	10	27	1		4030-3079-01	09	42	1		4030-3420-01	12	24	1		4030-5315-01	14	06	1	
4030-3003-01	09	31	1		4030-3081-01	18	46	4		4030-3422-01	12	25	1		4030-5319-01	14	38	1	
4030-3003-01	10	20	1		4030-3083-01	18	45	2		4030-3423-03	13	06	1		4030-5324-01	19	16	1	
4030-3004-01	09	27	1		4030-3084-01	09	14	1		4030-3424-01	12	13	1		4030-5328-01	19	15	1	
4030-3005-01	09	36	2		4030-3085-01	09	28	1		4030-3425-01	12	49	1		4030-5329-02	19	27	1	
4030-3005-01	10	22	2		4030-3086-01	09	12	1		4030-3426-01	13	15	1		4030-5330-01	19	35	1	
4030-3008-01	09	37	1		4030-3087-01	09	13	1		4030-3427-01	12	36	1		4030-5331-01	19	34	1	
4030-3008-01	10	26	1		4030-3088-01	09	29	2		4030-3428-01	12	44	2		4030-5334-01	19	14	1	
4030-3010-01	10	12	1		4030-3101-01	09	06	1		4030-3429-02	12	18	1		4030-5355-02	19	32	1	
4030-3011-01	09	23	1		4030-3103-02	09	04	1		4030-3430-01	12	17	2		4030-5360-01	14	27	1	
4030-3011-01	10	16	1		4030-3104-01	09	03	1		4030-3432-04	12	10	1		4030-5361-02	14	36	1	
4030-3012-01	09	19	1		4030-3105-01	11	24	1		4030-3434-01	12	14	1		4030-5364-01	14	31	1	
4030-3012-01	10	14	1		4030-3107-01	11	27	1		4030-3435-01	13	28	1		4030-5365-01	14	33	1	
4030-3013-01	09	45	1		4030-3108-01	09	01	2		4030-3436-01	13	18	1		4030-5367-01	19	30	1	
4030-3013-01	11	04	1		4030-3111-02	11	08	1		4030-3437-01	13	26	1		4030-5368-02	19	11	1	

PART NO.	FIG.	INDEX	QTY		PART NO.	FIG.	INDEX	QTY		PART NO.	FIG.	INDEX	QTY		PART NO.	FIG.	INDEX	QTY	
4030-5369-02	19	09	1		4030-5812-01	20	12	1		4030-7303-02	23	28	1		4384-1004-01	22	19	1	
4030-5370-01	19	24	1		4030-5813-01	21	32	1		4030-7304-02	23	23	2		4384-1005-01	22	20	1	
4030-5371-01	19	25	1		4030-5814-01	20	21	1		4030-7305-01	13	30	1		4384-1006-01	04	27	2	
4030-5372-01	19	08	1		4030-5815-01	20	22	1		4030-7306-02	13	14	1		4384-1007-01	05	38	1	
4030-5373-01	19	10	1		4030-5816-01	20	15	1		4030-7307-02	13	14	1		4384-1008-01	01	19	1	
4030-5374-01	19	33	1		4030-5817-02	20	14	1		4030-7308-02	13	14	1		4384-1009-01	01	24	1	
4030-5376-01	19	23	1		4030-5820-03	20	18	1		4030-7309-02	13	30	1		4384-1010-01	01	24	1	
4030-5377-01	19	17	1		4030-5821-02	20	19	1		4030-7310-01	01	25	1		4384-1011-01	01	24	1	
4030-5378-01	14	24	1		4030-5822-03	20	13	1		4030-7311-01	02	24	1		4384-1012-01	05	14	6	
4030-5379-01	14	23	1		4030-5823-01	21	16	1		4030-7312-01	01	25	1		4384-1013-01	05	13	1	
4030-5380-01	14	06	1		4030-5825-02	21	35	1		4030-7313-01	02	26	1		4384-1014-01	05	11	1	
4030-5381-02	14	42	1		4030-5827-01	20	02	2		4030-7314-02	02	31	1		4384-1015-01	05	22	1	
4030-5382-01	14	05	1		4030-5827-01	21	02	2		4030-7315-01	07	32	1		4384-1016-01	05	21	1	
4030-5383-02	14	40	1		4030-5830-01	20	25	1		4030-7316-01	08	20	1		4384-1017-01	05	04	8	
4030-5384-01	14	41	1		4030-5832-02	20	50	1		4030-7316-01	18	44	1		4384-1018-01	05	25	2	
4030-5385-02	14	37	1		4030-5834-01	21	36	1		4030-7318-01	02	21	1		4384-1019-01	05	01	1	
4030-5386-01	14	39	1		4030-5836-01	21	17	1		4030-7319-01	02	21	1		4384-1020-01	04	30	1	
4030-5387-02	14	08	1		4030-5838-01	20	55	1		4030-7320-01	03	02	1		4384-1021-01	05	02	2	
4030-5388-01	14	07	1		4030-5839-03	21	14	1		4030-7321-01	03	02	1		4384-1022-01	05	17	2	
4030-5389-01	14	45	1		4030-5840-02	20	11	1		4030-7327-01	02	21	1		4384-1023-01	05	07	1	
4030-5390-01	14	43	1		4030-5841-01	21	39	1		4030-7328-02	01	05	1		4384-1024-01	05	16	1	
4030-5391-01	14	47	1		4030-5842-01	20	46	1		4030-7329-01	01	18	1		4384-1025-01	05	27	2	
4030-5392-01	14	46	1		4030-5843-02	21	26	2		4030-7330-01	02	24	1		4384-1026-01	05	28	2	
4030-5393-01	14	01	1		4030-5844-02	21	18	2		4030-7331-01	02	24	1		4384-1027-01	05	03	1	
4030-5394-01	14	02	1		4030-5845-02	21	19	1		4030-7340-01	21	37	1		4384-1028-01	05	10	1	
4030-5395-01	14	44	1		4030-5847-01	21	33	1		4030-7341-01	20	53	1		4384-1029-01	05	09	1	
4030-5396-01	14	14	1		4030-5848-01	21	29	1		4030-7851-01	06	28	1		4384-1030-01	05	29	1	
4030-5397-01	02	30	1		4030-5850-01	20	49	1		4030-7852-01	06	29	1		4384-1030-01	05	30	1	
4030-5398-01	14	49	1		4030-5851-01	20	54	1		4030-7853-01	06	30	1		4384-1030-01	05	31	1	
4030-5701-03	20	05	1		4030-5852-01	20	03	1		4030-7854-01	06	28	1		4384-1030-01	05	32	1	
4030-5702-02	20	04	1		4030-5853-01	24	11	4		4109-2003-01	08	37	1		4384-1030-01	05	33	1	
4030-5703-02	20	24	1		4030-5854-01	21	22	2		4109-2003-01	14	48	1		4384-1030-01	05	34	1	
4030-5705-01	20	39	1		4030-5855-01	21	25	2		4109-2003-01	20	51	2		4384-1030-01	05	35	1	
4030-5706-02	20	36	1		4030-5856-01	21	04	6		4111-2531-01	08	41	1		4384-1030-01	05	37	1	
4030-5708-01	20	45	1		4030-5857-01	21	28	2		4120-1014-02	02	27	1		4384-1031-01	05	36	1	
4030-5710-03	20	38	1		4030-5858-01	21	23	2		4128-1978-01	06	09	3		4384-1032-01	04	12	1	
4030-5711-01	20	41	1		4030-6051-02	03	01	1		4128-1979-01	06	08	3		4384-1032-01	05	24	1	
4030-5712-02	20	07	2		4030-6052-02	03	01	1		4128-3823-01	23	35	2		4384-1033-01	05	06	1	
4030-5713-02	20	37	1		4030-6053-03	03	01	1		4131-0902-01	09	18	2		4384-1034-01	05	15	1	
4030-5714-01	20	47	1		4030-6054-03	03	01	1		4131-0902-01	10	15	4		4384-1035-01	05	46	1	
4030-5715-01	21	30	1		4030-6055-03	03	01	1		4131-0902-01	12	20	2		4384-1036-01	04	09	1	
4030-5716-02	21	13	5		4030-6056-03	03	01	1		4131-0902-01	13	01	4		4384-1037-01	04	04	1	
4030-5717-01	21	12	5		4030-6061-01	03	01	1		4131-0902-01	17	27	1		4384-1038-01	04	17	1	
4030-5721-02	21	21	1		4030-6203-02	06	27	1		4131-0902-01	18	31	8		4384-1039-01	05	42	1	
4030-5726-03	20	44	1		4030-6757-01	06	05	1		4131-0902-01	21	09	1		4384-1040-01	05	41	1	
4030-5727-02	20	20	1		4030-6757-01	22	06	2		4131-0902-01	22	41	1		4384-1041-01	05	40	1	
4030-5728-01	20	29	1		4030-6804-01	04	18	1		4131-3001-01	12	46	1		4384-1042-01	04	06	1	
4030-5729-01	20	28	1		4030-6806-03	07	19	1		4131-3003-01	09	17	5		4384-1043-01	05	43	1	
4030-5730-01	20	30	1		4030-6807-02	06	12	1		4131-3003-01	10	09	5		4384-1044-01	04	11	1	
4030-5732-01	20	06	1		4030-6808-02	22	04	1		4131-3003-01	19	07	8		4384-1045-01	04	10	1	
4030-5733-02	20	32	1		4030-6809-01	17	06	1		4131-3004-02	12	22	1		4384-1046-01	05	44	1	
4030-5739-01	20	31	1		4030-6810-02	18	33	1		4131-3007-02	12	27	1		4384-1047-01	04	20	1	
4030-5740-02	20	40	1		4030-6811-01	09	40	1		4131-3053-02	12	42	1		4384-1049-01	01	23	1	
4030-5741-02	20	23	1		4030-6812-02	10	30	1		4131-3054-02	12	38	1		4384-1050-01	04	03	1	
4030-5743-01	20	34	2		4030-6813-02	18	17	1		4131-3532-02	10	02	2		4384-1053-01	05	20	1	
4030-5749-01	20	43	1		4030-6814-03	13	19	1		4131-4128-01	12	12	1		4384-1055-01	05	12	1	
4030-5750-03	21	08	1		4030-6815-01	22	18	1		4131-4623-03	13	13	2		4384-1056-01	04	16	1	
4030-5751-01	21	20	1		4030-6816-01	06	02	1		4163-5205-01	15	04	1		4384-1058-01	04	07	1	
4030-5752-03	21	01	1		4030-6817-01	21	10	1		4163-5207-01	15	10	1		4384-1061-01	05	23	1	
4030-5753-01	21	11	1		4030-6818-01	12	52	1		4163-5208-01	15	06	1		4384-1062-01	05	05	2	
4030-5801-03	20	10	1		4030-6819-03	06	13	1		4163-5209-01	15	07	1		4384-1063-01	04	05	2	
4030-5802-01	20	09	1		4030-6842-01	08	28	1		4163-5210-02	15	03	1		4384-1064-01	04	24	1	
4030-5803-01	21	38	1		4030-6843-01	07	03	1		4163-5238-01	15	05	1		4384-1065-01	04	21	1	
4030-5805-03	21	03	6		4030-6844-01	08	32	1		4163-5239-01	15	09	1		4384-1068-01	05	26	4	
4030-5806-01	21	24	2		4030-6851-02	22	30	1		4163-5240-01	15	08	1		4384-1069-01	04	22	1	
4030-5807-01	21	05	4		4030-6852-02	22	30	1		4163-5278-01	14	25	2		4384-1070-01	05	08	1	
4030-5808-02	21	15	1		4030-6853-02	08	34	1		4163-5293-01	11	16	3		4384-1072-01	04	15	1	
4030-5809-02	21	06	1		4030-6854-02	08	11	1		4163-5293-01	18	42	1		4384-1073-01	04	14	1	
4030-5810-02	21	07	1		4030-7301-02	23	26	2		4163-5293-01	19	31	1		4384-1075-01	05	45	5	
4030-5811-01	21	34	1		4030-7302-02	23	27	1		4384-1003-01	04	08	1		4384-1086-01	04	26	1	

PART NO.	FIG.	INDEX	QTY		PART NO.	FIG.	INDEX	QTY		PART NO.	FIG.	INDEX	QTY		PART NO.	FIG.	INDEX	QTY	
4384-1087-01	04	13	1		9372-2710-21	17	12	1											
4384-1088-01	04	28	4		9372-5100-12	22	32	1											
4384-1089-01	04	25	3		9373-2200-11	04	29	1											
4384-1090-01	05	19	1		9381-4101-22	01	27	1											
4384-1091-01	05	18	4		9381-4101-31	01	27	1											
4384-1092-01	05	39	1		9381-4810-61	01	27	1											
4384-1093-01	04	02	1		9381-4910-22	01	27	1											
4384-1094-01	04	23	3		9383-2200-11	14	55	1											
4384-1095-01	04	19	1		9383-2210-11	14	54	1											
4384-1098-01	04	17	1		9383-2210-11	19	20	2											
4384-1099-01	05	42	1		9383-2210-21	19	19	1											
4384-1100-01	22	19	1		9384-1000-51	24	01	23											
4384-1101-01	22	19	1		9384-1100-11	24	02	1											
4384-1102-01	04	31	3		9384-1100-91	24	03	68											
4425-3013-01	09	38	1		9384-1110-61	24	04	3											
4425-3013-01	10	28	1		9384-1300-11	24	05	1											
4425-3016-01	09	33	1		9384-1310-91	24	06	1											
4425-3016-01	10	21	1		9384-1311-11	24	14	9											
4498-3469-01	23	19	2		9384-1621-21	22	15	4											
4498-3804-01	23	36	2		9384-1921-01	24	07	18											
4498-3825-01	23	39	2		9384-1921-11	24	08	2											
4498-3826-01	23	33	2		9384-1921-31	24	09	8											
4498-3834-01	23	40	4		9384-2010-21	24	12	16											
4515-6051-01	15	11	1		9384-2910-11	24	16	1											
4515-711	15	12	1		9384-2910-31	24	13	12											
4581-1389-01	03	08	2		9384-4300-11	02	05	1											
4628-6801-01	01	26	1		9384-4300-21	06	32	1											
4628-6802-01	01	28	1		9455-1078-01	21	31	1											
4628-6803-01	01	29	1		9455-3078-01	17	25	1											
4658-0151-01	12	43	1																
4658-3012-01	23	06	2																
4658-3047-01	08	02	2																
4658-3047-01	22	21	2																
4658-3048-01	23	02	4																
4658-3049-01	23	03	4																
4658-3513-01	09	08	9																
4658-3517-01	12	56	1																
4683-2137-01	19	22	1																
4687-3281-01	12	54	1																
9312-1200-31	18	38	2																
9313-1100-31	16	09	1																
9313-1100-41	22	23	1																
9313-1100-51	06	22	1																
9313-1100-51	20	52	1																
9314-2100-41	18	26	2																
9321-2100-41	12	26	1																
9321-2100-41	19	21	1																
9321-2200-62	19	26	1																
9322-1000-81	17	10	1																
9322-1200-21	10	08	1																
9322-1200-21	19	02	1																
9322-1200-31	10	03	1																
9322-1200-31	12	29	1																
9325-2200-12	06	14	1																
9325-2200-22	06	14	1																
9326-1000-51	22	45	1																
9326-2300-11	01	12	1																
9326-2900-06	14	28	1																
9331-1810-11	08	38	1																
9331-2200-21	07	14	1																
9334-1300-11	20	35	1																
9334-2710-11	14	30	1																
9351-1200-11	14	15	1																
9352-2200-63	20	16	1																
9352-2200-73	20	16	1																
9352-2200-83	20	16	1																
9352-2200-92	20	17	1																
9352-2201-02	20	17	1																
9352-2201-12	20	17	1																
9372-2200-51	20	33	2																



Copyright

2003 MINOLTA Co., Ltd.

Printed in Japan

Use of this catalog should be strictly supervised to avoid disclosure of confidential information.

MINOLTA Co., Ltd.

4030-7995-21 03070000