MINOLTA

Parts Catalog

The essentials of imaging

AFR-19

4344-611

PREFACE

1. The part numbers listed in Parts Catalog are those which were assigned to the parts making up the machine at the time machine was originally introduced onto the market.

2. Parts whose INDEX numbers are shown white against a black background in the illustration are those to be used in only certain market areas. These part numbers are given in the lower half part of the list section. Check the SFIX No. listed in SFIX CHART on page II to find which part number is applicable to your own area.

3. Parts whose INDEX numbers are shown black against a white background in the illustration are those to be used in all market areas. These parts are listed on the upper half part of the list section.

4. If "NS" follows a part number given in the list section, it indicates that we do not keep a stock of the part. The part is not required for ordinary service jobs, either.

5. If "RP" is shown in the REC column of the list section, it indicates that the part is functionally important.

6. In the exploded views in this Parts Catalog the parts (Screws & Washes, etc...) which are indicated with a "four-digit" numbers are listed in numerical order in the section "SCREWS AND WASHERS". Please check these "four-digit" numbers with the part numbers ("ten-digit" numbers) which should be used for ordering the part.

7. All part numbers consist of "ten-digit" which should all be quoted when ordering a part. The price of parts can be obtained by referring to the "Parts Price List" which is separately issued.

8. All infomation contained in this Parts Catalog is subject to change.

CONTENTS

1. HOUSING ••••••

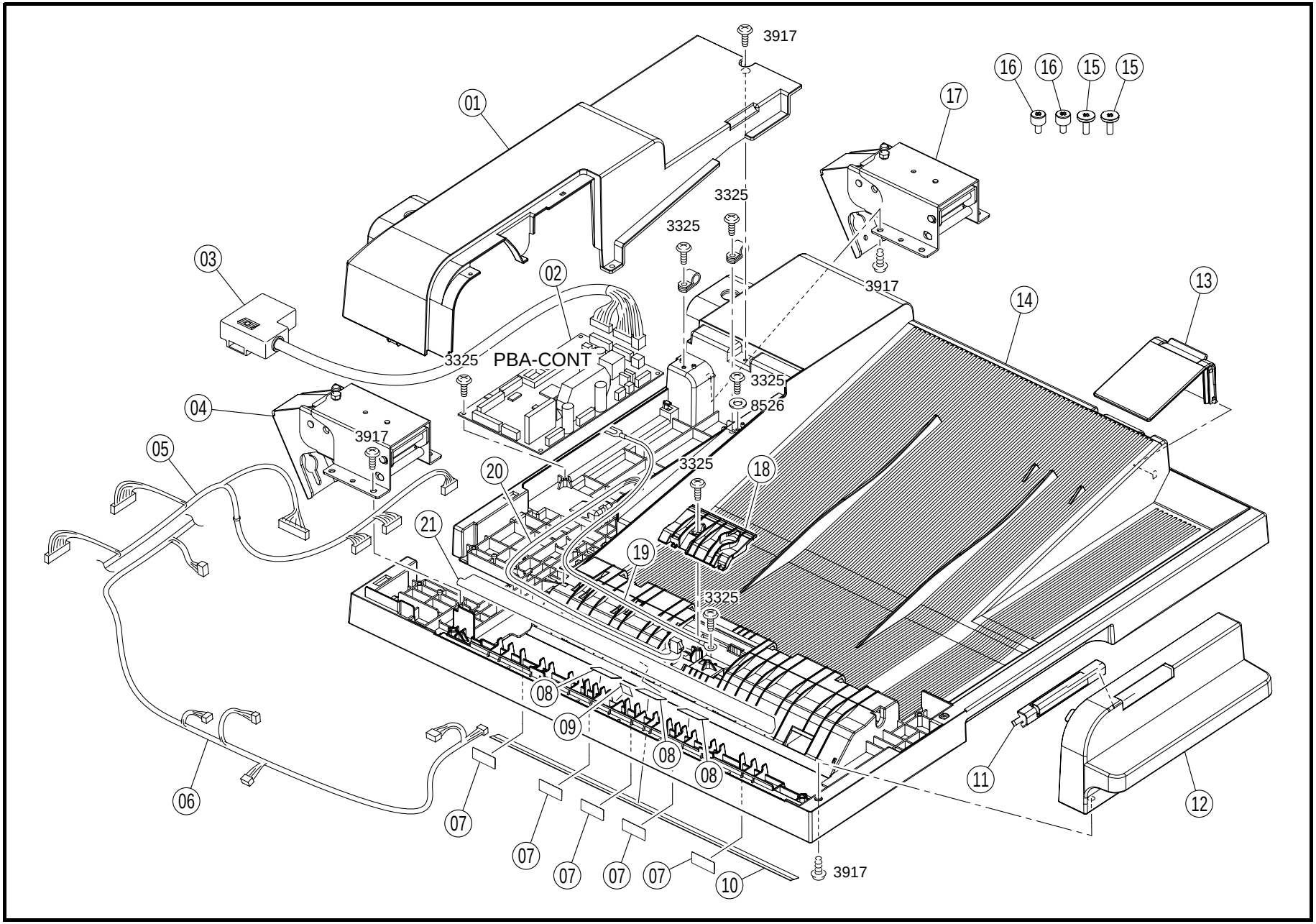
3917
01
16
16
15
15
17
3325
3325
03
02
3917
14
13
3325
PBA-CONT
3325
8526
04
3917
05
20
18
3325
21
19
3325
08
09
08
08
06
07
07
07
07
07
07
10
3917
11
12

INDEX	PART NO.	PART NAME	REC	QTY
01	4344-5016-01	COVER		1
02	4344-5004-01	PWB ASSY MAIN (PBA-CONT)	RP	1
03	4344-5154-01	HARNESS ASSY		1
04	4344-5128-01	HINGE ASSY		1
05	4344-5151-01	HARNESS ASSY		1
06	4344-5152-01	HARNESS ASSY		1
07	4344-5143-01	FILM		5
08	4344-5140-01	FILM		3
09	4344-5077-01	SEAL		1
10	4344-5144-01	FILM		1
11	4344-5019-01	COVER		1
12	4344-5008-01	COVER		1
13	4344-5133-01	STOPPER		1
14	4344-5131-01	BASE FRAME		1
15	4582-2410-01	SHOULDER SCREW		2
16	4582-2411-01	SCREW		2
17	4344-5127-01	HINGE ASSY		1
18	4344-5132-01	COVER		1
19	4344-5162-01	HARNESS ASSY		1
20	4344-5153-01	HARNESS ASSY		1
21	4344-5139-01	FILM		1

INDEX	PART NO.	PART NAME	REC	QTY	SFIX

2 PAPER TAKE-UP SECTION (A) AFR-19

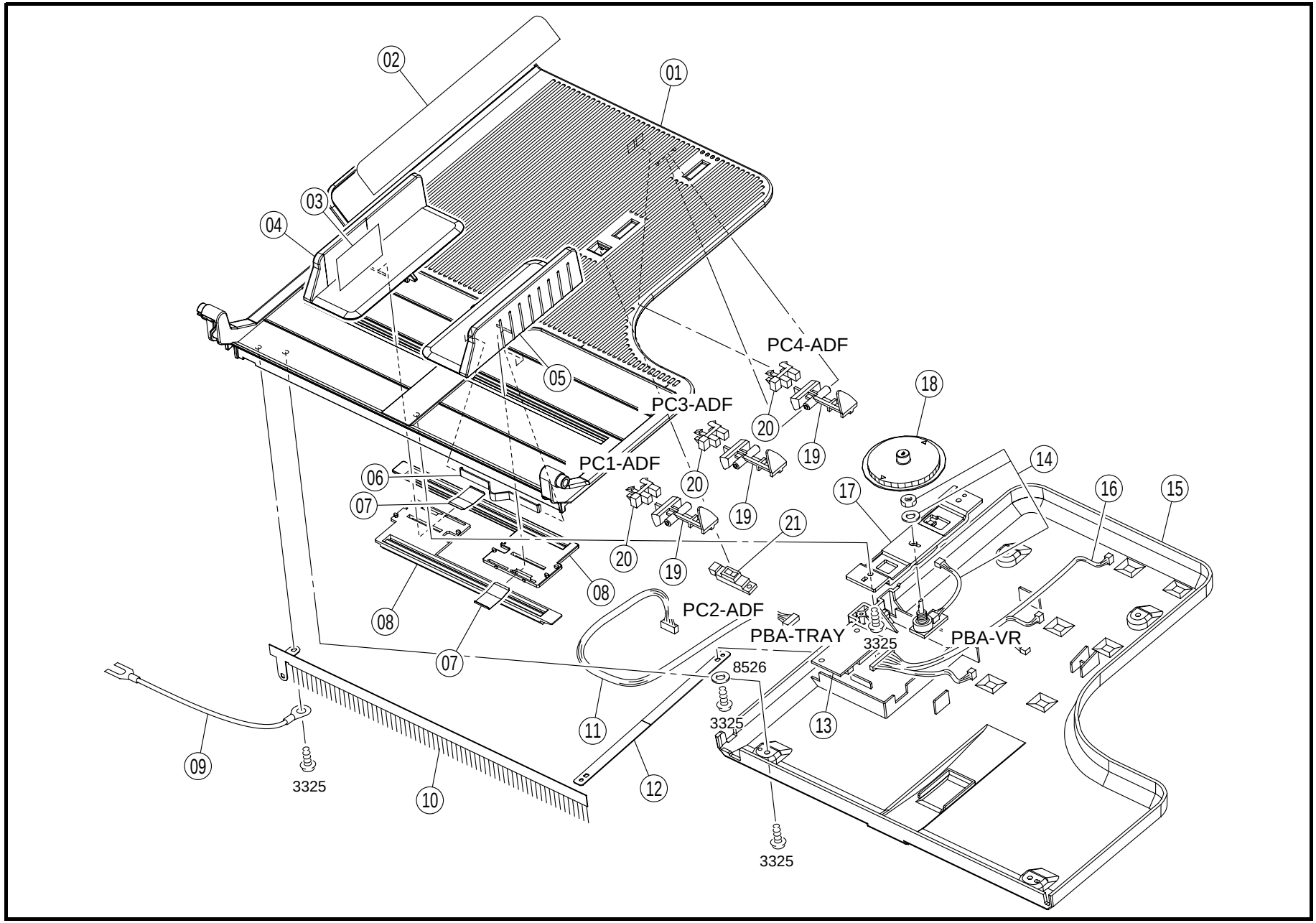

INDEX	PART NO.	PART NAME	REC	QTY
01	4344-5060-01	TRAY		1
02	4344-5119-01	LABEL		1
03	4344-5118-01	LABEL		1
04	4344-5063-01	REGULATING PLATE		1
05	4344-5062-01	REGULATING PLATE		1
06	4344-5068-01	PLATE SPRING		1
07	4688-2017-01	PLATE SPRING		2
08	4344-5066-01	RACK		2
09	4344-5155-01	HARNESS ASSY		1
10	4344-5069-01	NEURALIZING BRUSH		1
11	4344-5147-01	HARNESS ASSY		1
12	4344-5070-01	BAND		1
13	4344-5158-01	PWB ASSY I/F (PBA-TRAY)		1
14	4344-5156-01	PWB ASSY SIZE (PBA-VR)		1
15	4344-5061-01	COVER		1
16	4344-5148-01	HARNESS ASSY		1
17	4344-5065-01	HOLDER		1
18	4344-5064-01	GEAR		1
19	4344-5067-01	LEVER		3
20	4583-4136-01	SOLID STATE SWITCH (PC1.3.4-ADF)		3
21	4344-5166-01	SOLID STATE SWITCH PAPER SI (PC2-ADF)		1

INDEX	PART NO.	PART NAME	REC	QTY	SFIX

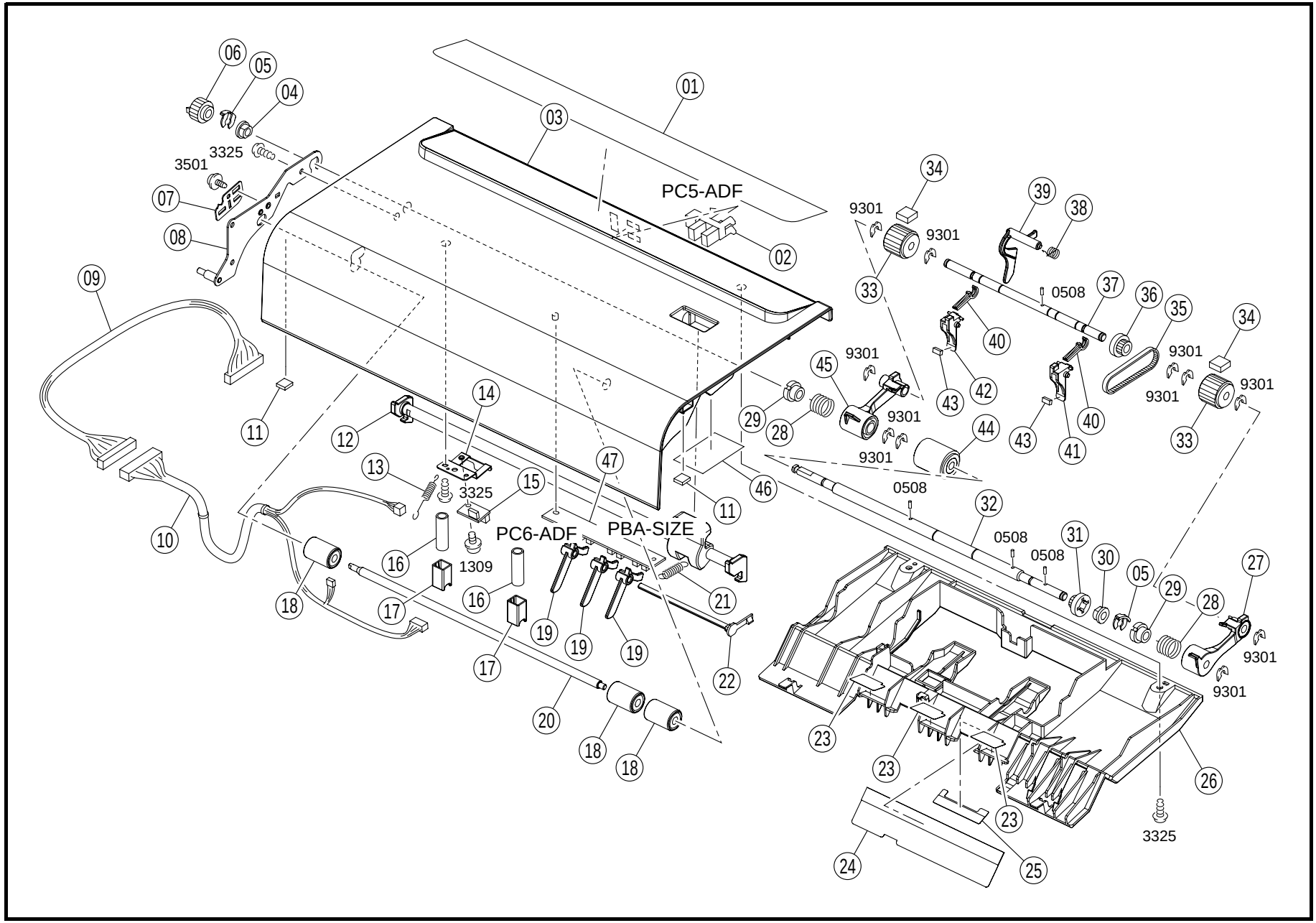
PC5-ADF
PC6-ADF
PBA-SIZE
3325
3501
1309
9301
0508

INDEX	PART NO.	PART NAME	REC	QTY
01	4344-5120-01	LABEL		1
02	4583-4136-01	SOLID STATE SWITCH EMPTY (PC5-ADF)		1
03	4344-5086-01	COVER		1
04	4496-2538-01	BUSHING		1
05	4496-3003-01	STOPPER RING		2
06	4344-5111-01	GEAR		1
07	4344-5113-01	BRACKET		1
08	4344-5083-01	BRACKET ASSY		1
09	4344-5149-01	HARNESS ASSY		1
10	4344-5150-01	HARNESS ASSY		1
11	4344-5114-01	SPONGE		2
12	4344-5087-01	KNOB		1
13	4344-5101-01	TENSION SPRING		1
14	4344-5094-01	BRACKET		1
15	4344-5167-01	SOLID STATE SWITCH REGIST (PC6-ADF)		1
16	4344-5100-01	PRESSURE SPRING		2
17	4344-5091-01	HOLDER		2
18	4344-5093-01	ROLLER		3
19	4344-5089-01	LEVER		3
20	4344-5097-01	SHAFT		1
21	4344-5103-01	TENSION SPRING		1
22	4344-5090-01	ACTUATOR		1
23	4344-5102-01	FILM		3
24	4344-5099-01	FILM		1

INDEX	PART NO.	PART NAME	REC	QTY
25	4344-5105-01	FILM		1
26	4344-5085-01	COVER		1
27	4688-3051-01	ARM		1
28	4688-3038-01	SPRING	RP	2
29	4344-5110-01	DRUM		2
30	4583-4059-01	BUSHING		1
31	4344-5092-01	PULLEY		1
32	4344-5095-01	SHAFT		1
33	4344-5003-01	ROLLER	RP	2
34	4344-5115-01	SPONGE		2
35	4344-5182-01	TIMING BELT		1
36	4688-3054-01	PULLEY		1
37	4344-5096-01	SHAFT		1
38	4344-5098-01	TORSION SPRING		1
39	4344-5088-01	LEVER		1
40	4688-3052-01	STOPPER		2
41	4688-3049-01	STOPPER		1
42	4688-3048-01	STOPPER		1
43	4344-5104-01	SPONGE		2
44	4582-3014-01	ROLLER	RP	1
45	4688-3050-01	ARM		1
46	4344-5117-01	LABEL		1
47	4344-5157-01	PWB ASSY SIZE (PBA-SIZE)		1

INDEX	PART NO.	PART NAME	REC	QTY	SFIX

4 PAPER TAKE-UP SECTION (C) AFR-19

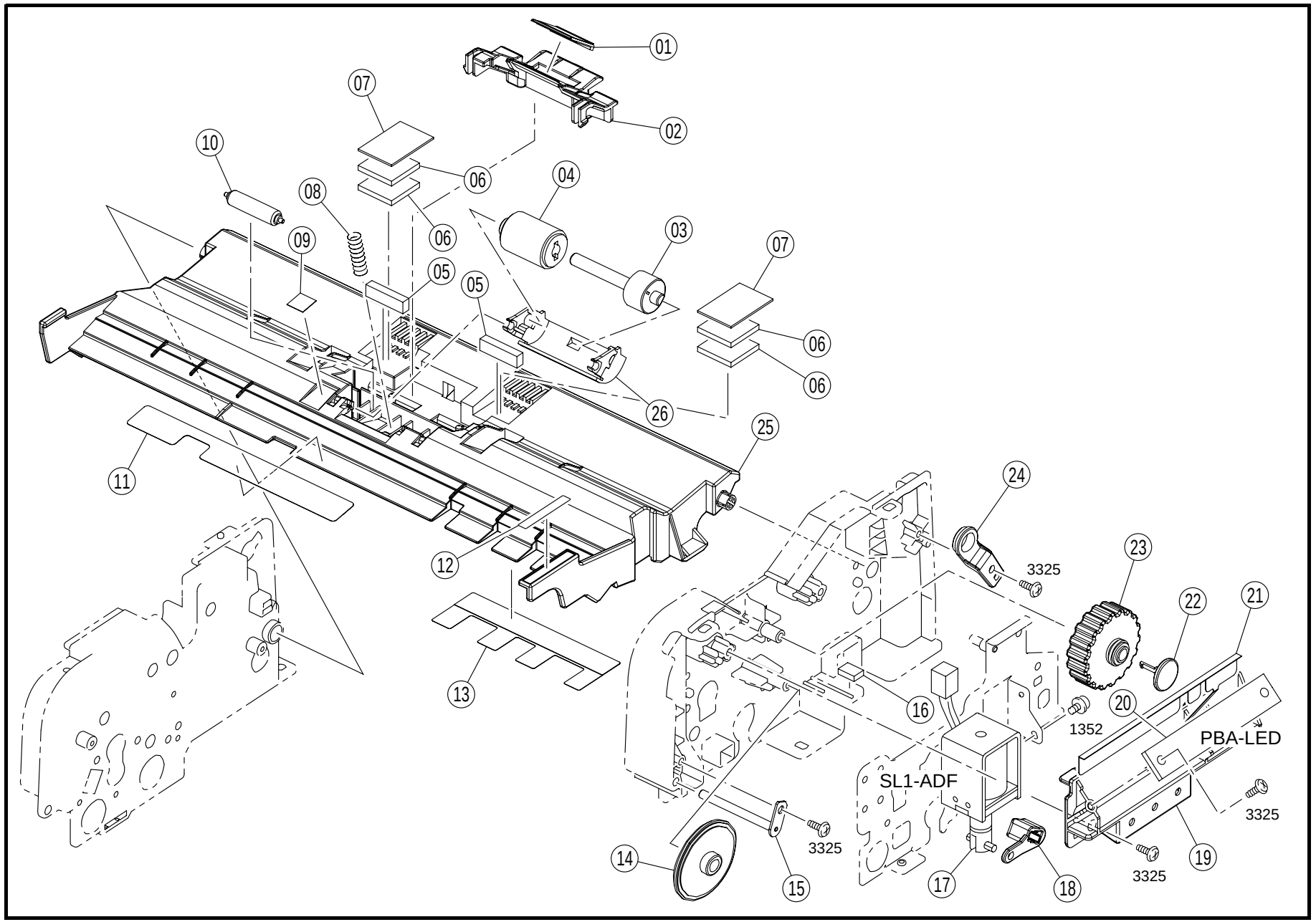

INDEX	PART NO.	PART NAME	REC	QTY
01	4344-5081-01	RUBBER		1
02	4344-5072-01	HOLDER		1
03	4344-5079-01	JOINT ASSY		1
04	4582-3047-01	ROLLER	RP	1
05	4344-5082-01	SPONGE		2
06	4344-5074-01	SPONGE		4
07	4344-5075-01	SEAL		2
08	4344-5078-01	PRESSURE SPRING		1
09	4344-5077-01	SEAL		1
10	4688-3007-01	ROLL		1
11	4344-5076-01	FILM		1
12	4344-5116-01	LABEL		1
13	4344-5080-01	FILM		1
14	4344-5043-01	GEAR		1
15	4344-5084-01	BRACKET ASSY		1
16	4344-5054-01	SPONGE		1
17	4344-5165-01	SOLENOID ASSY EXIT (SL1-ADF)		1
18	4344-5039-01	LEVER		1
19	4344-5011-01	HOLDER		1
20	4344-5159-01	PWB ASSY (PBA-LED)		1
21	4344-5024-01	PLATE		1
22	4344-5050-01	PIN		1
23	4344-5018-01	GEAR		1
24	4344-5049-01	HOLDER		1
25	4344-5071-01	GUIDE		1
26	4344-5073-01	HOLDER		1

INDEX	PART NO.	PART NAME	REC	QTY	SFIX

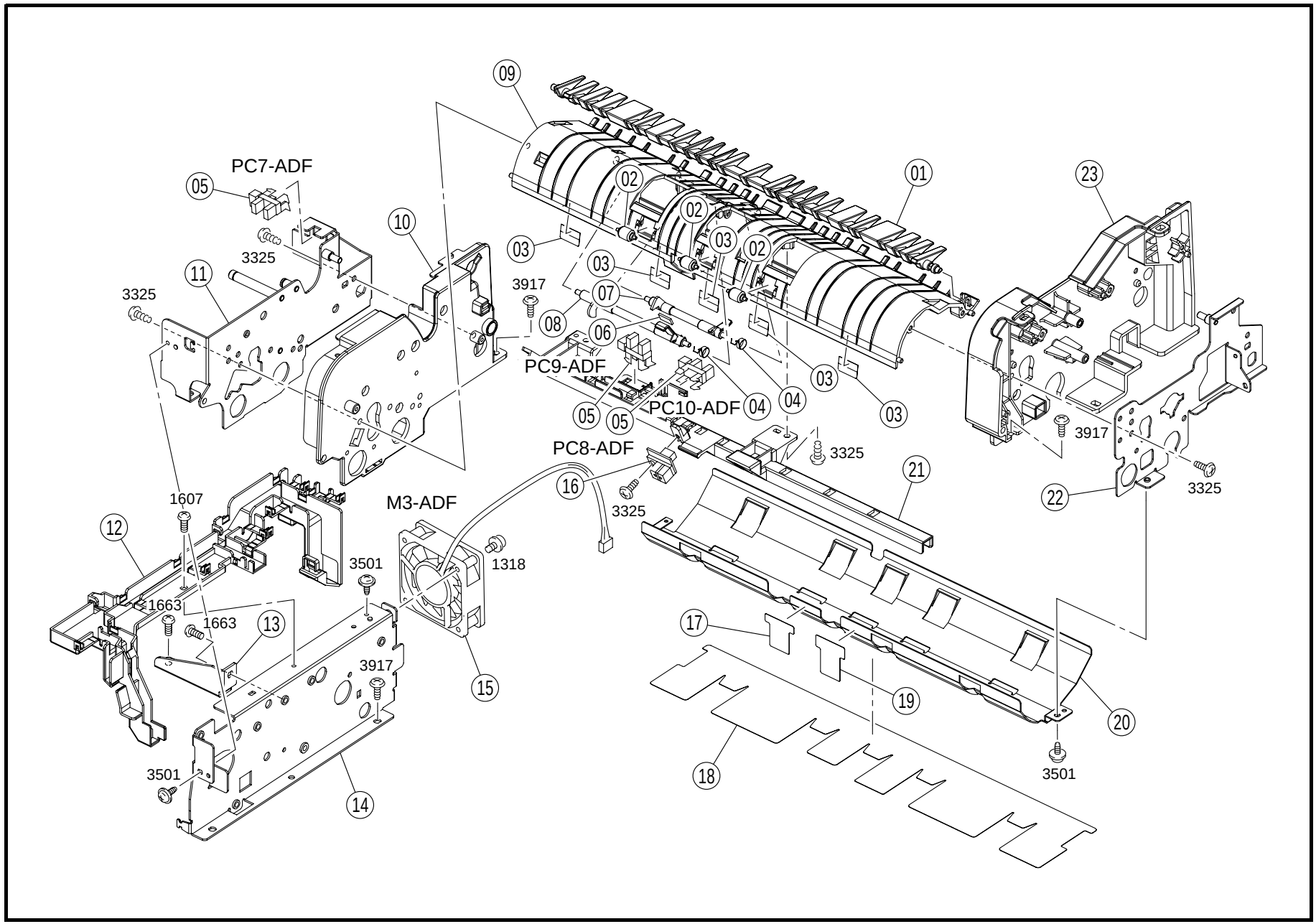

PC7-ADF
PC9-ADF
PC10-ADF
PC8-ADF
M3-ADF
01
02
03
04
05
06
07
08
09
10
11
12
13
14
15
16
17
18
19
20
21
22
23
3325
3917
1607
1663
3501
1318

INDEX	PART NO.	PART NAME	REC	QTY
01	4344-5013-01	PAWL		1
02	4688-3058-01	ROLL		3
03	4344-5032-01	FILM		5
04	4344-5053-01	TORSION SPRING		2
05	4583-4136-01	SOLID STATE SWITCH (PC7.9.10-ADF)		3
06	4344-5054-01	SPONGE		1
07	4344-5010-01	LEVER		1
08	4344-5040-01	LEVER		1
09	4344-5009-01	GUIDE		1
10	4344-5014-01	HOLDER		1
11	4344-5005-01	FRAME ASSY		1
12	4344-5017-01	HOLDER		1
13	4344-5023-01	BRACKET		1
14	4344-5022-01	BRACKET		1
15	4344-5164-01	FAN MOTOR COOLING (M3-ADF)		1
16	4344-5167-01	SOLID STATE SWITCH ORIGINA (PC8-ADF)		1
17	4344-5034-01	FILM		1
18	4344-5025-01	FILM	RP	1
19	4344-5035-01	FILM		1
20	4344-5020-01	GUIDE PLATE		1
21	4344-5015-01	HOLDER		1
22	4344-5006-01	FRAME ASSY		1
23	4344-5012-01	HOLDER		1

INDEX	PART NO.	PART NAME	REC	QTY	SFIX

6 PAPER TRANSPORT SECTION (B) AFR-19

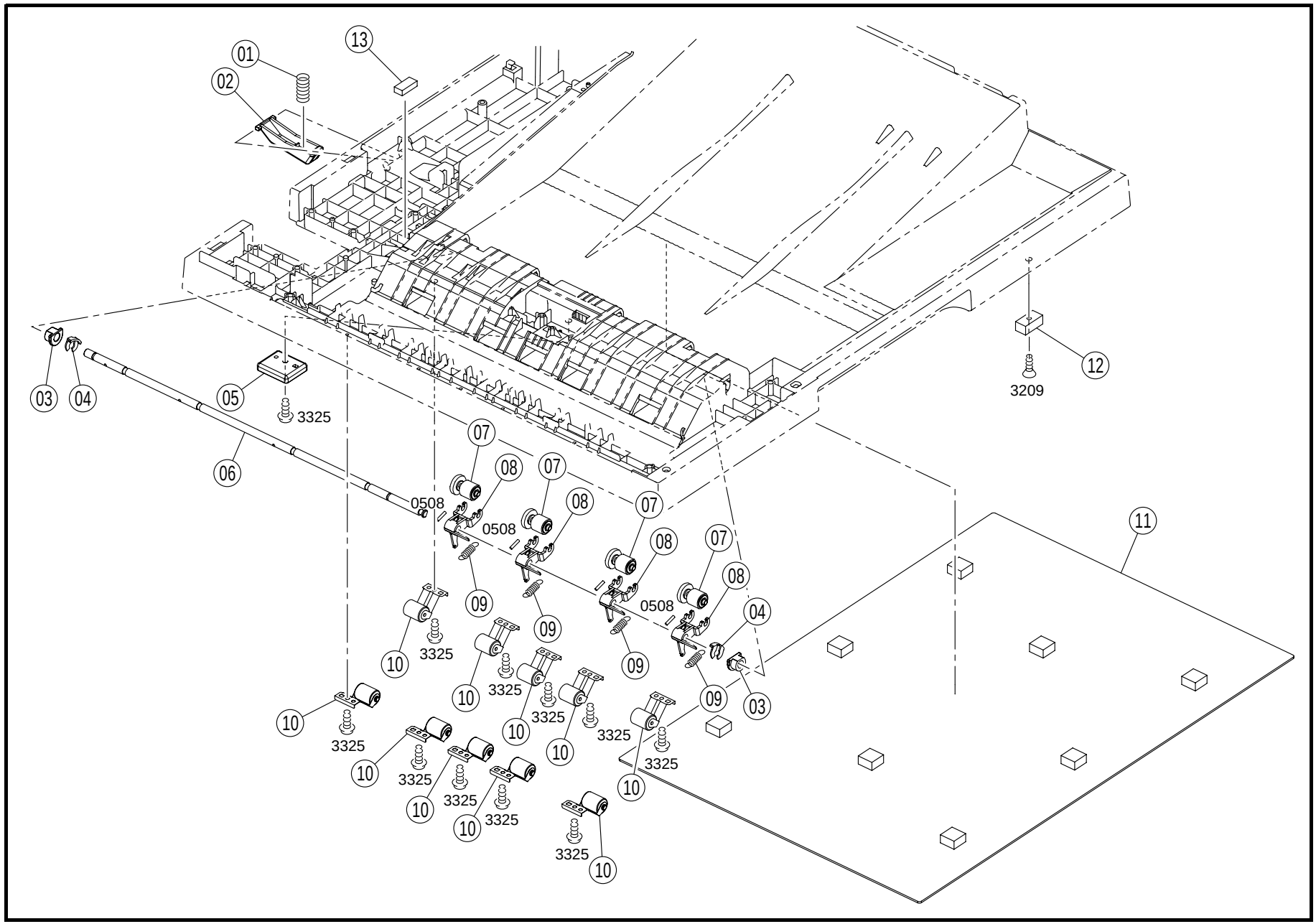

INDEX	PART NO.	PART NAME	REC	QTY	INDEX	PART NO.	PART NAME	REC	QTY
01	4344-5138-01	PRESSURE SPRING		1					
02	4344-5134-01	ARM		1					
03	4344-5142-01	BUSHING		2					
04	4496-3003-01	STOPPER RING		2					
05	4344-5135-01	SPACER		1					
06	4344-5136-01	SHAFT		1					
07	4344-5130-01	ROLL ASSY		4					
08	4344-5141-01	HOLDER		4					
09	4344-5137-01	TENSION SPRING		4					
10	4344-5129-01	ROLL ASSY		10					
11	4344-5125-01	ORIGINAL COVER MAT		1					
12	4344-5146-01	MAGNET		1					
13	4344-5054-01	SPONGE		1					

INDEX	PART NO.	PART NAME	REC	QTY	SFIX

7 DRIVE SECTION AFR-19

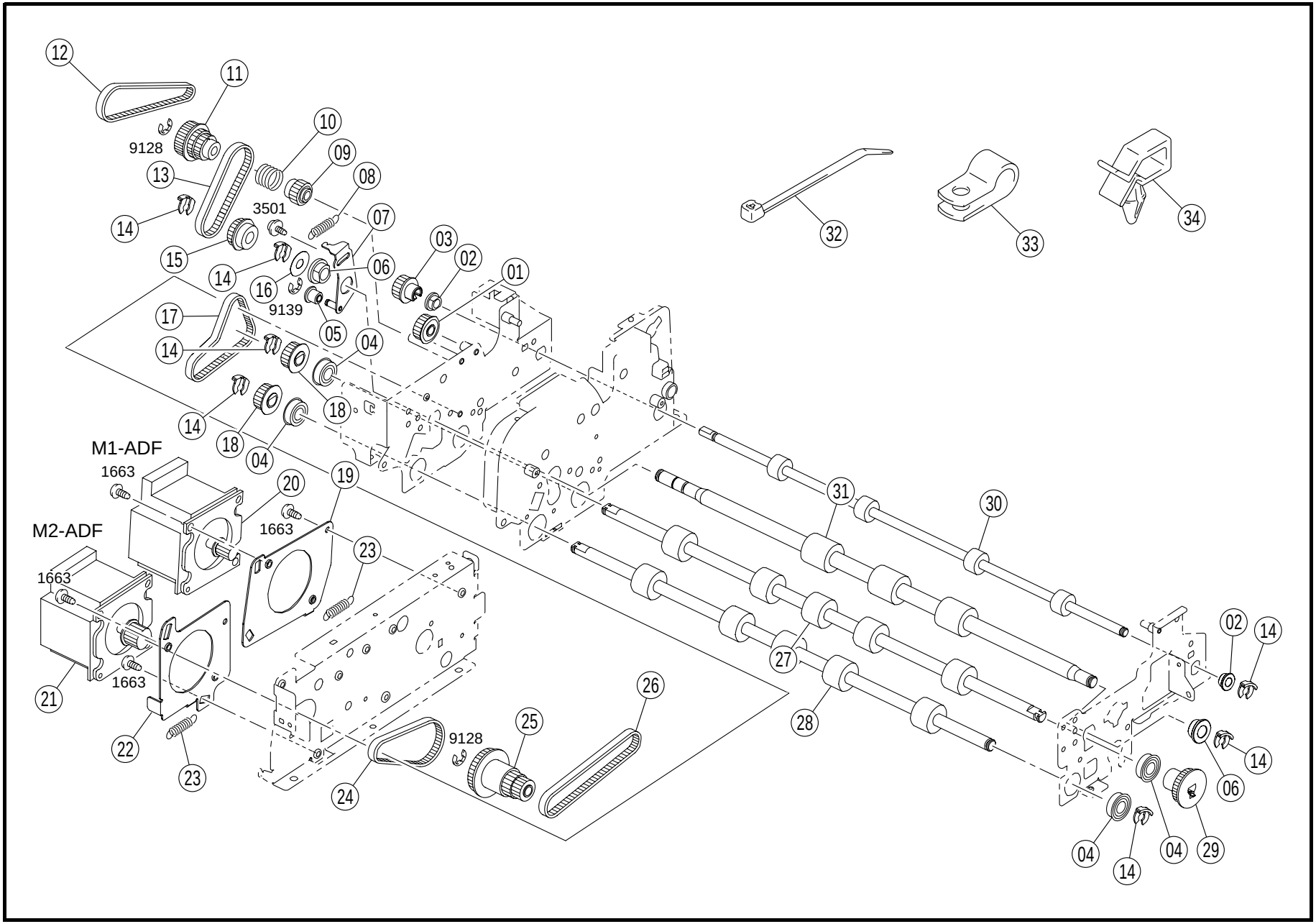

INDEX	PART NO.	PART NAME	REC	QTY
01	4344-5048-01	GEAR		1
02	4496-2538-01	BUSHING		2
03	4344-5045-01	PULLEY		1
04	4583-4110-01	BALL BEARING		4
05	4344-5041-01	ROLL		1
06	4583-4547-01	BUSHING		2
07	4344-5007-01	BRACKET ASSY		1
08	4344-5031-01	TENSION SPRING		1
09	4344-5047-01	GEAR		1
10	4344-5059-01	TORSION SPRING		1
11	4344-5046-01	PULLEY		1
12	4344-5175-01	TIMING BELT		1
13	4344-5174-01	TIMING BELT		1
14	4496-3003-01	STOPPER RING		7
15	4344-5052-01	PULLEY		1
16	4344-5033-01	FILM		1
17	4344-5176-01	TIMING BELT		1
18	4344-5044-01	PULLEY		2

INDEX	PART NO.	PART NAME	REC	QTY
19	4344-5051-01	BRACKET		1
20	4344-5161-01	MOTOR TAKE-UP (M1-ADF)		1
21	4344-5160-01	MOTOR TRANSPO (M2-ADF)		1
22	4344-5021-01	BRACKET		1
23	4344-5030-01	TENSION SPRING		2
24	4496-2116-01	TIMING BELT		1
25	4344-5180-01	PULLEY		1
26	4344-5177-01	TIMING BELT		1
27	4344-5028-01	ROLLER		1
28	4344-5027-01	ROLLER		1
29	4344-5042-01	GEAR		1
30	4344-5026-01	ROLLER		1
31	4344-5029-01	ROLLER		1
32	4688-6751-01	CABLE TIE		1
33	4344-5169-01	P-CLIP		2
34	4344-5170-01	WIRING SADDLE		6

INDEX	PART NO.	PART NAME	REC	QTY	SFIX

8 SCREWS AND WASHERS AFR-19

INDEX	PART NO.	PART NAME	ILLUST
0508	9752-2010-50	PIN	
1309 1352 1381	9646-0310-13 9646-0304-13 9646-0430-13	SCREW	
1607	9654-0306-13	SCREW	
3209	9657-0310-21	TAPPING SCREW	
3325	9732-0310-01	TAPPING SCREW	
3501	9735-0306-13	TAPPING SCREW	
3907 3917	9742-0308-13 9742-0412-01	TAPPING SCREW	
8526	9716-0500-13	WASHER	
9128 9139	9721-0500-08 9721-0300-08	RETAINING RING	
9301	1066-1151-01	RETAINING RING	

INDEX	PART NO.	PART NAME	ILLUST

INDEX	PART NO.	PART NAME	ILLUST

PART NO.	FIG.	INDEX	QTY		PART NO.	FIG.	INDEX	QTY		PART NO.	FIG.	INDEX	QTY		PART NO.	FIG.	INDEX	QTY	
4344-5003-01	03	33	2		4344-5077-01	04	09	1		4344-5158-01	02	13	1						
4344-5004-01	01	02	1		4344-5078-01	04	08	1		4344-5159-01	04	20	1						
4344-5005-01	05	11	1		4344-5079-01	04	03	1		4344-5160-01	07	21	1						
4344-5006-01	05	22	1		4344-5080-01	04	13	1		4344-5161-01	07	20	1						
4344-5007-01	07	07	1		4344-5081-01	04	01	1		4344-5162-01	01	19	1						
4344-5008-01	01	12	1		4344-5082-01	04	05	2		4344-5164-01	05	15	1						
4344-5009-01	05	09	1		4344-5083-01	03	08	1		4344-5165-01	04	17	1						
4344-5010-01	05	07	1		4344-5084-01	04	15	1		4344-5166-01	02	21	1						
4344-5011-01	04	19	1		4344-5085-01	03	26	1		4344-5167-01	03	15	1						
4344-5012-01	05	23	1		4344-5086-01	03	03	1		4344-5167-01	05	16	1						
4344-5013-01	05	01	1		4344-5087-01	03	12	1		4344-5169-01	07	33	2						
4344-5014-01	05	10	1		4344-5088-01	03	39	1		4344-5170-01	07	34	6						
4344-5015-01	05	21	1		4344-5089-01	03	19	3		4344-5174-01	07	13	1						
4344-5016-01	01	01	1		4344-5090-01	03	22	1		4344-5175-01	07	12	1						
4344-5017-01	05	12	1		4344-5091-01	03	17	2		4344-5176-01	07	17	1						
4344-5018-01	04	23	1		4344-5092-01	03	31	1		4344-5177-01	07	26	1						
4344-5019-01	01	11	1		4344-5093-01	03	18	3		4344-5180-01	07	25	1						
4344-5020-01	05	20	1		4344-5094-01	03	14	1		4344-5182-01	03	35	1						
4344-5021-01	07	22	1		4344-5095-01	03	32	1		4496-2116-01	07	24	1						
4344-5022-01	05	14	1		4344-5096-01	03	37	1		4496-2538-01	03	04	1						
4344-5023-01	05	13	1		4344-5097-01	03	20	1		4496-2538-01	07	02	2						
4344-5024-01	04	21	1		4344-5098-01	03	38	1		4496-3003-01	03	05	2						
4344-5025-01	05	18	1		4344-5099-01	03	24	1		4496-3003-01	06	04	2						
4344-5026-01	07	30	1		4344-5100-01	03	16	2		4496-3003-01	07	14	7						
4344-5027-01	07	28	1		4344-5101-01	03	13	1		4582-2410-01	01	15	2						
4344-5028-01	07	27	1		4344-5102-01	03	23	3		4582-2411-01	01	16	2						
4344-5029-01	07	31	1		4344-5103-01	03	21	1		4582-3014-01	03	44	1						
4344-5030-01	07	23	2		4344-5104-01	03	43	2		4582-3047-01	04	04	1						
4344-5031-01	07	08	1		4344-5105-01	03	25	1		4583-4059-01	03	30	1						
4344-5032-01	05	03	5		4344-5110-01	03	29	2		4583-4110-01	07	04	4						
4344-5033-01	07	16	1		4344-5111-01	03	06	1		4583-4136-01	02	20	3						
4344-5034-01	05	17	1		4344-5113-01	03	07	1		4583-4136-01	03	02	1						
4344-5035-01	05	19	1		4344-5114-01	03	11	2		4583-4136-01	05	05	3						
4344-5039-01	04	18	1		4344-5115-01	03	34	2		4583-4547-01	07	06	2						
4344-5040-01	05	08	1		4344-5116-01	04	12	1		4688-2017-01	02	07	2						
4344-5041-01	07	05	1		4344-5117-01	03	46	1		4688-3007-01	04	10	1						
4344-5042-01	07	29	1		4344-5118-01	02	03	1		4688-3038-01	03	28	2						
4344-5043-01	04	14	1		4344-5119-01	02	02	1		4688-3048-01	03	42	1						
4344-5044-01	07	18	2		4344-5120-01	03	01	1		4688-3049-01	03	41	1						
4344-5045-01	07	03	1		4344-5125-01	06	11	1		4688-3050-01	03	45	1						
4344-5046-01	07	11	1		4344-5127-01	01	17	1		4688-3051-01	03	27	1						
4344-5047-01	07	09	1		4344-5128-01	01	04	1		4688-3052-01	03	40	2						
4344-5048-01	07	01	1		4344-5129-01	06	10	10		4688-3054-01	03	36	1						
4344-5049-01	04	24	1		4344-5130-01	06	07	4		4688-3058-01	05	02	3						
4344-5050-01	04	22	1		4344-5131-01	01	14	1		4688-6751-01	07	32	1						
4344-5051-01	07	19	1		4344-5132-01	01	18	1											
4344-5052-01	07	15	1		4344-5133-01	01	13	1											
4344-5053-01	05	04	2		4344-5134-01	06	02	1											
4344-5054-01	04	16	1		4344-5135-01	06	05	1											
4344-5054-01	05	06	1		4344-5136-01	06	06	1											
4344-5054-01	06	13	1		4344-5137-01	06	09	4											
4344-5059-01	07	10	1		4344-5138-01	06	01	1											
4344-5060-01	02	01	1		4344-5139-01	01	21	1											
4344-5061-01	02	15	1		4344-5140-01	01	08	3											
4344-5062-01	02	05	1		4344-5141-01	06	08	4											
4344-5063-01	02	04	1		4344-5142-01	06	03	2											
4344-5064-01	02	18	1		4344-5143-01	01	07	5											
4344-5065-01	02	17	1		4344-5144-01	01	10	1											
4344-5066-01	02	08	2		4344-5146-01	06	12	1											
4344-5067-01	02	19	3		4344-5147-01	02	11	1											
4344-5068-01	02	06	1		4344-5148-01	02	16	1											
4344-5069-01	02	10	1		4344-5149-01	03	09	1											
4344-5070-01	02	12	1		4344-5150-01	03	10	1											
4344-5071-01	04	25	1		4344-5151-01	01	05	1											
4344-5072-01	04	02	1		4344-5152-01	01	06	1											
4344-5073-01	04	26	1		4344-5153-01	01	20	1											
4344-5074-01	04	06	4		4344-5154-01	01	03	1											
4344-5075-01	04	07	2		4344-5155-01	02	09	1											
4344-5076-01	04	11	1		4344-5156-01	02	14	1											
4344-5077-01	01	09	1		4344-5157-01	03	47	1											



Copyright

2003 MINOLTA Co., Ltd.

Printed in Japan

Use of this catalog should be strictly supervised to avoid disclosure of confidential information.

MINOLTA Co., Ltd.

4344-7995-21 03061500