MINOLTA

Parts Catalog

The essentials of imaging

FN-117
AK-1

4349

PREFACE

1. The part numbers listed in Parts Catalog are those which were assigned to the parts making up the machine at the time machine was originally introduced onto the market.

2. Parts whose INDEX numbers are shown white against a black background in the illustration are those to be used in only certain market areas. These part numbers are given in the lower half part of the list section. Check the SFIX No. listed in SFIX CHART on page II to find which part number is applicable to your own area.

3. Parts whose INDEX numbers are shown black against a white background in the illustration are those to be used in all market areas. These parts are listed on the upper half part of the list section.

4. If "NS" follows a part number given in the list section, it indicates that we do not keep a stock of the part. The part is not required for ordinary service jobs, either.

5. If "RP" is shown in the REC column of the list section, it indicates that the part is functionally important.

6. In the exploded views in this Parts Catalog the parts (Screws & Washes, etc...) which are indicated with a "four-digit" numbers are listed in numerical order in the section "SCREWS AND WASHERS". Please check these "four-digit" numbers with the part numbers ("ten-digit" numbers) which should be used for ordering the part.

7. All part numbers consist of "ten-digit" which should all be quoted when ordering a part. The price of parts can be obtained by referring to the "Parts Price List" which is separately issued.

8. All infomation contained in this Parts Catalog is subject to change.

CONTENTS

1. HOUSING ••••••

1 HOUSING FN-117

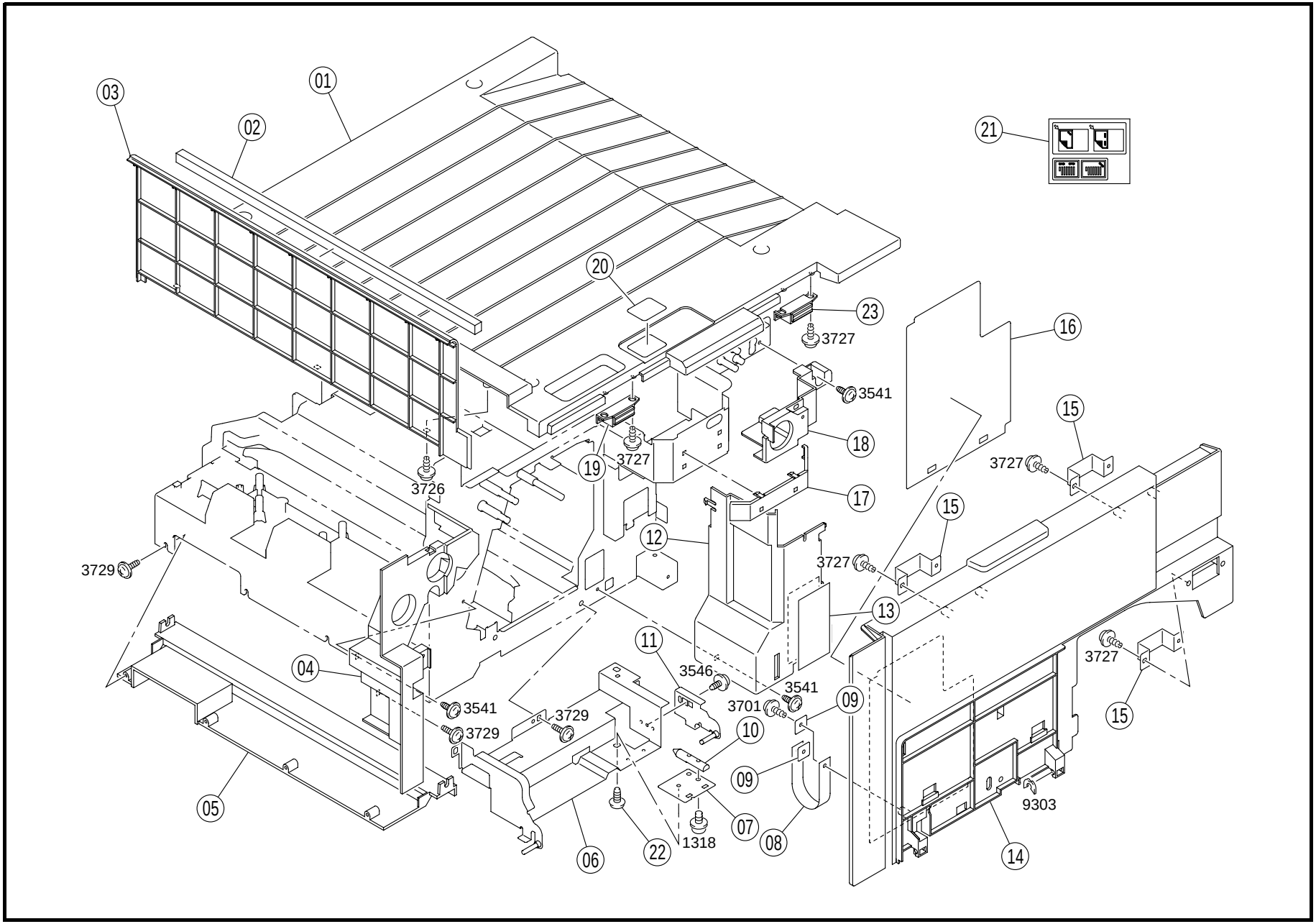

INDEX	PART NO.		PART NAME	REC	QTY
01	4349-1007-04		COVER		1
02	4349-1024-01		SPACER		1
03	4349-1006-03		COVER		1
04	4349-1005-05		COVER		1
05	4349-1105-03		SPACER		1
06	4349-1013-03	NS	HINGE		1
07	4349-1021-02	NS	BRACKET		1
08	4643-1020-02		BAND		1
09	1053-3103-01		SET PLATE		2
10	4349-1212-01	NS	PIN		1
11	4349-0215-03	NS	BRACKET ASSY		1
12	4349-1014-04		COVER		1
13	4349-7309-01		LABEL		1
14	4349-1001-04		COVER		1
15	4349-1019-01		BRACKET		3
16	4349-7307-02		LABEL		1
17	4349-1020-02		COVER		1
18	4349-1010-04		COVER		1
19	4426-2607-01		MAGNET CATCH		1
20	4349-7308-01		LABEL		1
21	4349-7310-01		LABEL		1
22	4002-2581-01		SCREW		1
23	4425-3366-01		MAGNET CATCH		1

INDEX	PART NO.	PART NAME	REC	QTY	SFIX

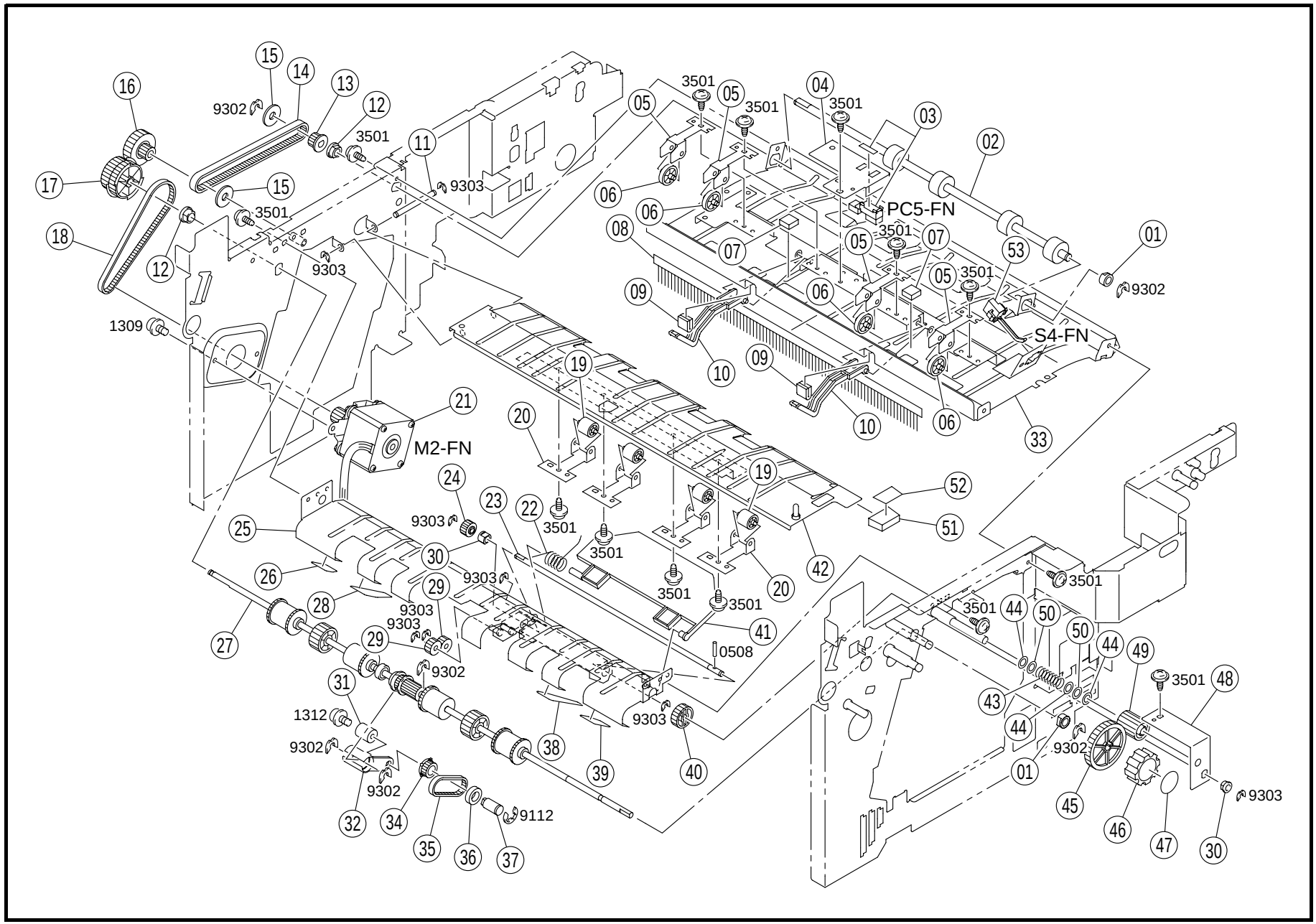
PC5-FN
S4-FN
M2-FN
9302
3501
9303
1309
0508
1312
9112

INDEX	PART NO.		PART NAME		REC	QTY
01	1200-3121-07		BUSHING			2
02	4349-1319-01		ROLLER			1
03	4349-0902-01		SOLID STATE SWITCH	(PC5-FN)		1
04	4349-1323-01	NS	BRACKET			1
05	4349-1384-01		PLATE SPRING			4
06	4349-1386-01		ROLL			4
07	4698-1086-01		CUSHION			2
08	4349-1309-01		NEUTRALIZING BRUSH			1
09	4349-1392-01		CUSHION			2
10	4349-1325-01		LEVER			2
11	4349-1332-01		SHAFT			1
12	4131-3003-01		BUSHING			2
13	4349-1378-01		PULLEY			1
14	4349-1379-01		TIMING BELT			1
15	4349-1380-01		FLANGE			2
16	4349-1377-01		PULLEY			1
17	4349-1375-01		PULLEY			1
18	4349-1376-01		TIMING BELT			1
19	4426-4411-02		ROLL			4
20	4349-1321-01		PLATE SPRING			4
21	9314-1201-11		MOTOR	(M2-FN)		1
22	4349-1388-02		TORSION SPRING			1
23	4349-1616-02	NS	SHAFT			1
24	4349-1626-01		GEAR			1
25	4349-1308-02	NS	GUIDE			1
26	4349-1316-01		GUIDE			1
27	4349-1320-03		ROLLER			1

INDEX	PART NO.		PART NAME		REC	QTY
28	4349-1318-01		GUIDE			1
29	4349-1623-01		GEAR			2
30	4004-5339-01	NS	BUSHING			2
31	4349-1635-02		COLLAR			1
32	4349-1620-01		ARM			1
33	4349-1340-02	NS	GUIDE			1
34	4349-1618-02		PULLEY			1
35	4349-1632-03		TIMING BELT			1
36	4349-1634-02		COLLAR			1
37	4349-1621-01		SHAFT			1
38	4349-1317-01		GUIDE			1
39	4349-1313-01		GUIDE			1
40	4349-1625-01		GEAR			1
41	4349-1387-04		GUIDE			1
42	4349-0206-02	NS	BRACKET ASSY			1
43	4349-1639-01		PRESSURE SPRING			1
44	4349-1640-01		WASHER			3
45	4349-1615-01		GEAR			1
46	1274-3602-02		KNOB			1
47	4349-7302-01		LABEL			1
48	4349-1608-01	NS	BRACKET			1
49	4349-1614-01		GEAR			1
50	4349-1641-01		WASHER			2
51	4643-3073-03		HANDLE			1
52	4349-7306-01		LABEL			1
53	4109-6301-02		MICRO-SWITCH	(S4-FN)		1

INDEX	PART NO.	PART NAME	REC	QTY	SFIX

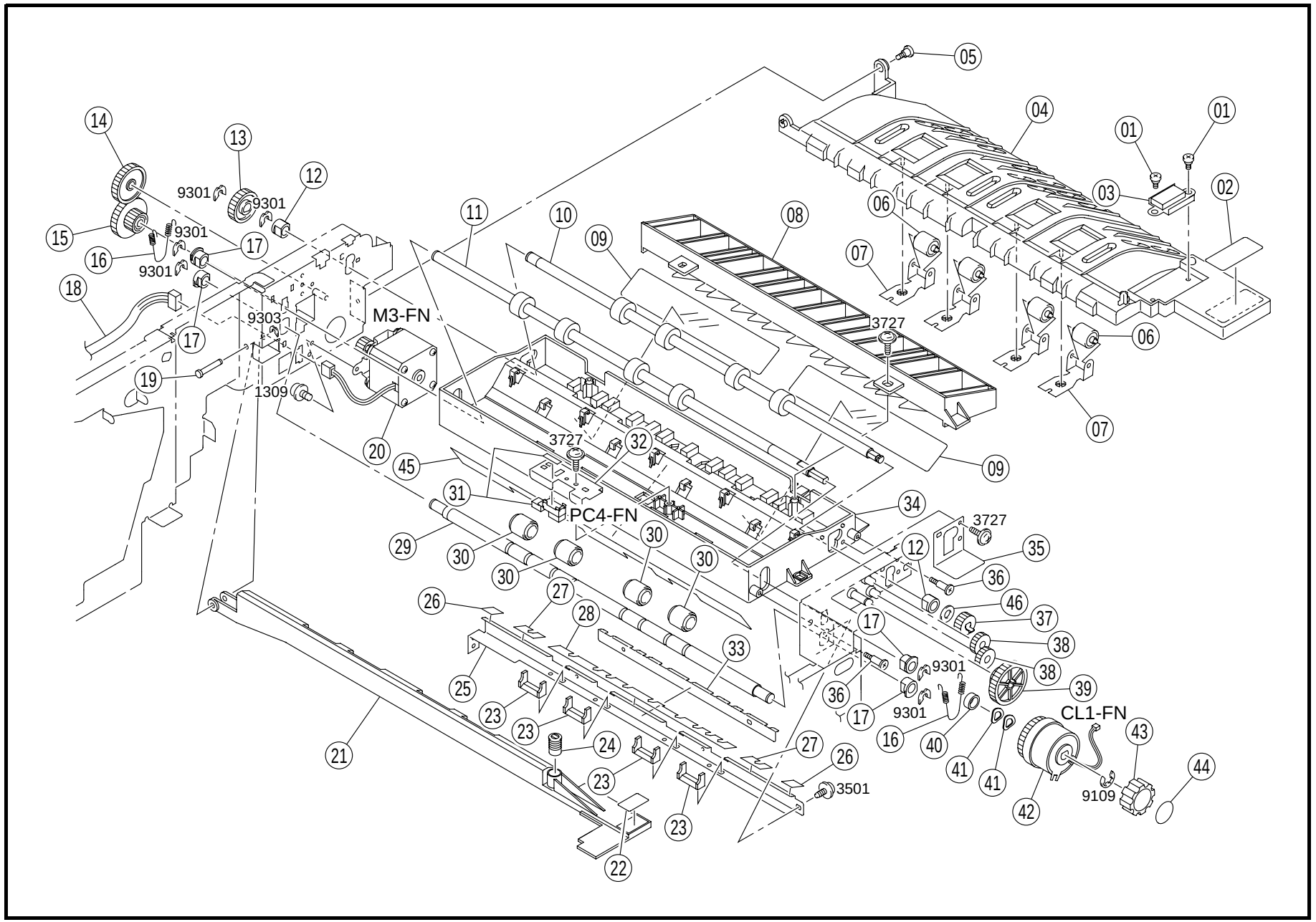
05
04
01
01
02
03
06
07
08
09
10
11
12
13
14
15
16
17
18
19
20
21
22
23
24
25
26
27
28
29
30
31
32
33
34
35
36
37
38
39
40
41
42
43
44
45
46
9301
9303
1309
3727
3501
9109
M3-FN
PC4-FN
CL1-FN

INDEX	PART NO.	PART NAME	REC	QTY
01	4349-1311-01	SHOULDER SCREW		2
02	4349-7304-01	LABEL		1
03	4425-3249-02	MAGNET CATCH		1
04	4349-1302-02	GUIDE		1
05	1273-3003-01	SHOULDER SCREW		1
06	4643-3031-01	ROLL		4
07	4349-1333-01	PLATE SPRING		4
08	4349-1301-02	GUIDE		1
09	4349-1344-01	GUIDE		2
10	4349-1312-02	ROLLER		1
11	4349-1314-02	ROLLER		1
12	4658-3516-01	BUSHING		2
13	4349-1356-01	GEAR		1
14	4349-1351-01	GEAR		1
15	4349-1353-01	GEAR		1
16	4349-1338-01	TENSION SPRING		2
17	1164-3509-01	BUSHING		4
18	4349-6803-01 NS	WIRE HARNESS ASSY		1
19	4349-1342-01	SHAFT		1
20	9314-1201-41	MOTOR (M3-FN)		1
21	4349-1341-04	GUIDE		1
22	4349-7305-01	LABEL		1
23	4349-1328-02	COLLAR		4
24	4475-3601-01	MAGNET		1
25	4349-1304-02 NS	GUIDE		1
26	4349-1345-02	GUIDE		2
27	4349-1343-01	GUIDE		2
28	4349-1310-03	GUIDE		1
29	4349-1337-01 NS	SHAFT		1
30	4349-1315-02	ROLL		4
31	4349-0902-01	SOLID STATE SWITCH (PC4-FN)		1
32	4349-1346-01 NS	BRACKET		1
33	4349-1327-01	BRACKET		1
34	4349-1303-02 NS	GUIDE		1
35	4349-1347-02 NS	SUCTION PLATE		1
36	4643-3007-01	SHOULDER SCREW		2
37	4349-1361-01	GEAR		1
38	4349-1352-01	GEAR		2
39	4349-1359-01	GEAR		1
40	4349-1362-01	COLLAR		1
41	1500-2660-13	WAVE WASHER		2
42	9322-1000-81	CLUTCH (CL1-FN)		1
43	1274-3602-02	KNOB		1
44	4349-7301-01	LABEL		1
45	4349-1391-03	GUIDE		1
46	4349-1393-01	SPACER		1

INDEX	PART NO.	PART NAME	REC	QTY	SFIX

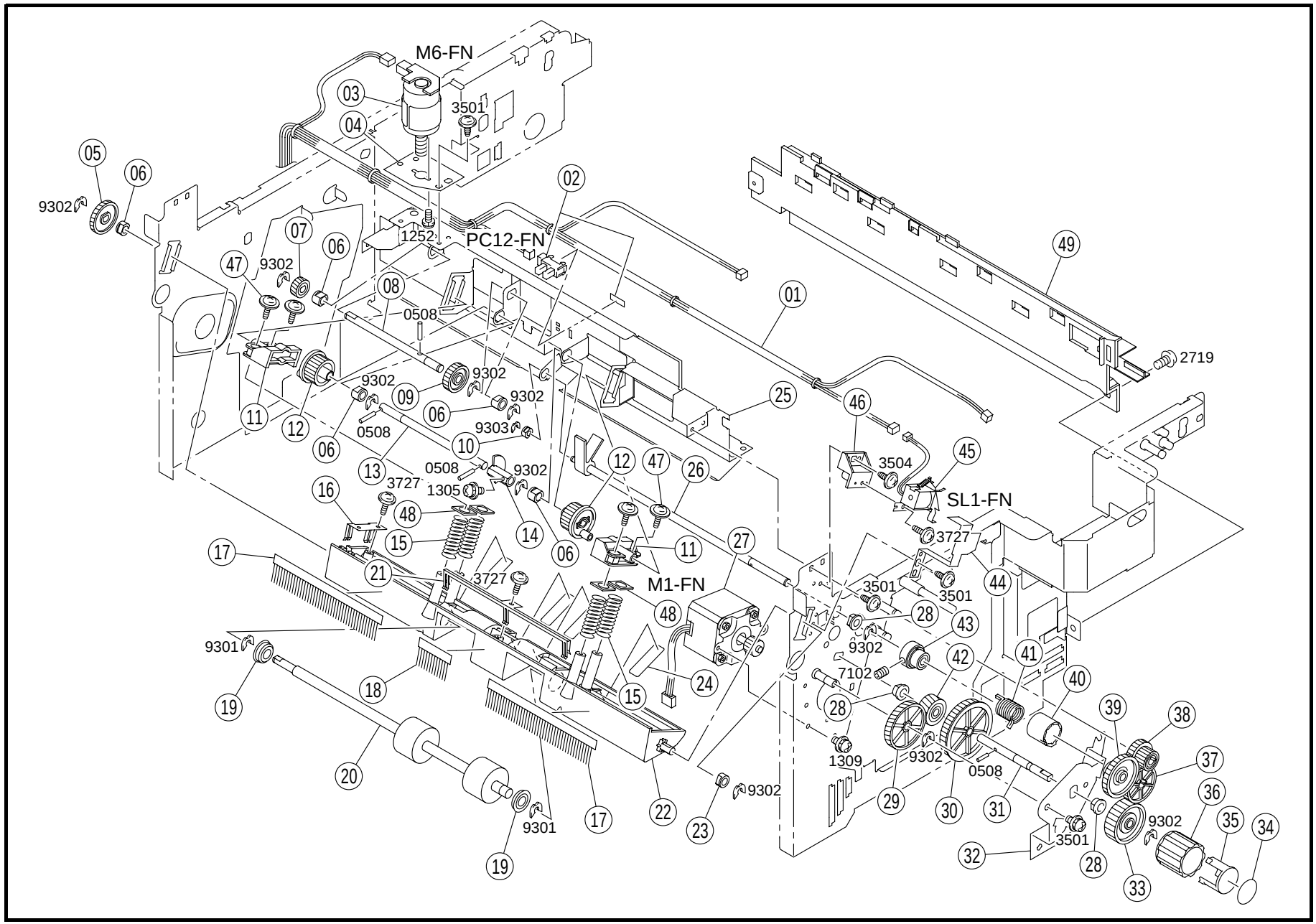
M6-FN
PC12-FN
M1-FN
SL1-FN
01
02
03
04
05
06
07
08
09
10
11
12
13
14
15
16
17
18
19
20
21
22
23
24
25
26
27
28
29
30
31
32
33
34
35
36
37
38
39
40
41
42
43
44
45
46
47
48
49
9302
3501
1252
0508
9303
3727
1305
3504
2719
9301
7102
1309

INDEX	PART NO.		PART NAME	REC	QTY
01	4349-6806-03	NS	WIRE HARNESS ASSY		1
02	4349-0901-01		SOLID STATE SWITCH (PC12-FN)		1
03	4643-0752-01		MOTOR ASSY (M6-FN)		1
04	4349-1734-01	NS	BRACKET		1
05	4349-1718-02		GEAR		1
06	1200-3121-09		BUSHING		5
07	4349-1705-01		GEAR		1
08	4349-1733-01	NS	SHAFT		1
09	4349-1706-01		GEAR		1
10	4004-5339-01	NS	BUSHING		1
11	4349-1711-01		ARM		2
12	4349-1710-01		CAM		2
13	4349-1708-01	NS	SHAFT		1
14	4349-1735-01		SHIELD PLATE		1
15	4349-1732-02		PRESSURE SPRING		4
16	4349-1738-01		EARTH GROUND		1
17	4349-1715-01		NEUTRALIZING BRUSH		2
18	4349-1740-01		NEUTRALIZING BRUSH		1
19	4131-2607-01		BALL BEARING		2
20	4349-1703-01		ROLLER		1
21	4349-1736-01		EARTH GROUND		1
22	4349-1714-04		GUIDE		1
23	1200-3121-07		BUSHING		1
24	4349-1739-01		GUIDE		4
25	4349-1603-03	NS	BRACKET		1
26	4349-1605-01		PADDLE		1
27	9314-1201-41		MOTOR (M1-FN)		1
28	4131-3003-01		BUSHING		3
29	4349-1719-01		GEAR		1
30	4349-1613-01		GEAR		1
31	4349-1610-02	NS	SHAFT		1
32	4349-1627-01	NS	BRACKET		1
33	4349-1633-01		GEAR		1
34	4349-7303-01		LABEL		1
35	4349-1636-01		COLLAR		1
36	4349-1631-01		KNOB		1
37	4349-1604-01		GEAR		1
38	4349-1601-01		GEAR		1
39	4349-1602-01		GEAR		1
40	4349-2115-02		COLLAR		1
41	4643-5220-01		TORSION SPRING	RP	1
42	4349-1611-01		GEAR		1
43	4643-5219-03		DRUM		1
44	4349-1638-01	NS	COVER		1
45	9321-2100-41		SOLENOID (SL1-FN)		1
46	4349-1637-01		SPACER		1
47	4163-5293-01		SCREW		4
48	4349-1748-01		CUSHION		4
49	4512-2520-02		BRACKET		1

INDEX	PART NO.	PART NAME	REC	QTY	SFIX

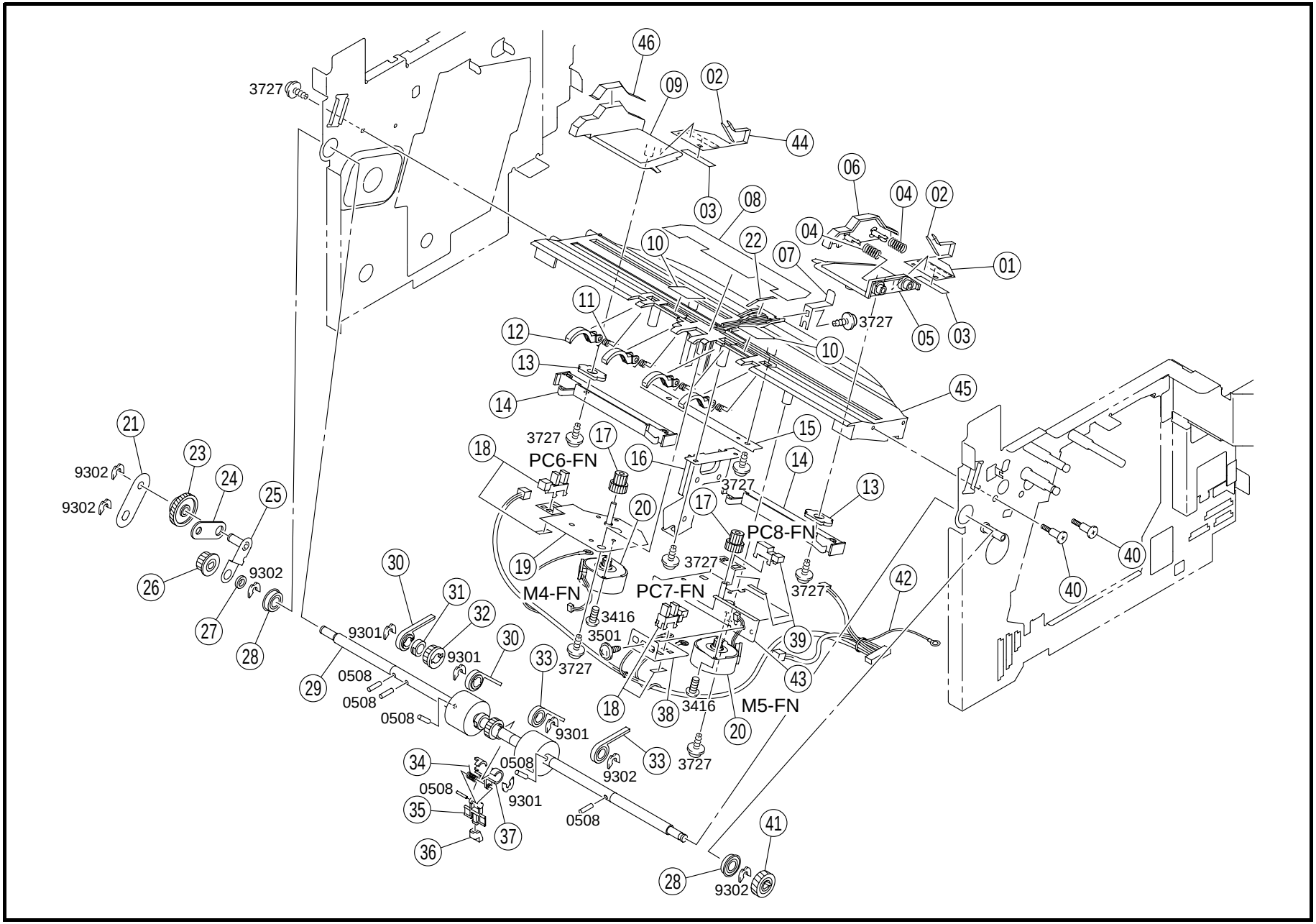
3727
46
09
02
44
03
08
06
04
02
04
10
22
07
01
11
3727
05
03
12
10
13
45
14
3727
17
15
18
PC6-FN
16
14
3727
21
23
9302
24
9302
25
20
17
13
PC8-FN
19
3727
M4-FN
PC7-FN
3727
40
40
42
26
9302
30
31
32
3416
3501
39
27
28
9301
9301
30
33
3727
43
29
0508
0508
0508
18
38
3416
M5-FN
20
9301
34
0508
33
9302
33
3727
0508
35
9301
37
0508
36
41
28
9302

INDEX	PART NO.		PART NAME		REC	QTY
01	4349-1506-03		STOPPER			1
02	4349-1513-01		GUIDE			2
03	4349-1526-01		TAPE			2
04	4643-5404-02		PRESSURE SPRING			2
05	4349-1509-02		PLATE			1
06	4349-1507-01		PLATE			1
07	4349-1521-01		STOPPER			1
08	4349-1512-01		GUIDE			1
09	4349-1520-02		PLATE			1
10	4349-1524-01		GUIDE			2
11	4349-1505-01		TORSION SPRING			4
12	4349-1504-01		GUIDE			4
13	4349-1525-01		SPACER			2
14	4349-1510-01		RACK			2
15	4349-1511-01		SET PLATE			1
16	4349-1518-02	NS	BRACKET			1
17	4349-1516-01		GEAR			2
18	4349-0901-01		SOLID STATE SWITCH	(PC6.7-FN)		2
19	4349-0208-02	NS	BRACKET ASSY			1
20	9314-1201-21		MOTOR	(M4.5-FN)		2
21	4349-1743-01		GUIDE			1
22	4349-1642-01		GUIDE			1
23	4349-1741-01		GEAR			1
24	4349-1723-01		ARM			1
25	4349-0221-01	NS	ARM ASSY			1
26	1500-2513-20		PULLEY			1
27	4349-1742-01		COLLAR			1
28	4004-4540-01		BALL BEARING			2
29	4349-0151-01		ROLLER ASSY			1
30	4349-1744-01		PADDLE			2
31	4490-3448-01		BUSHING			1
32	4349-2024-01		GEAR			1
33	4349-1746-01		PADDLE			2
34	4349-2038-02		TORSION SPRING			1
35	4349-2037-02		ARM			1
36	4349-2036-01		SET PLATE			1
37	4349-1745-01		ARM			1
38	4349-1522-01		BRACKET			1
39	4349-0902-01		SOLID STATE SWITCH	(PC8-FN)		1
40	4643-3007-01		SHOULDER SCREW			2
41	4349-1720-02		GEAR			1
42	4349-6804-01	NS	WIRE HARNESS ASSY			1
43	4349-0207-01	NS	BRACKET ASSY			1
44	4349-1519-02		STOPPER			1
45	4349-1501-02		TRAY			1
46	4349-1527-01		GUIDE			1

INDEX	PART NO.	PART NAME	REC	QTY	SFIX

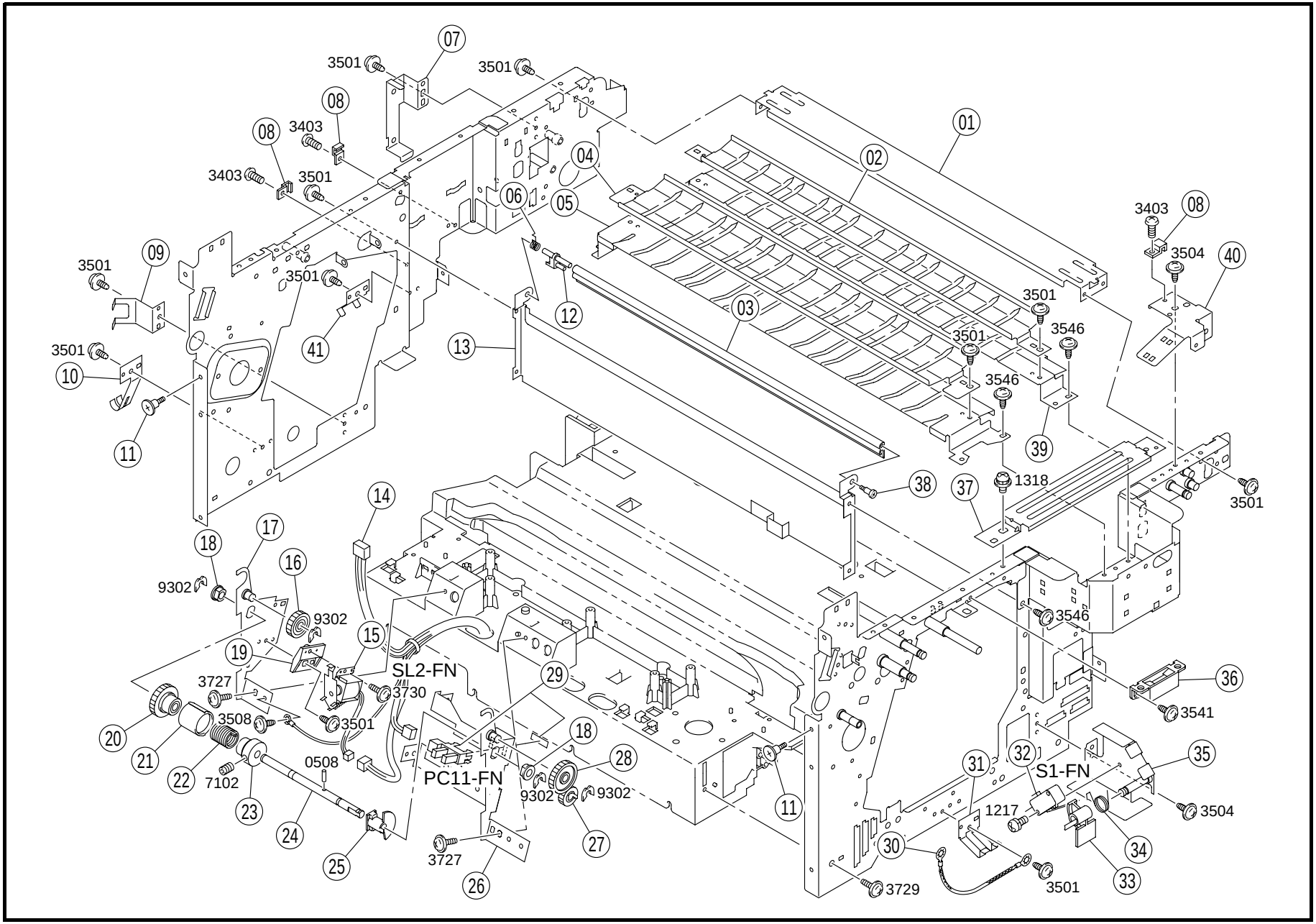
01
02
03
04
05
06
07
08
09
10
11
12
13
14
15
16
17
18
19
20
21
22
23
24
25
26
27
28
29
30
31
32
33
34
35
36
37
38
39
40
41
3501
3403
3504
3546
1318
9302
3727
3730
3508
0508
7102
SL2-FN
PC11-FN
S1-FN
1217
3729
3541

INDEX	PART NO.		PART NAME	REC	QTY
01	4349-1348-01	NS	REINFORCE PLATE		1
02	4349-1305-01	NS	GUIDE		1
03	4349-1845-02		GUIDE		1
04	4349-1306-01	NS	GUIDE		1
05	4349-1336-02	NS	GUIDE		1
06	4349-1846-02		TORSION SPRING		1
07	4349-1112-02	NS	BRACKET		1
08	1021-4707-01		CORD CLAMP		3
09	4349-1206-01		PLATE SPRING		1
10	4349-1215-01		PLATE SPRING		1
11	1054-2601-01		SHOULDER SCREW		2
12	4349-1847-02		MEMBER		1
13	4349-1825-02	NS	BRACKET		1
14	4349-6808-02	NS	WIRE HARNESS ASSY		1
15	9321-2100-41		SOLENOID (SL2-FN)		1
16	4349-2026-01		GEAR		1
17	4349-0205-01	NS	BRACKET ASSY		1
18	4131-3003-01		BUSHING		2
19	4349-2097-02		SPACER		1
20	4643-5208-01		GEAR		1
21	4349-2012-03		DRUM		1
22	4349-2014-01		TORSION SPRING	RP	1
23	4643-5219-03		DRUM		1
24	4349-2015-02	NS	SHAFT		1
25	4349-2010-01		SHIELD PLATE		1
26	4349-0204-01	NS	BRACKET ASSY		1
27	4349-2035-01		GEAR		1
28	4156-3818-01		GEAR 24T		1
29	4349-0901-01		SOLID STATE SWITCH (PC11-FN)		1
30	4349-6813-01	NS	WIRE HARNESS ASSY		1
31	4349-1213-01		PLATE SPRING		1
32	9331-2200-21		MICRO-SWITCH (S1-FN)		1
33	4643-2119-02		ACTUATOR		1
34	4643-2112-01		TORSION SPRING		1
35	4349-0211-02	NS	BRACKET ASSY		1
36	4425-3366-01		MAGNET CATCH		1
37	4349-1106-02	NS	BRACKET		1
38	4349-1848-01		SHOULDER SCREW		1
39	4349-1335-02	NS	GUIDE		1
40	4349-1016-01	NS	BRACKET		1
41	4349-1202-02		PLATE SPRING		1

INDEX	PART NO.	PART NAME	REC	QTY	SFIX

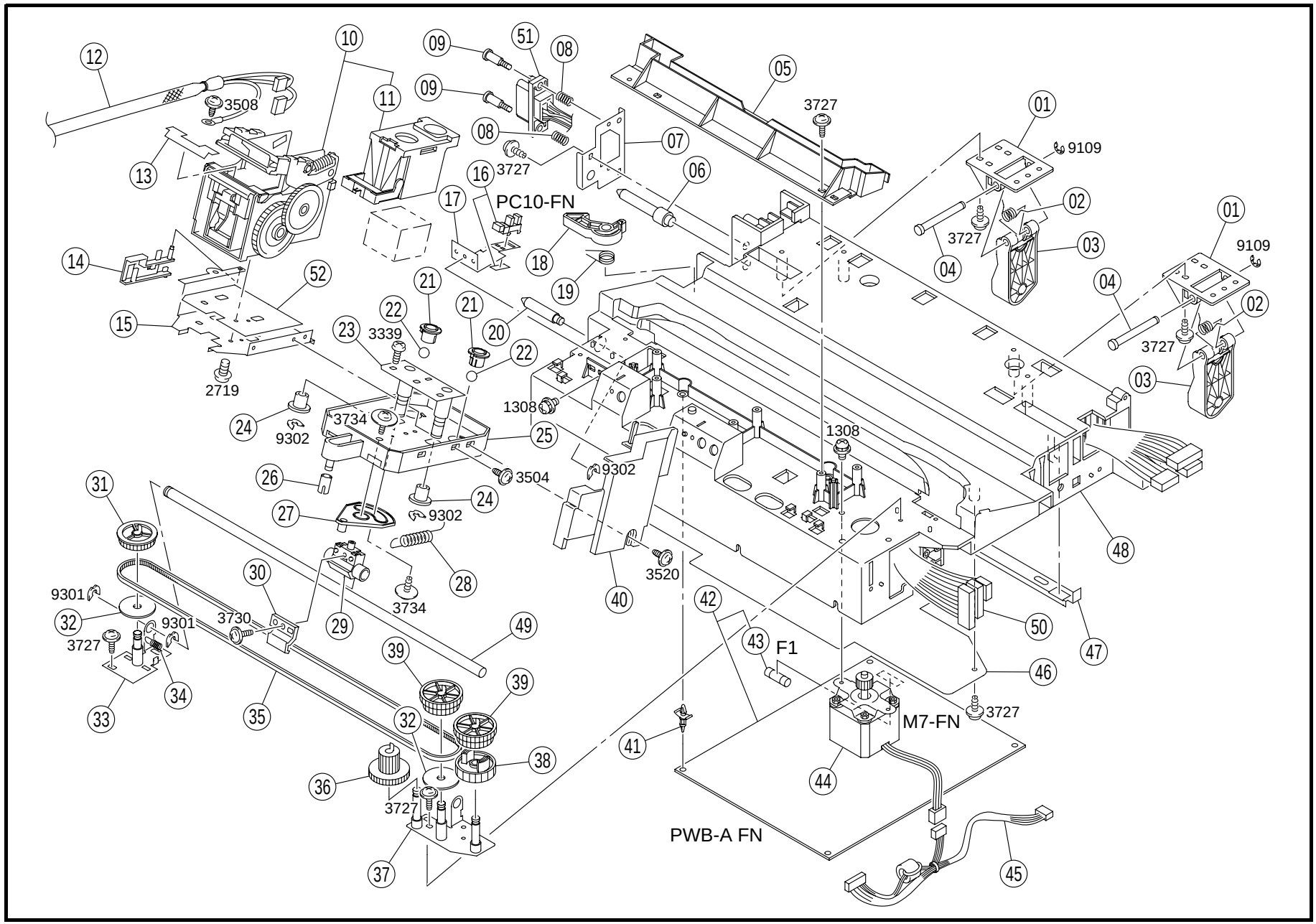
12
10
09
51
08
05
3727
01
9109
3508
11
09
08
07
13
16
3727
06
02
17
PC10-FN
3727
03
01
9109
14
18
19
04
04
52
21
21
20
02
15
22
3339
23
22
3727
03
2719
1308
24
3734
25
1308
9302
9302
26
3504
24
31
27
9302
48
28
3520
40
30
9301
3734
42
49
32
29
9301
3730
43
F1
50
47
3727
39
46
39
34
33
35
32
M7-FN
3727
41
38
44
36
3727
PWB-A FN
37
45

INDEX	PART NO.		PART NAME		REC	QTY
01	4349-1108-02		BRACKET			2
02	4349-1111-01		TORSION SPRING			2
03	4349-1110-01		LEVER			2
04	4349-1109-01		SHAFT			2
05	4349-1836-02		RAIL			1
06	4349-1201-01		PIN			1
07	4349-1207-02	NS	BRACKET			1
08	4349-1208-01		PRESSURE SPRING			2
09	4349-1214-01		SHOULDER SCREW			2
10	4643-5601-01		STAPLER UNIT			1
11	4643-7802-01		STAPLE CARTRIDGE			1
12	4349-6805-03	NS	WIRE HARNESS ASSY			1
13	4349-1819-02		GUIDE			1
14	4349-1832-02		BRACKET			1
15	4349-1804-03	NS	BRACKET			1
16	4349-0901-01		SOLID STATE SWITCH	(PC10-FN)		1
17	4349-1823-01	NS	BRACKET			1
18	4349-1203-01		PAWL			1
19	4349-1204-01		TORSION SPRING			1
20	4349-1209-01		PIN			1
21	4349-1813-01		HOLDER			2
22	4349-1842-01		ROLL			2
23	4349-0202-02	NS	ADJUSTING PLATE ASSY			1
24	4349-1817-01		COLLAR			2
25	4349-1801-03		BASE FRAME			1
26	4349-1824-01		COLLAR			1

INDEX	PART NO.		PART NAME		REC	QTY
27	4349-1840-01		GUIDE			1
28	4349-1841-01		TENSION SPRING			1
29	4349-1807-03		HOLDER			1
30	4349-1808-02		HOLDER			1
31	4349-1811-01		PULLEY			1
32	4349-1849-01		FLANGE			2
33	4349-0201-02	NS	BRACKET ASSY			1
34	4349-1820-01		TENSION SPRING			1
35	4349-1806-01		TIMING BELT			1
36	4349-1818-01		GEAR			1
37	4349-0203-02	NS	BRACKET ASSY			1
38	4349-1809-02		KNOB			1
39	4349-1812-02		PULLEY ASSY			2
40	4349-1803-03		COVER			1
41	9384-1900-57		PWB SUPPORT 9.53H			4
42	4349-0101-03		PWB ASSY	(PWB-A FN)	RP	1
43	9346-3910-41		FUSE	(F1)		1
44	9314-1201-41		MOTOR	(M7-FN)		1
45	4349-6807-02	NS	WIRE HARNESS ASSY			1
46	4349-1104-01		COVER			1
47	4349-1205-02		ARM			1
48	4349-1103-03	NS	FRAME			1
49	4349-1802-01	NS	SHAFT			1
50	4349-6802-03	NS	WIRE HARNESS ASSY			1
51	4349-6801-01		WIRE HARNESS ASSY			1
52	4349-1850-01	NS	SPACER			1

INDEX	PART NO.	PART NAME	REC	QTY	SFIX

8 ELEVATOR SECTION (A) FN-117

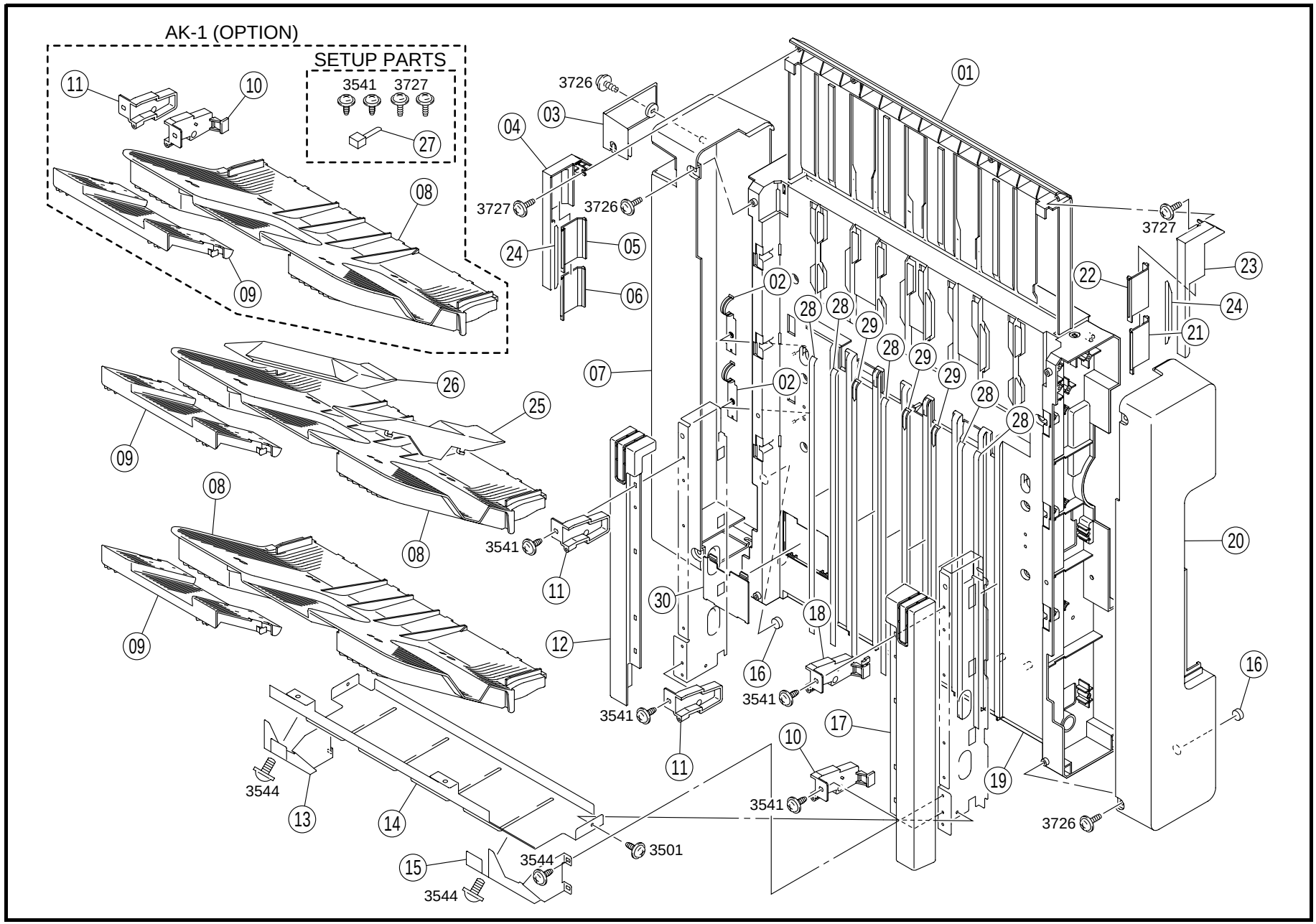

INDEX	PART NO.	PART NAME	REC	QTY
01	4349-2016-03	GUIDE		1
02	4349-2017-02	EARTH GROUND		2
03	4349-1011-04	COVER		1
04	4349-2104-03	COVER		1
05	4349-2112-03	COVER		1
06	4349-2113-01	COVER		1
07	4349-1004-04	COVER		1
08	4349-2008-03	TRAY		3
09	4349-2009-02	TRAY		3
10	4349-2023-01	HOLDER		2
11	4349-2032-01	HOLDER		3
12	4349-2003-02	COVER		1
13	4349-2110-01	BRACKET		1
14	4349-2022-01	BRACKET		1
15	4349-2109-01	BRACKET		1
16	4643-1009-02	STOPPER		2
17	4349-2002-02	COVER		1
18	4349-2025-02	HOLDER		1
19	4349-2001-15 NS	FRAME		1
20	4349-1003-05	COVER		1
21	4349-2103-01	COVER		1
22	4349-2102-03	COVER		1
23	4349-2101-03	COVER		1
24	4349-2118-01	GUIDE		2
25	4349-2116-01	GUIDE		1
26	4349-2117-01	GUIDE		1
27	4349-6814-01	WIRE HARNESS ASSY		1
28	4349-2119-01	GUIDE		5
29	4349-2120-01	GUIDE		3
30	4349-2121-01	COVER		1

INDEX	PART NO.	PART NAME	REC	QTY	SFIX

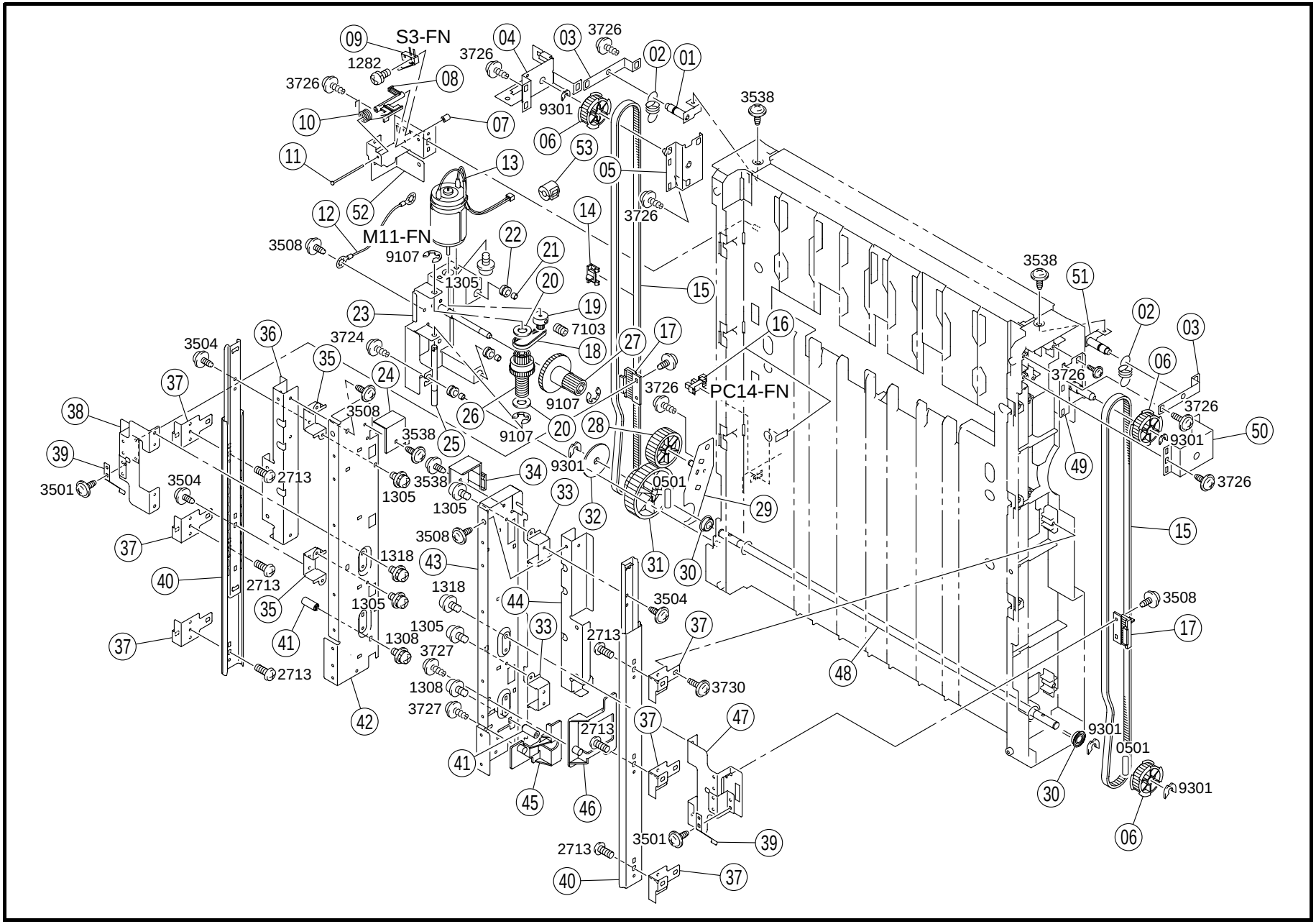
S3-FN
M11-FN
PC14-FN

INDEX	PART NO.		PART NAME		REC	QTY
01	4349-0212-01	NS	BRACKET ASSY			1
02	4349-2066-01		TENSION SPRING			2
03	4349-2063-01		BRACKET			2
04	4349-2069-01	NS	BRACKET			1
05	4349-0219-02	NS	BRACKET ASSY			1
06	4349-2056-01		PULLEY			3
07	1200-2105-06		RETAINING RING			1
08	4349-2062-02		ACTUATOR			1
09	9331-2200-31		MICRO-SWITCH	(S3-FN)		1
10	4349-2072-01		TORSION SPRING			1
11	1200-5213-04		SHAFT			1
12	4349-6810-02	NS	WIRE HARNESS ASSY			1
13	4349-0752-01		MOTOR ASSY	(M11-FN)		1
14	4349-2067-01		LEVER			1
15	4349-2049-01		TIMING BELT			2
16	4349-0901-01		SOLID STATE SWITCH	(PC14-FN)		1
17	4349-2046-02		BRACKET			2
18	4470-4342-01		TIMING BELT			1
19	4643-4513-03		PULLEY			1
20	1200-1342-03		WASHER			2
21	1139-1625-01		SLEEVE			3
22	1139-1620-01		RETAINING RING			3
23	4349-0214-03	NS	BRACKET ASSY			1
24	4349-2034-01		COVER			1
25	4643-4511-01	NS	SHAFT			1
26	4611-4609-01		PULLEY 29T			1
27	4349-2053-01		GEAR			1
28	4349-2055-01		GEAR			1
29	4349-0217-02	NS	BRACKET ASSY			1
30	4131-2607-01		BALL BEARING			2
31	4349-2054-01		GEAR			1
32	4643-4527-01		FLANGE			1
33	4349-2030-01	NS	BRACKET			2
34	4349-2033-01		COVER			1
35	4349-2031-01	NS	BRACKET			2
36	4349-2029-01	NS	REINFORCE PLATE			1
37	4349-2005-02		BRACKET			6
38	4349-2020-02	NS	BRACKET			1
39	4349-2065-01		PLATE SPRING			2
40	4349-2004-01		RAIL			2
41	4349-2006-02		SHAFT			2
42	4349-2019-01	NS	BRACKET			1
43	4349-2018-02	NS	BRACKET			1
44	4349-2028-01	NS	REINFORCE PLATE			1
45	4349-2058-01		BRACKET			1
46	4349-2059-01		BRACKET			1
47	4349-2093-01	NS	BRACKET			1
48	4349-2052-01	NS	SHAFT			1
49	4349-0218-02	NS	BRACKET ASSY			1
50	4349-2068-01	NS	BRACKET			1
51	4349-0213-01	NS	BRACKET ASSY			1
52	4349-2044-01	NS	BRACKET			1
53	9326-1410-81		FERRITE CORE			1

INDEX	PART NO.	PART NAME	REC	QTY	SFIX

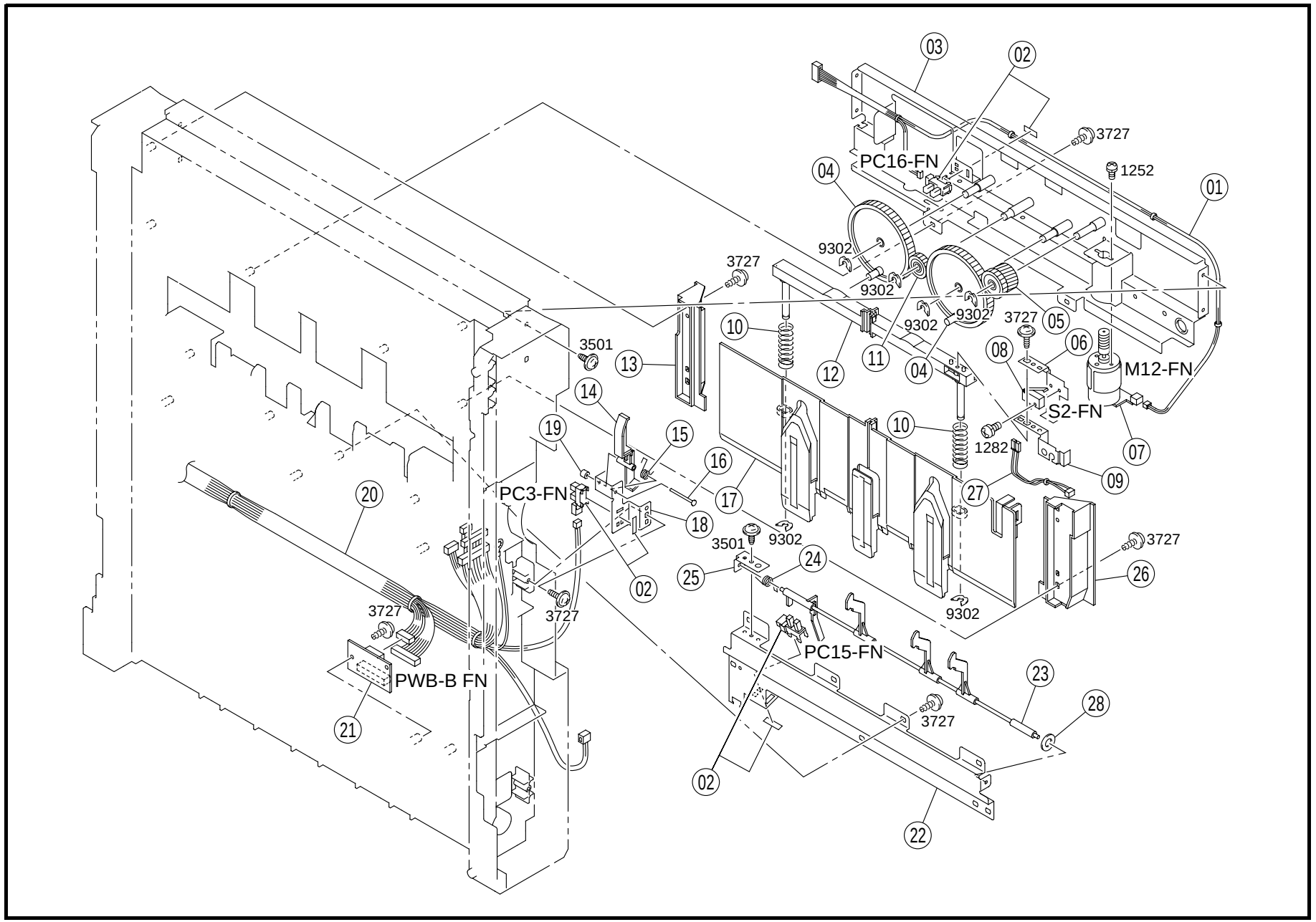
03
02
3727
PC16-FN
1252
04
01
9302
3727
9302
9302
9302
3727
05
3501
10
13
12
11
04
08
06
M12-FN
14
S2-FN
19
15
10
1282
07
16
09
20
PC3-FN
17
27
18
3501
9302
3727
25
24
26
02
3727
3727
9302
PC15-FN
PWB-B FN
23
28
3727
21
02
22

INDEX	PART NO.		PART NAME		REC	QTY
01	4349-6811-03	NS	WIRE HARNESS ASSY			1
02	4349-0901-01		SOLID STATE SWITCH	(PC3.15.16-FN)		3
03	4349-0220-03	NS	BRACKET ASSY			1
04	4349-2091-01		GEAR			2
05	4643-5209-01		GEAR			1
06	4349-2098-02	NS	BRACKET			1
07	4643-0752-01		MOTOR ASSY	(M12-FN)		1
08	9331-2200-31		MICRO-SWITCH	(S2-FN)		1
09	4349-2099-02	NS	COVER			1
10	4349-2092-01		PRESSURE SPRING			2
11	1300-3122-21		GEAR 20T			1
12	4349-2083-02		BRACKET			1
13	4349-2090-01		RAIL			1
14	4349-2060-01		ACTUATOR			1
15	4349-2071-01		TORSION SPRING			1
16	4425-3039-01		SHAFT			1
17	4349-2081-04		SHUTTER			1
18	4349-2051-01	NS	BRACKET			1
19	1200-2105-06		RETAINING RING			1
20	4349-6809-03	NS	WIRE HARNESS ASSY			1
21	4349-0102-01		PWB ASSY	(PWB-B FN)		1
22	4349-2045-01	NS	BRACKET			1
23	4349-2061-02		ACTUATOR			1
24	4349-2070-03		TORSION SPRING			1
25	4349-2107-01	NS	BRACKET			1
26	4349-2082-02		RAIL			1
27	4349-6812-02	NS	WIRE HARNESS ASSY			1
28	1200-1232-02		WASHER			1

INDEX	PART NO.	PART NAME	REC	QTY	SFIX

11 WIRING ACCESSORIES AND JIGS FN-117

⑴ 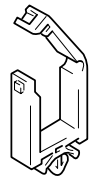	⑺ 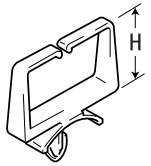	⑿ 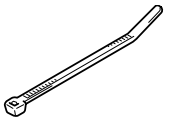					
⑵ 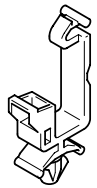	⑻ 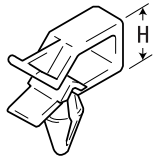						
⑶, ⑷ 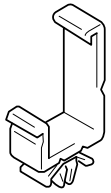	⑼ 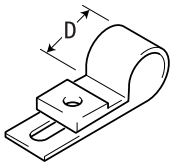						
⑸ 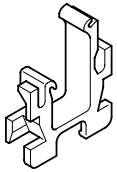	⑽ 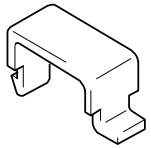						
⑹ 	⑾ 						

INDEX	PART NO.	PART NAME	REC	QTY	INDEX	PART NO.	PART NAME	REC	QTY
01	9384-1310-11	WIRING SADDLE 5.2H		11					
02	9384-1100-91	WIRING SADDLE		12					
03	9384-1310-91	WIRING SADDLE 18.5H		15					
04	9384-1311-21	WIRING SADDLE 16.8H		13					
05	9384-2710-42	EDGE COVER		1					
06	9384-2010-21	EDGE COVER 8.5H		10					
07	9384-1310-81	WIRING SADDLE 6.4H		7					
08	9384-1820-31	WIRING SADDLE 8.0H		1					
09	9384-1600-11	P-CLIP 10D		5					
10	1053-4432-01	CORD CLAMP		7					
11	9384-1510-21	CABLE TIE 143L		1					
12	0989-6763-01	CABLE TIE		1					

INDEX	PART NO.	PART NAME	REC	QTY	SFIX

12 SCREWS AND WASHERS FN-117

INDEX	PART NO.	PART NAME	ILLUST
0501 0508	9752-3016-50 9752-2010-50	PIN	
1217 1252 1282	9644-0316-13 9644-2605-13 9644-2310-13	SCREW	
1305 1308 1309 1312 1318	9646-0306-13 9646-0308-13 9646-0310-13 9646-0316-13 9646-0408-13	SCREW	
2713 2719	9654-0306-14 9654-0308-14	SCREW	
3339	9732-0306-14	TAPPING SCREW	
3403 3416	9733-0308-13 9733-0308-07	TAPPING SCREW	
3501 3504 3508 3520 3538 3541 3544 3546	9735-0306-13 9735-0308-13 9735-0408-13 9735-0314-13 9735-0408-14 9735-0308-14 9735-0306-14 4106-2063-01	TAPPING SCREW	
3701 3724 3726 3727 3729 3730 3734	9739-0408-13 9739-0412-14 9739-0408-14 9739-0308-14 9739-0410-14 9739-0306-14 1250-2301-01	TAPPING SCREW	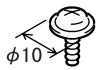

INDEX	PART NO.	PART NAME	ILLUST
7102 7103	9684-0304-08 9684-0306-08	SET SCREW	
9107 9109 9112	9721-0400-01 9721-0500-01 9721-0600-01	RETAINING RING	
9301 9302 9303	1066-1151-01 4425-3001-01 4425-3002-01	RETAINING RING	

INDEX	PART NO.	PART NAME	ILLUST

PART NO.	FIG.	INDEX	QTY		PART NO.	FIG.	INDEX	QTY		PART NO.	FIG.	INDEX	QTY		PART NO.	FIG.	INDEX	QTY	
0989-6763-01	11	12	1		4349-1007-04	01	01	1		4349-1348-01	06	01	1		4349-1641-01	02	50	2	
1021-4707-01	06	08	3		4349-1010-04	01	18	1		4349-1351-01	03	14	1		4349-1642-01	05	22	1	
1053-3103-01	01	09	2		4349-1011-04	08	03	1		4349-1352-01	03	38	2		4349-1703-01	04	20	1	
1053-4432-01	11	10	7		4349-1013-03	01	06	1		4349-1353-01	03	15	1		4349-1705-01	04	07	1	
1054-2601-01	06	11	2		4349-1014-04	01	12	1		4349-1356-01	03	13	1		4349-1706-01	04	09	1	
1139-1620-01	09	22	3		4349-1016-01	06	40	1		4349-1359-01	03	39	1		4349-1708-01	04	13	1	
1139-1625-01	09	21	3		4349-1019-01	01	15	3		4349-1361-01	03	37	1		4349-1710-01	04	12	2	
1164-3509-01	03	17	4		4349-1020-02	01	17	1		4349-1362-01	03	40	1		4349-1711-01	04	11	2	
1200-1232-02	10	28	1		4349-1021-02	01	07	1		4349-1375-01	02	17	1		4349-1714-04	04	22	1	
1200-1342-03	09	20	2		4349-1024-01	01	02	1		4349-1376-01	02	18	1		4349-1715-01	04	17	2	
1200-2105-06	09	07	1		4349-1103-03	07	48	1		4349-1377-01	02	16	1		4349-1718-02	04	05	1	
1200-2105-06	10	19	1		4349-1104-01	07	46	1		4349-1378-01	02	13	1		4349-1719-01	04	29	1	
1200-3121-07	02	01	2		4349-1105-03	01	05	1		4349-1379-01	02	14	1		4349-1720-02	05	41	1	
1200-3121-07	04	23	1		4349-1106-02	06	37	1		4349-1380-01	02	15	2		4349-1723-01	05	24	1	
1200-3121-09	04	06	5		4349-1108-02	07	01	2		4349-1384-01	02	05	4		4349-1732-02	04	15	4	
1200-5213-04	09	11	1		4349-1109-01	07	04	2		4349-1386-01	02	06	4		4349-1733-01	04	08	1	
1273-3003-01	03	05	1		4349-1110-01	07	03	2		4349-1387-04	02	41	1		4349-1734-01	04	04	1	
1274-3602-02	02	46	1		4349-1111-01	07	02	2		4349-1388-02	02	22	1		4349-1735-01	04	14	1	
1274-3602-02	03	43	1		4349-1112-02	06	07	1		4349-1391-03	03	45	1		4349-1736-01	04	21	1	
1300-3122-21	10	11	1		4349-1201-01	07	06	1		4349-1392-01	02	09	2		4349-1738-01	04	16	1	
1500-2513-20	05	26	1		4349-1202-02	06	41	1		4349-1393-01	03	46	1		4349-1739-01	04	24	4	
1500-2660-13	03	41	2		4349-1203-01	07	18	1		4349-1501-02	05	45	1		4349-1740-01	04	18	1	
4002-2581-01	01	22	1		4349-1204-01	07	19	1		4349-1504-01	05	12	4		4349-1741-01	05	23	1	
4004-4540-01	05	28	2		4349-1205-02	07	47	1		4349-1505-01	05	11	4		4349-1742-01	05	27	1	
4004-5339-01	02	30	2		4349-1206-01	06	09	1		4349-1506-03	05	01	1		4349-1743-01	05	21	1	
4004-5339-01	04	10	1		4349-1207-02	07	07	1		4349-1507-01	05	06	1		4349-1744-01	05	30	2	
4109-6301-02	02	53	1		4349-1208-01	07	08	2		4349-1509-02	05	05	1		4349-1745-01	05	37	1	
4131-2607-01	04	19	2		4349-1209-01	07	20	1		4349-1510-01	05	14	2		4349-1746-01	05	33	2	
4131-2607-01	09	30	2		4349-1212-01	01	10	1		4349-1511-01	05	15	1		4349-1748-01	04	48	4	
4131-3003-01	02	12	2		4349-1213-01	06	31	1		4349-1512-01	05	08	1		4349-1801-03	07	25	1	
4131-3003-01	04	28	3		4349-1214-01	07	09	2		4349-1513-01	05	02	2		4349-1802-01	07	49	1	
4131-3003-01	06	18	2		4349-1215-01	06	10	1		4349-1516-01	05	17	2		4349-1803-03	07	40	1	
4156-3818-01	06	28	1		4349-1301-02	03	08	1		4349-1518-02	05	16	1		4349-1804-03	07	15	1	
4163-5293-01	04	47	4		4349-1302-02	03	04	1		4349-1519-02	05	44	1		4349-1806-01	07	35	1	
4349-0101-03	07	42	1		4349-1303-02	03	34	1		4349-1520-02	05	09	1		4349-1807-03	07	29	1	
4349-0102-01	10	21	1		4349-1304-02	03	25	1		4349-1521-01	05	07	1		4349-1808-02	07	30	1	
4349-0151-01	05	29	1		4349-1305-01	06	02	1		4349-1522-01	05	38	1		4349-1809-02	07	38	1	
4349-0201-02	07	33	1		4349-1306-01	06	04	1		4349-1524-01	05	10	2		4349-1811-01	07	31	1	
4349-0202-02	07	23	1		4349-1308-02	02	25	1		4349-1525-01	05	13	2		4349-1812-02	07	39	2	
4349-0203-02	07	37	1		4349-1309-01	02	08	1		4349-1526-01	05	03	2		4349-1813-01	07	21	2	
4349-0204-01	06	26	1		4349-1310-03	03	28	1		4349-1527-01	05	46	1		4349-1817-01	07	24	2	
4349-0205-01	06	17	1		4349-1311-01	03	01	2		4349-1601-01	04	38	1		4349-1818-01	07	36	1	
4349-0206-02	02	42	1		4349-1312-02	03	10	1		4349-1602-01	04	39	1		4349-1819-02	07	13	1	
4349-0207-01	05	43	1		4349-1313-01	02	39	1		4349-1603-03	04	25	1		4349-1820-01	07	34	1	
4349-0208-02	05	19	1		4349-1314-02	03	11	1		4349-1604-01	04	37	1		4349-1823-01	07	17	1	
4349-0211-02	06	35	1		4349-1315-02	03	30	4		4349-1605-01	04	26	1		4349-1824-01	07	26	1	
4349-0212-01	09	01	1		4349-1316-01	02	26	1		4349-1608-01	02	48	1		4349-1825-02	06	13	1	
4349-0213-01	09	51	1		4349-1317-01	02	38	1		4349-1610-02	04	31	1		4349-1832-02	07	14	1	
4349-0214-03	09	23	1		4349-1318-01	02	28	1		4349-1611-01	04	42	1		4349-1836-02	07	05	1	
4349-0215-03	01	11	1		4349-1319-01	02	02	1		4349-1613-01	04	30	1		4349-1840-01	07	27	1	
4349-0217-02	09	29	1		4349-1320-03	02	27	1		4349-1614-01	02	49	1		4349-1841-01	07	28	1	
4349-0218-02	09	49	1		4349-1321-01	02	20	4		4349-1615-01	02	45	1		4349-1842-01	07	22	2	
4349-0219-02	09	05	1		4349-1323-01	02	04	1		4349-1616-02	02	23	1		4349-1845-02	06	03	1	
4349-0220-03	10	03	1		4349-1325-01	02	10	2		4349-1618-02	02	34	1		4349-1846-02	06	06	1	
4349-0221-01	05	25	1		4349-1327-01	03	33	1		4349-1620-01	02	32	1		4349-1847-02	06	12	1	
4349-0752-01	09	13	1		4349-1328-02	03	23	4		4349-1621-01	02	37	1		4349-1848-01	06	38	1	
4349-0901-01	04	02	1		4349-1332-01	02	11	1		4349-1623-01	02	29	2		4349-1849-01	07	32	2	
4349-0901-01	05	18	2		4349-1333-01	03	07	4		4349-1625-01	02	40	1		4349-1850-01	07	52	1	
4349-0901-01	06	29	1		4349-1335-02	06	39	1		4349-1626-01	02	24	1		4349-2001-15	08	19	1	
4349-0901-01	07	16	1		4349-1336-02	06	05	1		4349-1627-01	04	32	1		4349-2002-02	08	17	1	
4349-0901-01	09	16	1		4349-1337-01	03	29	1		4349-1631-01	04	36	1		4349-2003-02	08	12	1	
4349-0901-01	10	02	3		4349-1338-01	03	16	2		4349-1632-03	02	35	1		4349-2004-01	09	40	2	
4349-0902-01	02	03	1		4349-1340-02	02	33	1		4349-1633-01	04	33	1		4349-2005-02	09	37	6	
4349-0902-01	03	31	1		4349-1341-04	03	21	1		4349-1634-02	02	36	1		4349-2006-02	09	41	2	
4349-0902-01	05	39	1		4349-1342-01	03	19	1		4349-1635-02	02	31	1		4349-2008-03	08	08	3	
4349-1001-04	01	14	1		4349-1343-01	03	27	2		4349-1636-01	04	35	1		4349-2009-02	08	09	3	
4349-1003-05	08	20	1		4349-1344-01	03	09	2		4349-1637-01	04	46	1		4349-2010-01	06	25	1	
4349-1004-04	08	07	1		4349-1345-02	03	26	2		4349-1638-01	04	44	1		4349-2012-03	06	21	1	
4349-1005-05	01	04	1		4349-1346-01	03	32	1		4349-1639-01	02	43	1		4349-2014-01	06	22	1	
4349-1006-03	01	03	1		4349-1347-02	03	35	1		4349-1640-01	02	44	3		4349-2015-02	06	24	1	

PART NO.	FIG.	INDEX	QTY		PART NO.	FIG.	INDEX	QTY		PART NO.	FIG.	INDEX	QTY		PART NO.	FIG.	INDEX	QTY	
4349-2016-03	08	01	1		4349-2121-01	08	30	1		9331-2200-31	10	08	1						
4349-2017-02	08	02	2		4349-6801-01	07	51	1		9346-3910-41	07	43	1						
4349-2018-02	09	43	1		4349-6802-03	07	50	1		9384-1100-91	11	02	12						
4349-2019-01	09	42	1		4349-6803-01	03	18	1		9384-1310-11	11	01	11						
4349-2020-02	09	38	1		4349-6804-01	05	42	1		9384-1310-81	11	07	7						
4349-2022-01	08	14	1		4349-6805-03	07	12	1		9384-1310-91	11	03	15						
4349-2023-01	08	10	2		4349-6806-03	04	01	1		9384-1311-21	11	04	13						
4349-2024-01	05	32	1		4349-6807-02	07	45	1		9384-1510-21	11	11	1						
4349-2025-02	08	18	1		4349-6808-02	06	14	1		9384-1600-11	11	09	5						
4349-2026-01	06	16	1		4349-6809-03	10	20	1		9384-1820-31	11	08	1						
4349-2028-01	09	44	1		4349-6810-02	09	12	1		9384-1900-57	07	41	4						
4349-2029-01	09	36	1		4349-6811-03	10	01	1		9384-2010-21	11	06	10						
4349-2030-01	09	33	2		4349-6812-02	10	27	1		9384-2710-42	11	05	1						
4349-2031-01	09	35	2		4349-6813-01	06	30	1											
4349-2032-01	08	11	3		4349-6814-01	08	27	1											
4349-2033-01	09	34	1		4349-7301-01	03	44	1											
4349-2034-01	09	24	1		4349-7302-01	02	47	1											
4349-2035-01	06	27	1		4349-7303-01	04	34	1											
4349-2036-01	05	36	1		4349-7304-01	03	02	1											
4349-2037-02	05	35	1		4349-7305-01	03	22	1											
4349-2038-02	05	34	1		4349-7306-01	02	52	1											
4349-2044-01	09	52	1		4349-7307-02	01	16	1											
4349-2045-01	10	22	1		4349-7308-01	01	20	1											
4349-2046-02	09	17	2		4349-7309-01	01	13	1											
4349-2049-01	09	15	2		4349-7310-01	01	21	1											
4349-2051-01	10	18	1		4425-3039-01	10	16	1											
4349-2052-01	09	48	1		4425-3249-02	03	03	1											
4349-2053-01	09	27	1		4425-3366-01	01	23	1											
4349-2054-01	09	31	1		4425-3366-01	06	36	1											
4349-2055-01	09	28	1		4426-2607-01	01	19	1											
4349-2056-01	09	06	3		4426-4411-02	02	19	4											
4349-2058-01	09	45	1		4470-4342-01	09	18	1											
4349-2059-01	09	46	1		4475-3601-01	03	24	1											
4349-2060-01	10	14	1		4490-3448-01	05	31	1											
4349-2061-02	10	23	1		4512-2520-02	04	49	1											
4349-2062-02	09	08	1		4611-4609-01	09	26	1											
4349-2063-01	09	03	2		4643-0752-01	04	03	1											
4349-2065-01	09	39	2		4643-0752-01	10	07	1											
4349-2066-01	09	02	2		4643-1009-02	08	16	2											
4349-2067-01	09	14	1		4643-1020-02	01	08	1											
4349-2068-01	09	50	1		4643-2112-01	06	34	1											
4349-2069-01	09	04	1		4643-2119-02	06	33	1											
4349-2070-03	10	24	1		4643-3007-01	03	36	2											
4349-2071-01	10	15	1		4643-3007-01	05	40	2											
4349-2072-01	09	10	1		4643-3031-01	03	06	4											
4349-2081-04	10	17	1		4643-3073-03	02	51	1											
4349-2082-02	10	26	1		4643-4511-01	09	25	1											
4349-2083-02	10	12	1		4643-4513-03	09	19	1											
4349-2090-01	10	13	1		4643-4527-01	09	32	1											
4349-2091-01	10	04	2		4643-5208-01	06	20	1											
4349-2092-01	10	10	2		4643-5209-01	10	05	1											
4349-2093-01	09	47	1		4643-5219-03	04	43	1											
4349-2097-02	06	19	1		4643-5219-03	06	23	1											
4349-2098-02	10	06	1		4643-5220-01	04	41	1											
4349-2099-02	10	09	1		4643-5404-02	05	04	2											
4349-2101-03	08	23	1		4643-5601-01	07	10	1											
4349-2102-03	08	22	1		4643-7802-01	07	11	1											
4349-2103-01	08	21	1		4658-3516-01	03	12	2											
4349-2104-03	08	04	1		4698-1086-01	02	07	2											
4349-2107-01	10	25	1		9314-1201-11	02	21	1											
4349-2109-01	08	15	1		9314-1201-21	05	20	2											
4349-2110-01	08	13	1		9314-1201-41	03	20	1											
4349-2112-03	08	05	1		9314-1201-41	04	27	1											
4349-2113-01	08	06	1		9314-1201-41	07	44	1											
4349-2115-02	04	40	1		9321-2100-41	04	45	1											
4349-2116-01	08	25	1		9321-2100-41	06	15	1											
4349-2117-01	08	26	1		9322-1000-81	03	42	1											
4349-2118-01	08	24	2		9326-1410-81	09	53	1											
4349-2119-01	08	28	5		9331-2200-21	06	32	1											
4349-2120-01	08	29	3		9331-2200-31	09	09	1											



Copyright

2003 MINOLTA Co., Ltd.

Printed in Japan

Use of this catalog should be strictly supervised to avoid disclosure of confidential information.

MINOLTA Co., Ltd.

4349-7995-21 03071500