MINOLTA

Parts Catalog

The essentials of imaging

JS-203

4347-611

PREFACE

1. The part numbers listed in Parts Catalog are those which were assigned to the parts making up the machine at the time machine was originally introduced onto the market.

2. Parts whose INDEX numbers are shown white against a black background in the illustration are those to be used in only certain market areas. These part numbers are given in the lower half part of the list section. Check the SFIX No. listed in SFIX CHART on page II to find which part number is applicable to your own area.

3. Parts whose INDEX numbers are shown black against a white background in the illustration are those to be used in all market areas. These parts are listed on the upper half part of the list section.

4. If "NS" follows a part number given in the list section, it indicates that we do not keep a stock of the part. The part is not required for ordinary service jobs, either.

5. If "RP" is shown in the REC column of the list section, it indicates that the part is functionally important.

6. In the exploded views in this Parts Catalog the parts (Screws & Washes, etc...) which are indicated with a "four-digit" numbers are listed in numerical order in the section "SCREWS AND WASHERS". Please check these "four-digit" numbers with the part numbers ("ten-digit" numbers) which should be used for ordering the part.

7. All part numbers consist of "ten-digit" which should all be quoted when ordering a part. The price of parts can be obtained by referring to the "Parts Price List" which is separately issued.

8. All infomation contained in this Parts Catalog is subject to change.

CONTENTS

1. JOB TRAY ••••••

1 JOB TRAY JS-203

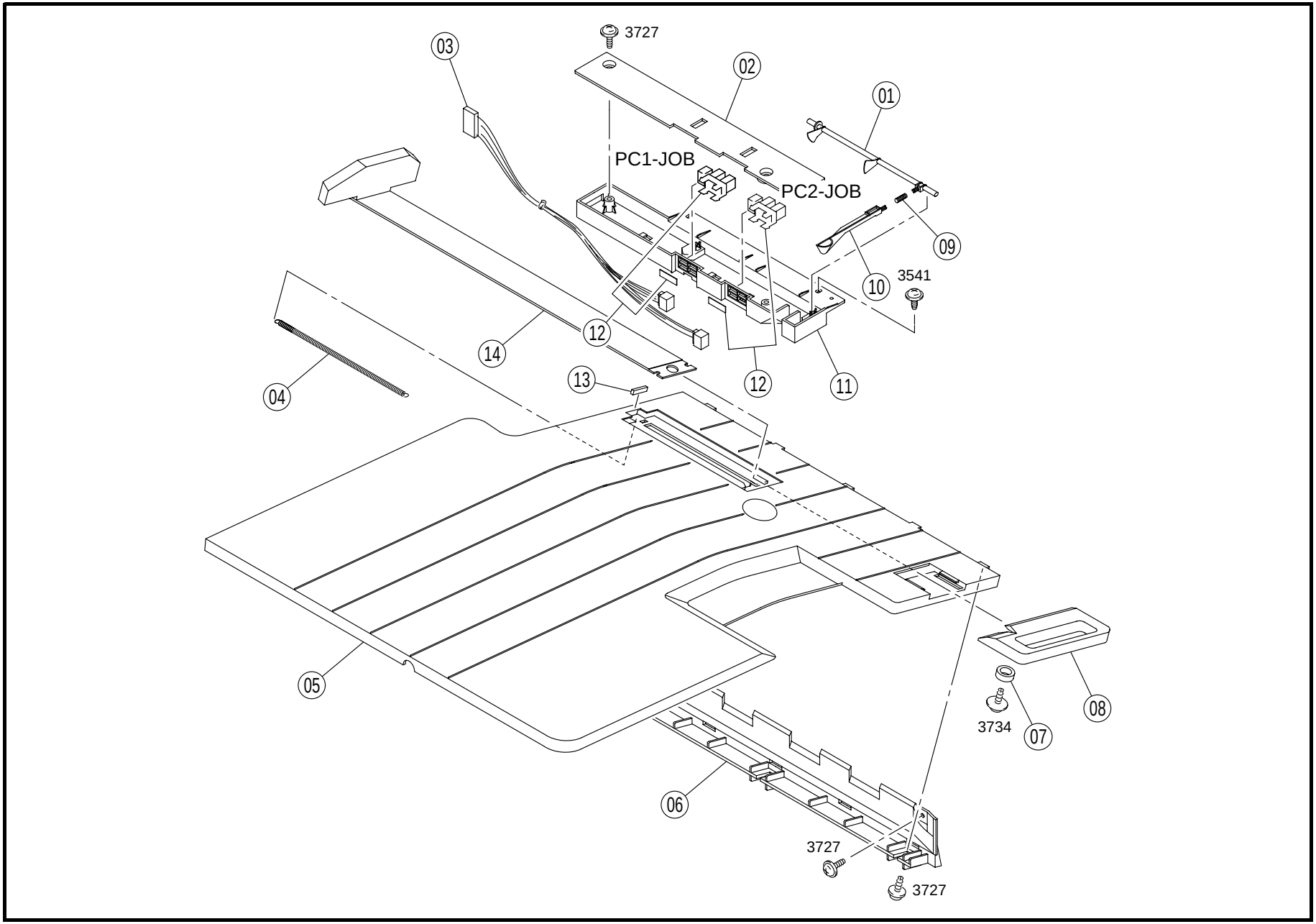

INDEX	PART NO.	PART NAME	REC	QTY	INDEX	PART NO.	PART NAME	REC	QTY
01	4347-4007-03	ACTUATOR		1					
02	4347-4006-02	COVER		1					
03	4347-6801-01	WIRE HARNESS ASSY		1					
04	4347-4003-01	TENSION SPRING		1					
05	4347-4001-02	TRAY		1					
06	4347-4004-02	TRAY		1					
07	4347-4012-01	COLLAR		1					
08	4347-4010-02	HANDLE		1					
09	4347-4005-03	TENSION SPRING		1					
10	4347-4009-03	ACTUATOR		1					
11	4347-4008-03	GUIDE		1					
12	4349-0901-01	SOLID STATE SWITCH (PC1.2-JOB)		2					
13	4347-4011-01	CUSHION		1					
14	4347-4002-02	LEVER		1					

INDEX	PART NO.	PART NAME	REC	QTY	SFIX

2 SCREWS AND WASHERS JS-203

INDEX	PART NO.	PART NAME	ILLUST
3541	9735-0308-14	TAPPING SCREW	
3727 3734	9739-0308-14 1250-2301-01	TAPPING SCREW	

INDEX	PART NO.	PART NAME	ILLUST

INDEX	PART NO.	PART NAME	ILLUST

3 NUMERICAL INDEX JS-203

PART NO.	FIG.	INDEX	QTY		PART NO.	FIG.	INDEX	QTY		PART NO.	FIG.	INDEX	QTY		PART NO.	FIG.	INDEX	QTY	
4347-4001-02	01	05	1																
4347-4002-02	01	14	1																
4347-4003-01	01	04	1																
4347-4004-02	01	06	1																
4347-4005-03	01	09	1																
4347-4006-02	01	02	1																
4347-4007-03	01	01	1																
4347-4008-03	01	11	1																
4347-4009-03	01	10	1																
4347-4010-02	01	08	1																
4347-4011-01	01	13	1																
4347-4012-01	01	07	1																
4347-6801-01	01	03	1																
4349-0901-01	01	12	2																



Copyright

2003 MINOLTA Co., Ltd.

Printed in Japan

Use of this catalog should be strictly supervised to avoid disclosure of confidential information.

MINOLTA Co., Ltd.

4347-7995-21 03061500