MINOLTA

Parts Catalog

The essentials of imaging

MK-1

4510

PREFACE

1. The part numbers listed in Parts Catalog are those which were assigned to the parts making up the machine at the time machine was originally introduced onto the market.

2. Parts whose INDEX numbers are shown white against a black background in the illustration are those to be used in only certain market areas. These part numbers are given in the lower half part of the list section. Check the SFIX No. listed in SFIX CHART on page II to find which part number is applicable to your own area.

3. Parts whose INDEX numbers are shown black against a white background in the illustration are those to be used in all market areas. These parts are listed on the upper half part of the list section.

4. If "NS" follows a part number given in the list section, it indicates that we do not keep a stock of the part. The part is not required for ordinary service jobs, either.

5. If "RP" is shown in the REC column of the list section, it indicates that the part is functionally important.

6. In the exploded views in this Parts Catalog the parts (Screws & Washes, etc...) which are indicated with a "four-digit" numbers are listed in numerical order in the section "SCREWS AND WASHERS". Please check these "four-digit" numbers with the part numbers ("ten-digit" numbers) which should be used for ordering the part.

7. All part numbers consist of "ten-digit" which should all be quoted when ordering a part. The price of parts can be obtained by referring to the "Parts Price List" which is separately issued.

8. All infomation contained in this Parts Catalog is subject to change.

SFIX CHART

SFIX No.	COUNTRY	VOLTAGE	FREQUENCY (Hz)	PAPER SIZE	SFIX No.	COUNTRY	VOLTAGE	FREQUENCY (Hz)	PAPER SIZE
611	JAPAN	100V	50-60HZ	METRIC	612	EXCEPT JAPAN	120V-240V	50-60HZ	INCH/METRIC

CONTENTS

1. HOUSING ••••••

1 HOUSING MK-1

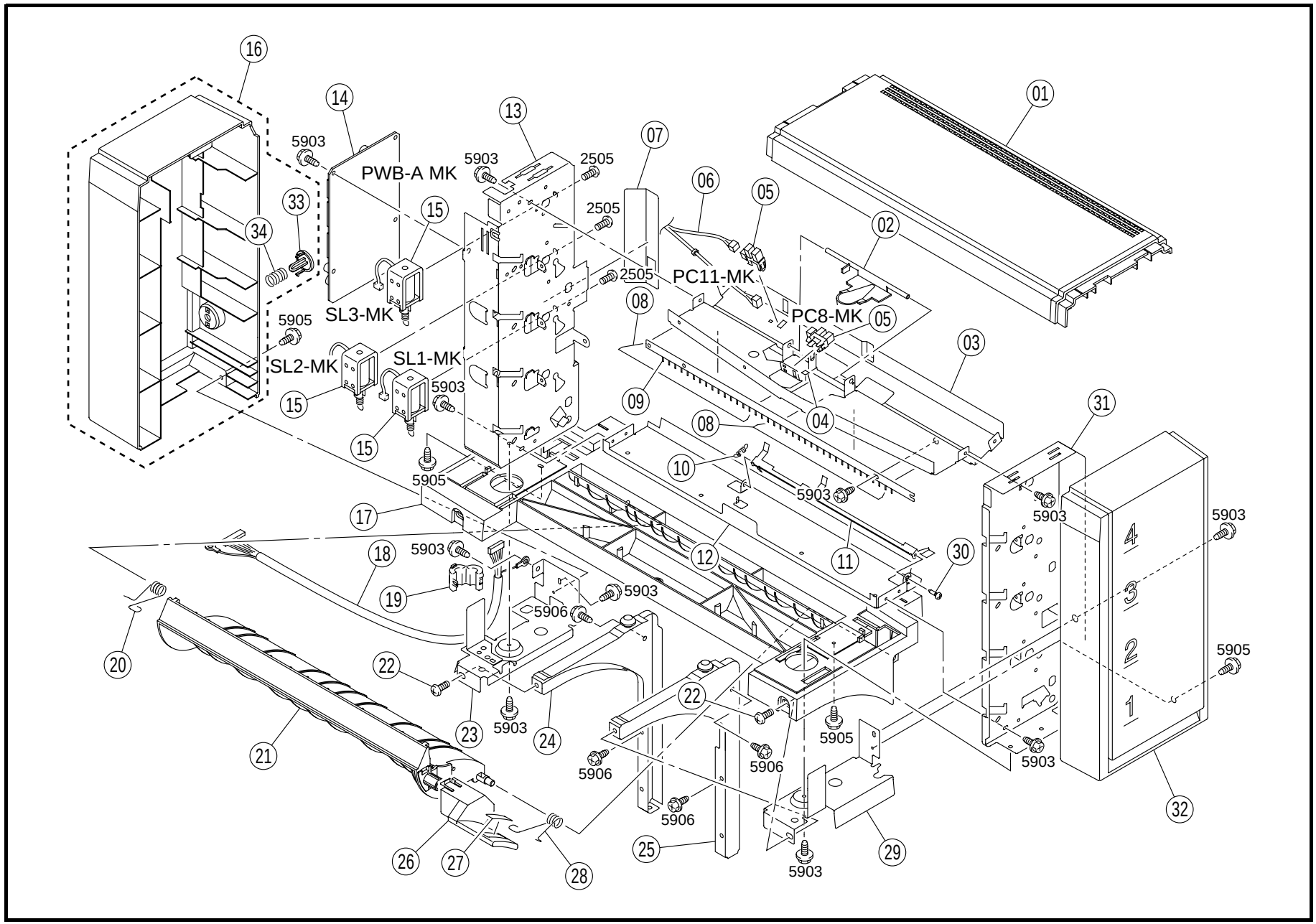

INDEX	PART NO.		PART NAME			REC	QTY
01	4510-5025-01		TOP COVER				1
02	4510-5054-01		ACTUATOR				1
03	4510-5050-01	NS	GUIDE				1
04	4510-5051-01		CUSHION				1
05	4566-5012-01		PHOTO INTERRUPTER		(PC8.11-MK)		2
06	4510-5065-01	NS	WIRE HARNESS ASSY				1
07	4510-5040-01		GUIDE				1
08	4510-5024-01		GUIDE				2
09	4510-5023-01		NEUTRALIZING BRUSH				1
10	4510-5008-01		TENSION SPRING				1
11	4510-5052-01		LEVER				1
12	4510-5063-01	NS	GUIDE				1
13	4510-5062-01	NS	BRACKET				1
14	4510-5059-01		PWB ASSY-PCB	CTRL	(PWB-A MK)	RP	1
15	4510-5060-01		SOLENOID		(SL1-3-MK)		3
16	4510-5027-01		REAR COVER				1
17	4510-5029-01		GUIDE				1
18	4510-5041-01		WIRE HARNESS ASSY				1

INDEX	PART NO.		PART NAME	REC	QTY
19	4510-5003-01		FERRITE CORE		1
20	4510-5031-01		TORSION SPRING		1
21	4510-5028-01		GUIDE		1
22	4510-5044-01		SCREW		2
23	4510-5038-01		BRACKET		1
24	4510-5037-01		BRACKET		1
25	4510-5036-01		BRACKET		1
26	4510-5043-01		HANDLE		1
27	4510-5071-01	NS	SEAL		1
28	4510-5030-01		TORSION SPRING		1
29	4510-5039-01		BRACKET		1
30	4510-5005-01	NS	PIN		1
31	4510-5061-01	NS	BRACKET		1
32	4510-5026-01		FRONT COVER		1
33	4510-5070-01	NS	BUTTON		1
34	4510-5069-01	NS	PRESSURE SPRING		1

INDEX	PART NO.	PART NAME	REC	QTY	SFIX

2 PAPER EXIT SECTION(A) MK-1

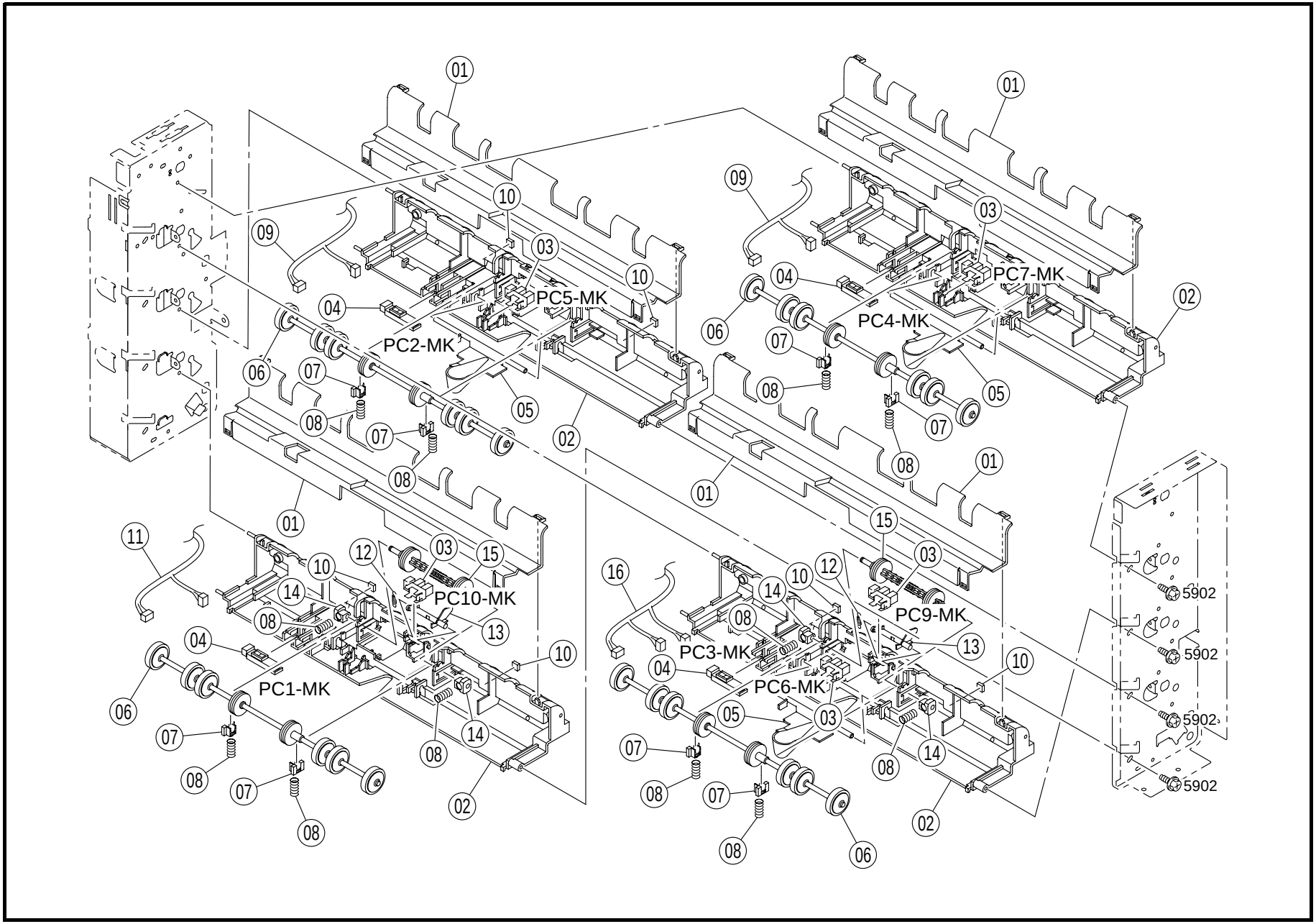

INDEX	PART NO.		PART NAME		REC	QTY
01	4510-5033-01		GUIDE			4
02	4510-5053-01	NS	GUIDE			4
03	4566-5012-01		PHOTO INTERRUPTER	(PC5-7.9.10-MK)		5
04	4510-5021-01		SOLID STATE SWITCH	(PC1-4-MK)		4
05	4510-5054-01		ACTUATOR			3
06	4510-5048-01		ROLLER			4
07	4510-5013-01		BUSHING			8
08	4510-5012-01		PRESSURE SPRING			12
09	4510-5068-01	NS	WIRE HARNESS ASSY			2
10	4510-5056-01		CUSHION			6
11	4510-5067-01	NS	WIRE HARNESS ASSY			1
12	4510-5009-01		TENSION SPRING			2
13	4510-5055-01		ACTUATOR			2
14	4510-5014-01		BUSHING			4
15	4510-5018-01		ROLLER			2
16	4510-5066-01	NS	WIRE HARNESS ASSY			1

INDEX	PART NO.		PART NAME		REC	QTY

SFIX

3 PAPER EXIT SECTION(B) MK-1

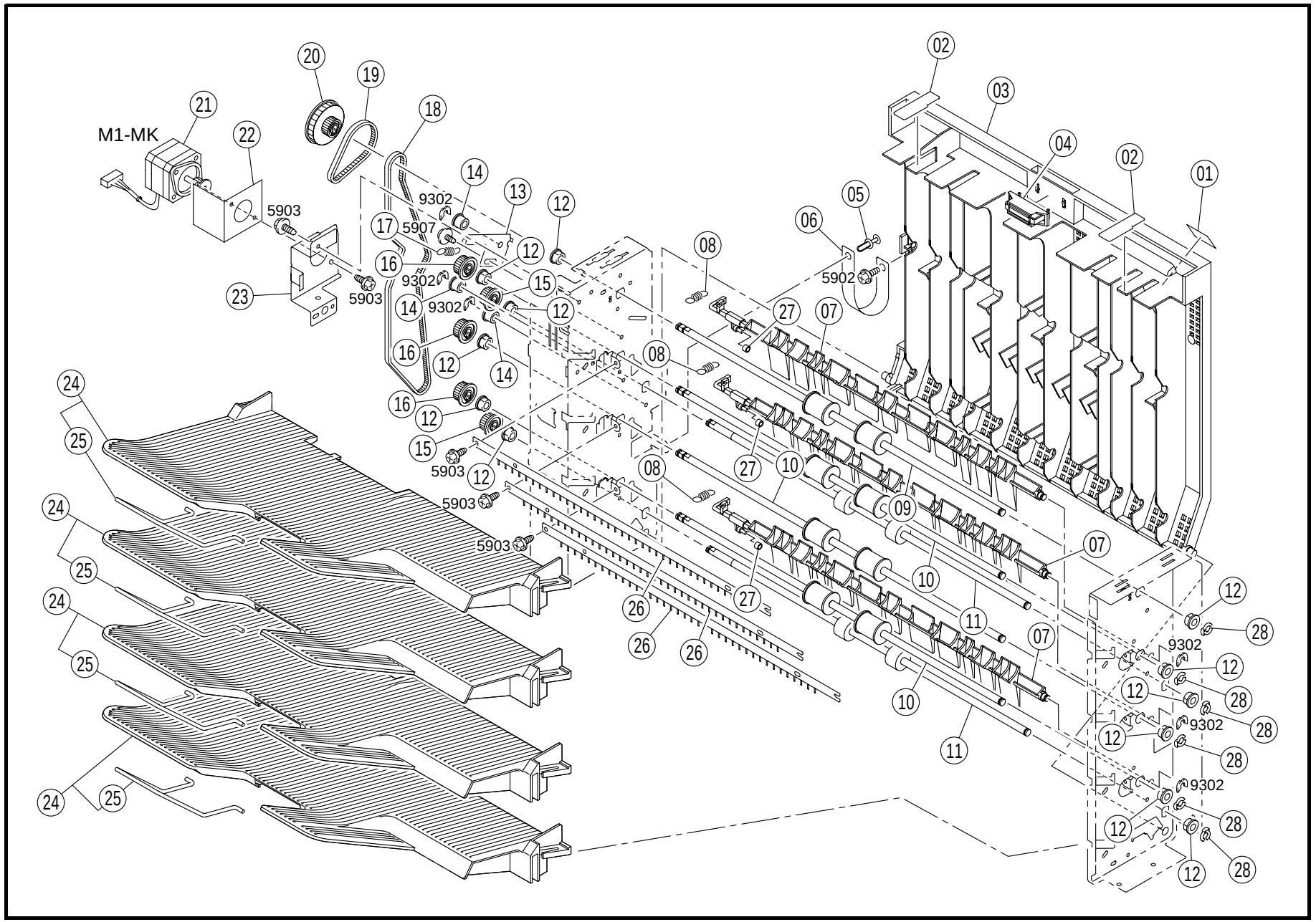

INDEX	PART NO.	PART NAME	REC	QTY
01	4510-5045-01	LABEL FN-8		1
02	4510-5035-01	GUIDE		2
03	4510-5034-01	RIGHT COVER		1
04	4510-5019-01	MAGNET		1
05	4566-5005-01	STOPPER		1
06	4566-5037-01	BAND		1
07	4510-5057-01	GUIDE		3
08	4510-5010-01	TENSION SPRING		3
09	4510-5032-01	ROLLER		1
10	4510-5017-01	ROLLER		3
11	4510-5016-01	ROLLER		2
12	4566-5001-01	BUSHING		12
13	4510-5058-01	BRACKET		1
14	4566-5006-01	PULLEY		3
15	4510-5015-01	GEAR		2
16	4510-5047-01	PULLEY		3
17	4510-5011-01	TENSION SPRING		1
18	4510-5007-01	TIMING BELT		1
19	4510-5006-01	TIMING BELT		1
20	4566-5010-01	PULLEY 57/28T		1
21	4510-5022-01	MOTOR TRANS (M1-MK)		1
22	4510-5049-01 NS	BRACKET		1
23	4510-5064-01 NS	BRACKET		1
24	4510-5042-01	TRAY		4
25	4510-5072-01 NS	GUIDE		4
26	4510-5023-01	NEUTRALIZING BRUSH		3
27	4566-5007-01	CUSHION		3
28	4510-5046-01	STOP RING		6

INDEX	PART NO.	PART NAME	REC	QTY	SFIX

⑴ 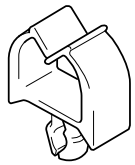							
⑵ 							
⑶ 							
⑷ 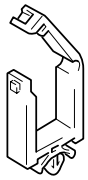							
⑸ 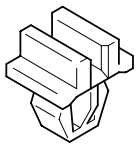							

INDEX	PART NO.	PART NAME	REC	QTY	INDEX	PART NO.	PART NAME	REC	QTY
01	4510-5001-01	CORD CLAMP		1					
02	4510-5002-01	CORD CLAMP		5					
03	4510-5004-01	CORD CLAMP		1					
04	4510-5020-01	CORD CLAMP		1					
05	4566-5002-01	WIRING SADDLE		2					

INDEX	PART NO.	PART NAME	REC	QTY	SFIX

5 SCREWS AND WASHERS MK-1

INDEX	PART NO.	PART NAME	ILLUST
2505	9642-0303-13	SCREW	
5902	4566-5102-01	SCREW	
5903	4566-5103-01	SCREW	
5905 5906	4510-5101-01 4510-5102-01	SCREW	
5907	4510-5103-01	SCREW	
9302	4425-3001-01	RETAINING RING	

INDEX	PART NO.	PART NAME	ILLUST

INDEX	PART NO.	PART NAME	ILLUST

6 NUMERICAL INDEX MK-1

PART NO.	FIG.	INDEX	QTY		PART NO.	FIG.	INDEX	QTY		PART NO.	FIG.	INDEX	QTY		PART NO.	FIG.	INDEX	QTY	
4510-5001-01	04	01	1		4510-5069-01	01	34	1											
4510-5002-01	04	02	5		4510-5070-01	01	33	1											
4510-5003-01	01	19	1		4510-5071-01	01	27	1											
4510-5004-01	04	03	1		4510-5072-01	03	25	4											
4510-5005-01	01	30	1		4566-5001-01	03	12	12											
4510-5006-01	03	19	1		4566-5002-01	04	05	2											
4510-5007-01	03	18	1		4566-5005-01	03	05	1											
4510-5008-01	01	10	1		4566-5006-01	03	14	3											
4510-5009-01	02	12	2		4566-5007-01	03	27	3											
4510-5010-01	03	08	3		4566-5010-01	03	20	1											
4510-5011-01	03	17	1		4566-5012-01	01	05	2											
4510-5012-01	02	08	12		4566-5012-01	02	03	5											
4510-5013-01	02	07	8		4566-5037-01	03	06	1											
4510-5014-01	02	14	4																
4510-5015-01	03	15	2																
4510-5016-01	03	11	2																
4510-5017-01	03	10	3																
4510-5018-01	02	15	2																
4510-5019-01	03	04	1																
4510-5020-01	04	04	1																
4510-5021-01	02	04	4																
4510-5022-01	03	21	1																
4510-5023-01	01	09	1																
4510-5023-01	03	26	3																
4510-5024-01	01	08	2																
4510-5025-01	01	01	1																
4510-5026-01	01	32	1																
4510-5027-01	01	16	1																
4510-5028-01	01	21	1																
4510-5029-01	01	17	1																
4510-5030-01	01	28	1																
4510-5031-01	01	20	1																
4510-5032-01	03	09	1																
4510-5033-01	02	01	4																
4510-5034-01	03	03	1																
4510-5035-01	03	02	2																
4510-5036-01	01	25	1																
4510-5037-01	01	24	1																
4510-5038-01	01	23	1																
4510-5039-01	01	29	1																
4510-5040-01	01	07	1																
4510-5041-01	01	18	1																
4510-5042-01	03	24	4																
4510-5043-01	01	26	1																
4510-5044-01	01	22	2																
4510-5045-01	03	01	1																
4510-5046-01	03	28	6																
4510-5047-01	03	16	3																
4510-5048-01	02	06	4																
4510-5049-01	03	22	1																
4510-5050-01	01	03	1																
4510-5051-01	01	04	1																
4510-5052-01	01	11	1																
4510-5053-01	02	02	4																
4510-5054-01	01	02	1																
4510-5054-01	02	05	3																
4510-5055-01	02	13	2																
4510-5056-01	02	10	6																
4510-5057-01	03	07	3																
4510-5058-01	03	13	1																
4510-5059-01	01	14	1																
4510-5060-01	01	15	3																
4510-5061-01	01	31	1																
4510-5062-01	01	13	1																
4510-5063-01	01	12	1																
4510-5064-01	03	23	1																
4510-5065-01	01	06	1																
4510-5066-01	02	16	1																
4510-5067-01	02	11	1																
4510-5068-01	02	09	2																



Copyright

2003 MINOLTA Co., Ltd.

Printed in Japan

Use of this catalog should be strictly supervised to avoid disclosure of confidential information.

MINOLTA Co., Ltd.

4510-7995-21 03071500