MINOLTA

Parts Catalog

The essentials of imaging

PF-122

4348-711

PREFACE

1. The part numbers listed in Parts Catalog are those which were assigned to the parts making up the machine at the time machine was originally introduced onto the market.

2. Parts whose INDEX numbers are shown white against a black background in the illustration are those to be used in only certain market areas. These part numbers are given in the lower half part of the list section. Check the SFIX No. listed in SFIX CHART on page II to find which part number is applicable to your own area.

3. Parts whose INDEX numbers are shown black against a white background in the illustration are those to be used in all market areas. These parts are listed on the upper half part of the list section.

4. If "NS" follows a part number given in the list section, it indicates that we do not keep a stock of the part. The part is not required for ordinary service jobs, either.

5. If "RP" is shown in the REC column of the list section, it indicates that the part is functionally important.

6. In the exploded views in this Parts Catalog the parts (Screws & Washes, etc...) which are indicated with a "four-digit" numbers are listed in numerical order in the section "SCREWS AND WASHERS". Please check these "four-digit" numbers with the part numbers ("ten-digit" numbers) which should be used for ordering the part.

7. All part numbers consist of "ten-digit" which should all be quoted when ordering a part. The price of parts can be obtained by referring to the "Parts Price List" which is separately issued.

8. All infomation contained in this Parts Catalog is subject to change.

SFIX CHART

SFIX No.	COUNTRY	VOLTAGE	FREQUENCY (Hz)	PAPER SIZE	SFIX No.	COUNTRY	VOLTAGE	FREQUENCY (Hz)	PAPER SIZE
711	JAPAN	-	-	METRIC	713	EXCEPT JAPAN	-	-	INCH
712	EXCEPT JAPAN	-	-	METRIC					

CONTENTS

1. CABINET HOUSING (A) ••••••

1 CABINET HOUSING (A) PF-122

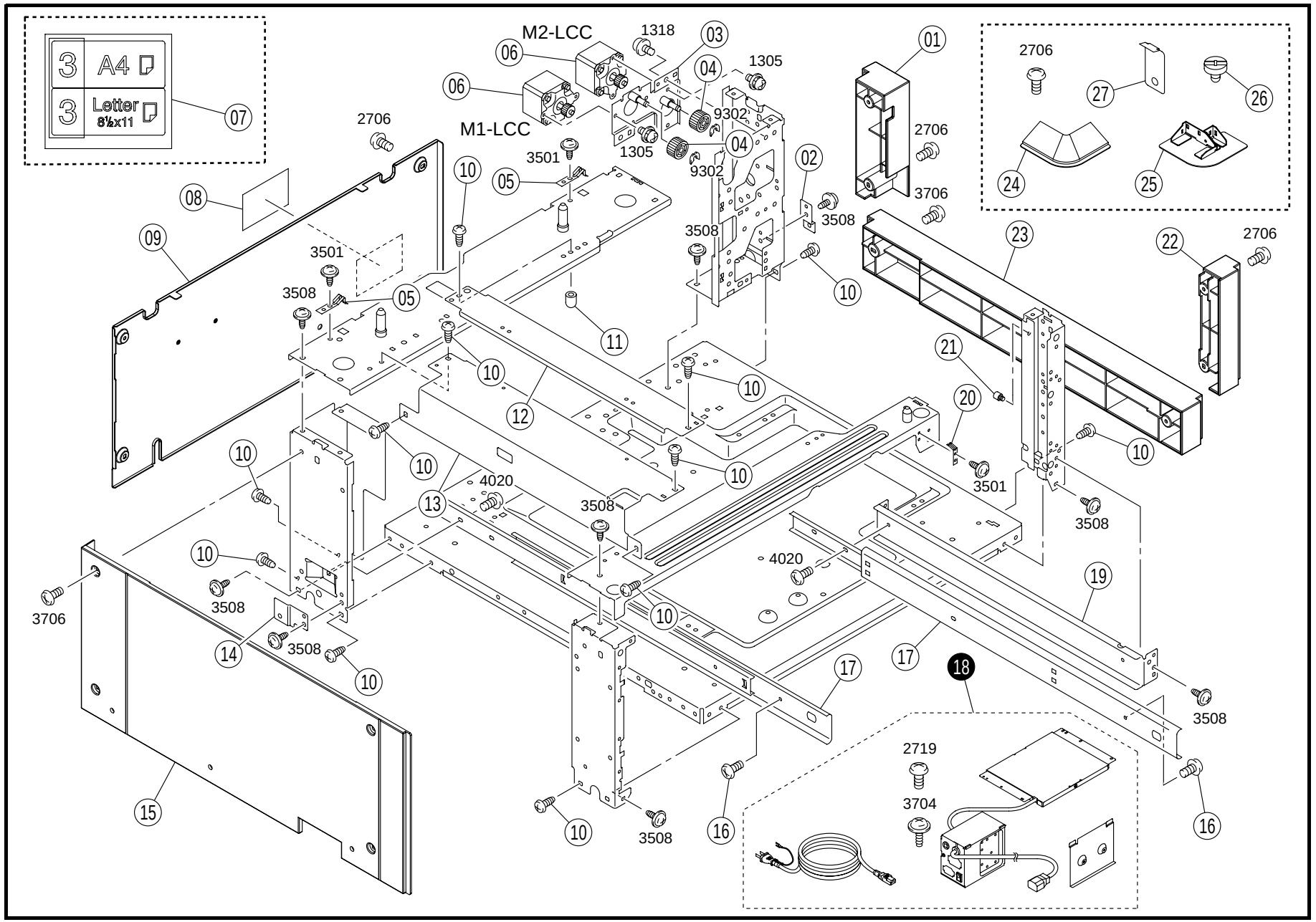

INDEX	PART NO.		PART NAME	REC	QTY
01	4348-1003-02		COVER		1
02	4348-2027-01	NS	BRACKET		1
03	4348-0202-01	NS	FRAME ASSY		1
04	4348-3030-01		GEAR		2
05	4348-2022-01		PLATE SPRING		2
06	9314-1201-01		MOTOR (M1.2-LCC)		2
07	4348-7305-01		LABEL		1
08	4479-7305-01		LABEL CAUTION		1
09	4348-1001-02		COVER		1
10	4002-2581-01		SCREW		12
11	1038-5302-01		CAP		1
12	4348-2016-01	NS	REINFORCE PLATE		1
13	4348-2014-02	NS	REINFORCE PLATE		1
14	4348-2029-01	NS	BRACKET		1
15	4348-1005-02		COVER		1
16	1151-3300-01		TAPPING SCREW		4
17	4348-2032-01		RAIL		2
19	4348-2031-01	NS	BRACKET		1

INDEX	PART NO.	PART NAME	REC	QTY	SFIX
18	4348-0901-01	DEHUMIDIFLYING HEATER		1	711

INDEX	PART NO.	PART NAME	REC	QTY
20	4348-2021-01	PLATE SPRING		1
21	4348-3059-01	SHOULDER SCREW		1
22	4348-1002-01	COVER		1
23	4348-1004-03	COVER		1
24	4348-2043-01	COVER		4
25	4348-2025-02	STOP PLATE		4
26	4658-3042-01	SHOULDER SCREW		4
27	4658-3140-02	STOP PLATE		4

2 CABINET HOUSING (B) PF-122

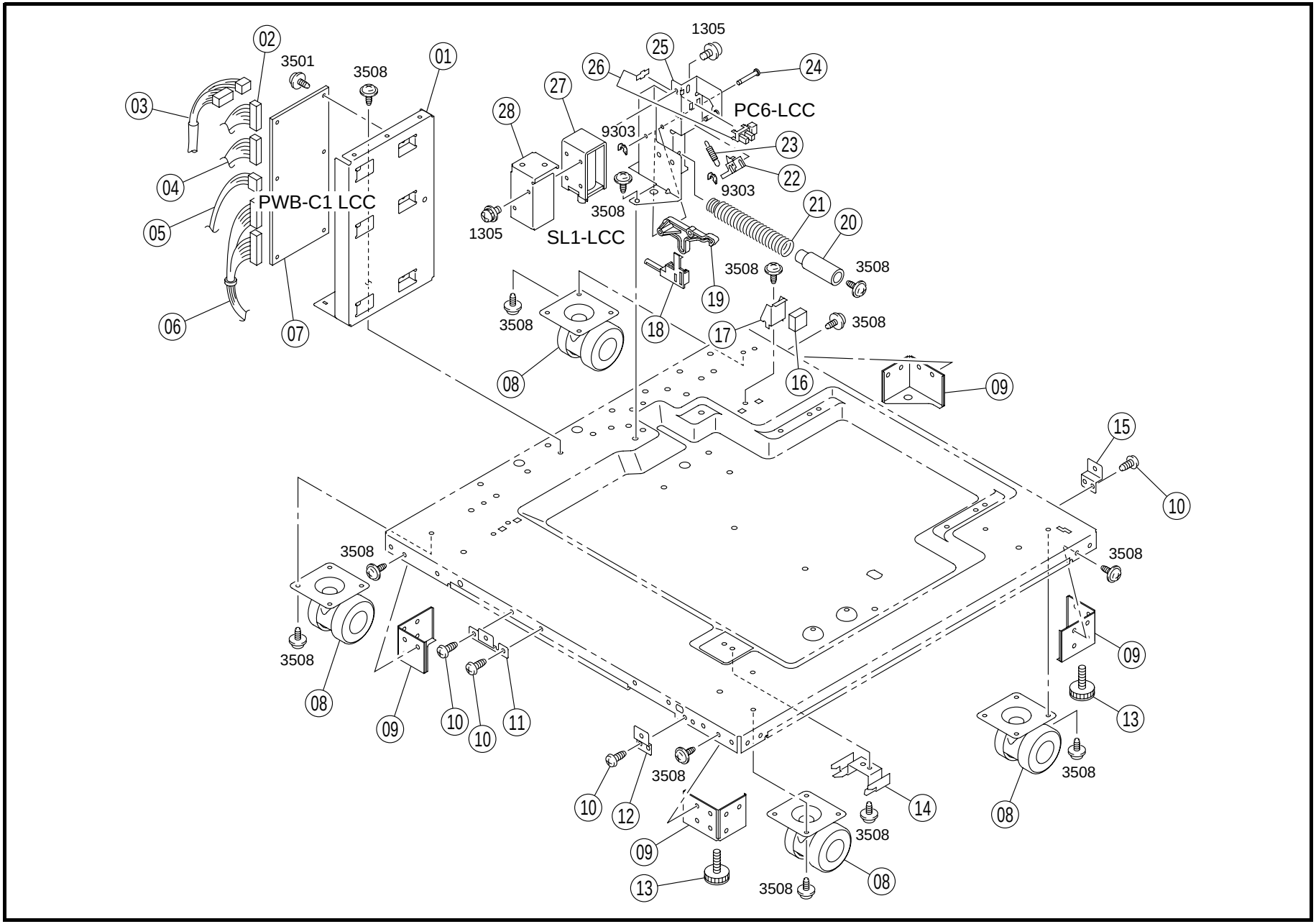

INDEX	PART NO.		PART NAME		REC	QTY
01	4348-2035-01	NS	BRACKET			1
02	4348-6802-03		WIRE HARNESS ASSY			1
03	4348-6801-02		WIRE HARNESS ASSY			1
04	4348-6803-02		WIRE HARNESS ASSY			1
05	4348-6804-01		WIRE HARNESS ASSY			1
06	4348-6805-02		WIRE HARNESS ASSY			1
07	4348-0101-03		PWB ASSY	(PWB-C1 LCC)	RP	1
08	4348-2010-01		CASTOR			4
09	4348-2023-01		STOP PLATE			4
10	4002-2581-01		SCREW			4
11	4348-2030-01	NS	BRACKET			1
12	4348-2028-01	NS	BRACKET			1
13	4348-2024-01		ADJUSTING PLATE			2
14	4348-2017-01	NS	BRACKET			1
15	4348-2026-01	NS	BRACKET			1
16	4425-3750-01		RUBBER STRIP			1
17	4425-3751-13		BRACKET			1
18	4640-3710-01		LEVER			1
19	4425-3758-02		PAWL			1
20	4425-3745-01		HOLDER			1
21	4425-3766-13		PRESSURE SPRING			1
22	1075-3760-02		LEVER			1
23	1075-3762-01		TENSION SPRING			1
24	1200-5242-16		SHAFT			1
25	4425-0240-01		BRACKET			1
26	4640-0903-01		PHOTO INTERRUPTER	SET (PC6-LCC)		1
27	9321-2620-41		SOLENOID	TRAY LO (SL1-LCC)		1
28	4425-3763-01		COVER			1

INDEX	PART NO.	PART NAME	REC	QTY	SFIX

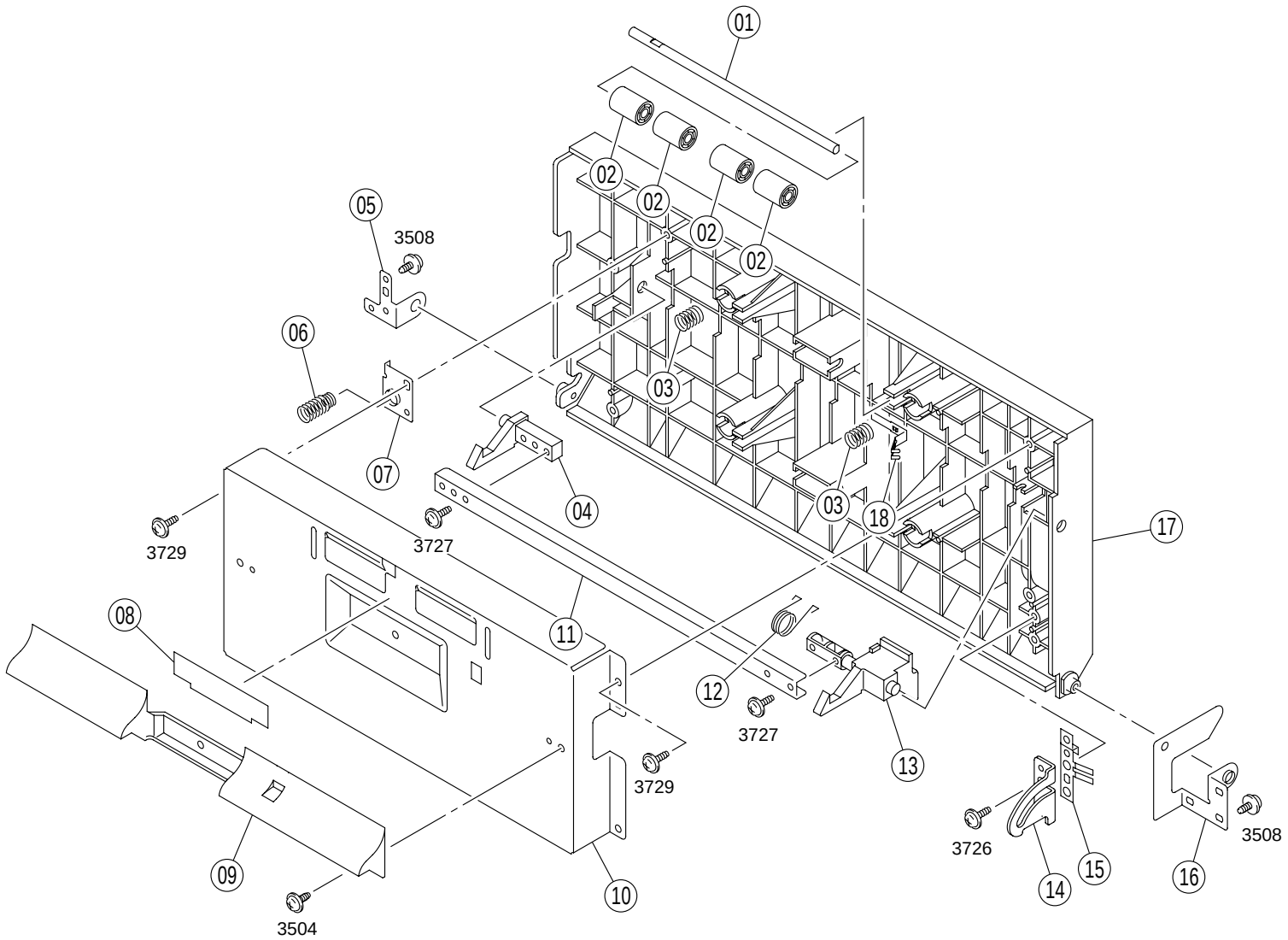
01
02
02
02
02
02
05
3508
06
07
03
03
04
3729
3727
18
17
08
11
12
3727
13
3729
09
10
3504
3726
14
15
16
3508

INDEX	PART NO.		PART NAME	REC	QTY	INDEX	PART NO.	PART NAME	REC	QTY
01	4348-3071-01	NS	SHAFT		1					
02	4030-3122-01		ROLL		4					
03	4030-3123-01		PRESSURE SPRING		2					
04	4348-3053-01		PAWL		1					
05	4348-3064-01	NS	BRACKET		1					
06	1149-3454-01		PRESSURE SPRING		1					
07	4348-3072-01	NS	BRACKET		1					
08	4348-3017-01		GUIDE		1					
09	4348-3016-02		GUIDE		1					
10	4348-3066-01		GUIDE PLATE		1					
11	4348-3054-01		BRACKET		1					
12	4348-3058-01		TORSION SPRING		1					
13	4348-3052-01		PAWL		1					
14	4348-3063-02		STOPPER		1					
15	4348-3060-01		EARTH GROUND		1					
16	4348-0201-02	NS	BRACKET ASSY		1					
17	4348-3050-02		DOOR		1					
18	4348-3061-01		EARTH GROUND		1					

INDEX	PART NO.	PART NAME	REC	QTY	SFIX

4 PAPER TAKE-UP SECTION (A) PF-122

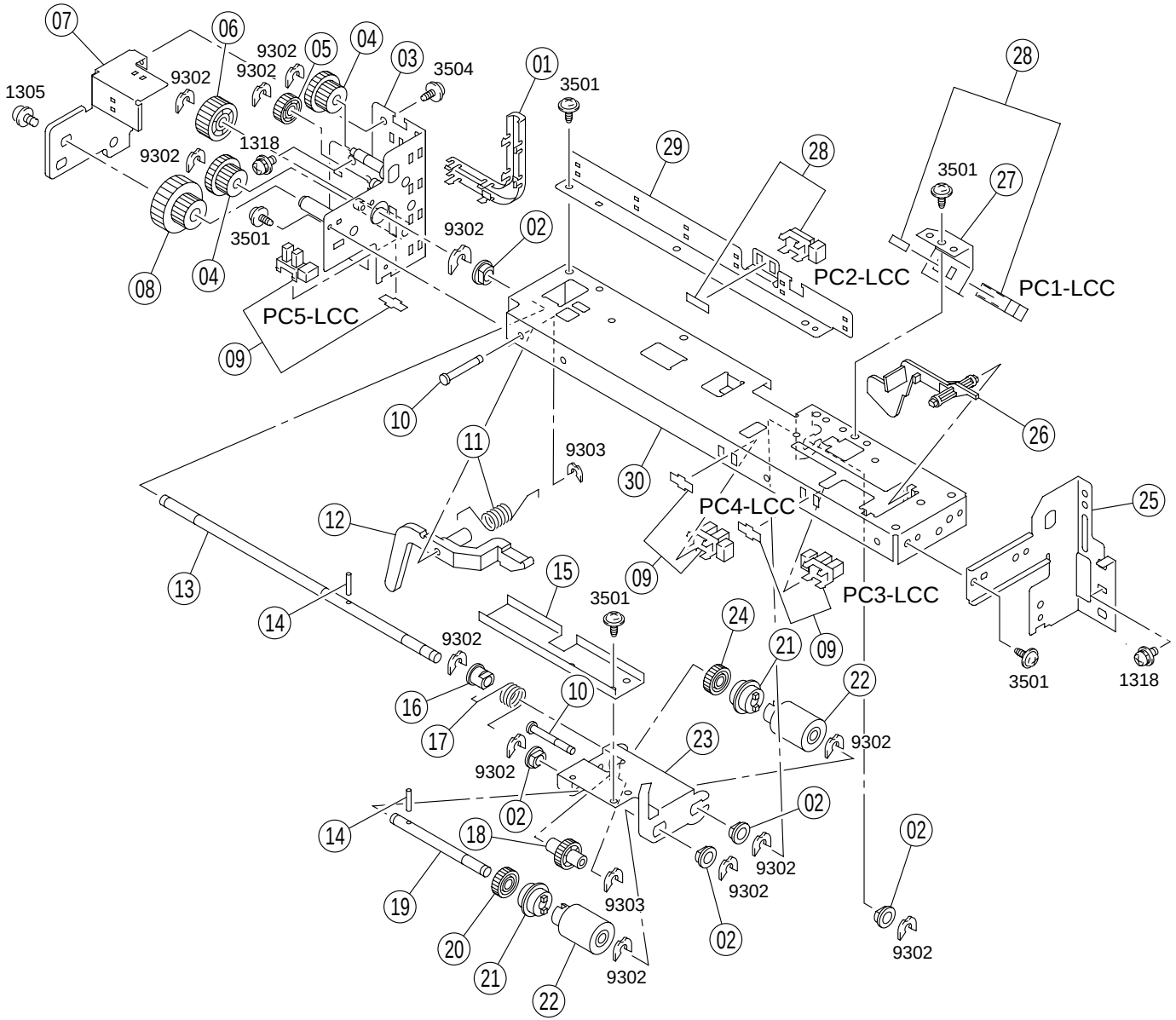

INDEX	PART NO.		PART NAME		REC	QTY
01	4348-3070-02		COVER			1
02	4131-3003-01		BUSHING			5
03	4348-0204-02	NS	FRAME ASSY			1
04	4348-3031-01		GEAR			2
05	4348-3032-01		GEAR			1
06	4348-3029-01		GEAR			1
07	4348-3069-01	NS	BRACKET			1
08	4348-3048-01		GEAR			1
09	4131-0902-01		PHOTO INTERRUPTER	(PC3.4.5-LCC)		3
10	4030-3020-01	NS	SHAFT			2
11	4030-3012-01		TORSION SPRING			1
12	4348-3007-01		LEVER			1
13	4348-3047-01	NS	SHAFT			1
14	1067-2501-01		PIN			2
15	4348-3026-01	NS	BRACKET			1
16	1065-3086-01		BUSHING			1
17	4030-3030-01		TORSION SPRING			1
18	4030-3008-01		GEAR			1
19	4030-3003-01		SHAFT			1
20	4425-3016-01		GEAR			1
21	4030-3034-01		CLUTCH			2
22	4030-3005-01		ROLLER	TAKE-UP	RP	2
23	4348-3002-01		HOLDER			1
24	4425-3013-01		GEAR			1
25	4348-3005-03	NS	FRAME			1
26	4348-3025-01		ACTUATOR			1
27	4348-3014-02	NS	BRACKET			1
28	4349-0902-01		SOLID STATE SWITCH	TAKE-U (PC1.2-LCC)		2
29	4348-3067-02	NS	BRACKET			1
30	4348-3001-01	NS	FRAME			1

INDEX	PART NO.	PART NAME	REC	QTY	SFIX

5 PAPER TAKE-UP SECTION (B) PF-122

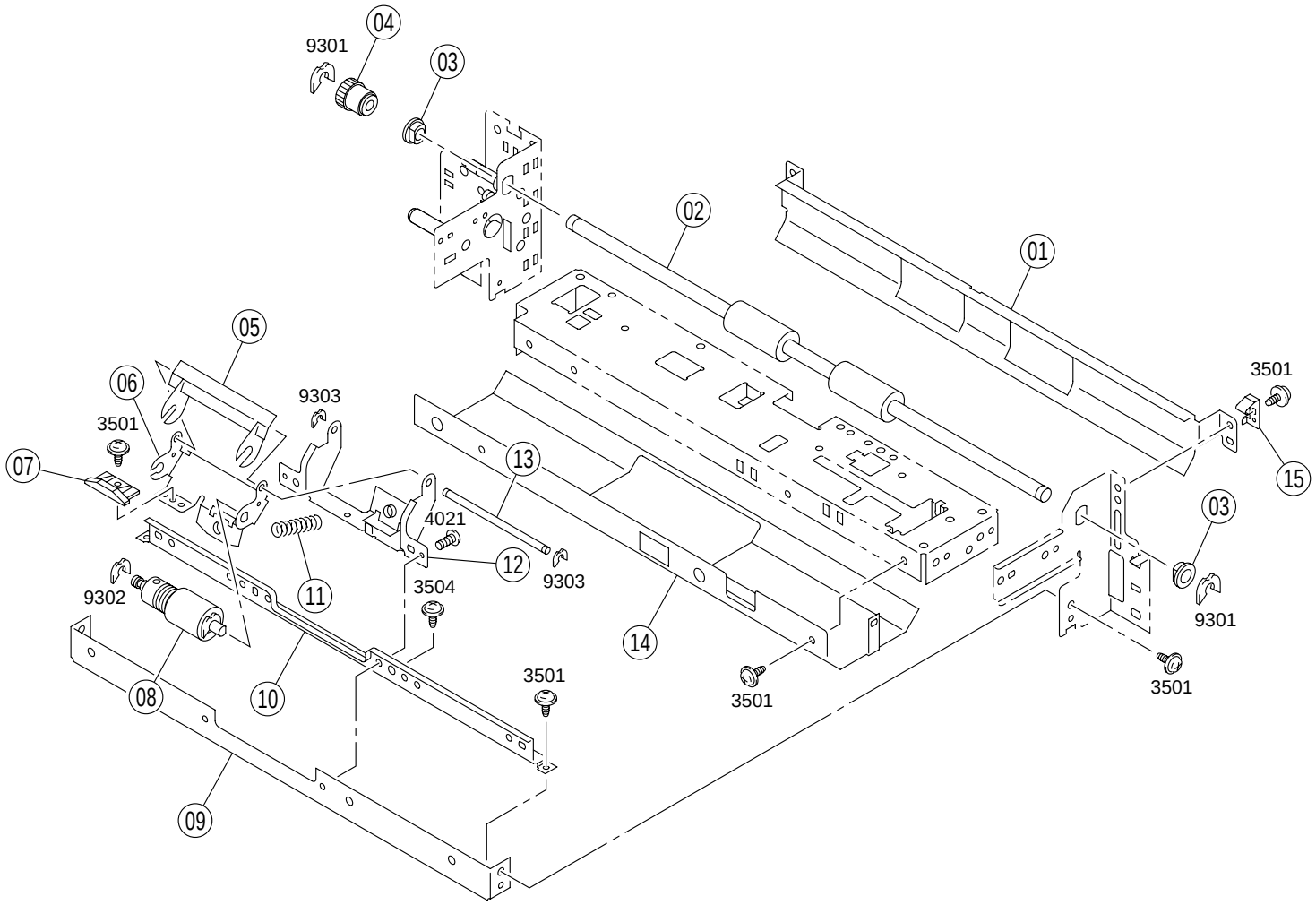

INDEX	PART NO.		PART NAME		REC	QTY	INDEX	PART NO.	PART NAME	REC	QTY
01	4348-3010-01		GUIDE PLATE			1					
02	4348-3011-03		ROLLER	TRANSPORT	RP	1					
03	4131-3532-02		BUSHING			2					
04	4348-3028-01		GEAR			1					
05	4030-3077-01		GUIDE			1					
06	4030-3013-01	NS	HOLDER			1					
07	4030-3078-01		LEVER			1					
08	4030-0151-01		ROLLER ASSY	SEPARATOR	RP	1					
09	4030-3025-02	NS	BRACKET			1					
10	4030-3037-01	NS	REINFORCE PLATE			1					
11	4030-3017-02		PRESSURE SPRING			1					
12	4030-3014-01	NS	BRACKET			1					
13	4030-3039-01		SHAFT			1					
14	4348-3062-01		GUIDE			1					
15	4348-3073-01		PLATE SPRING			1					

INDEX	PART NO.	PART NAME	REC	QTY	SFIX

6 PAER TRAY UNIT (A) PF-122

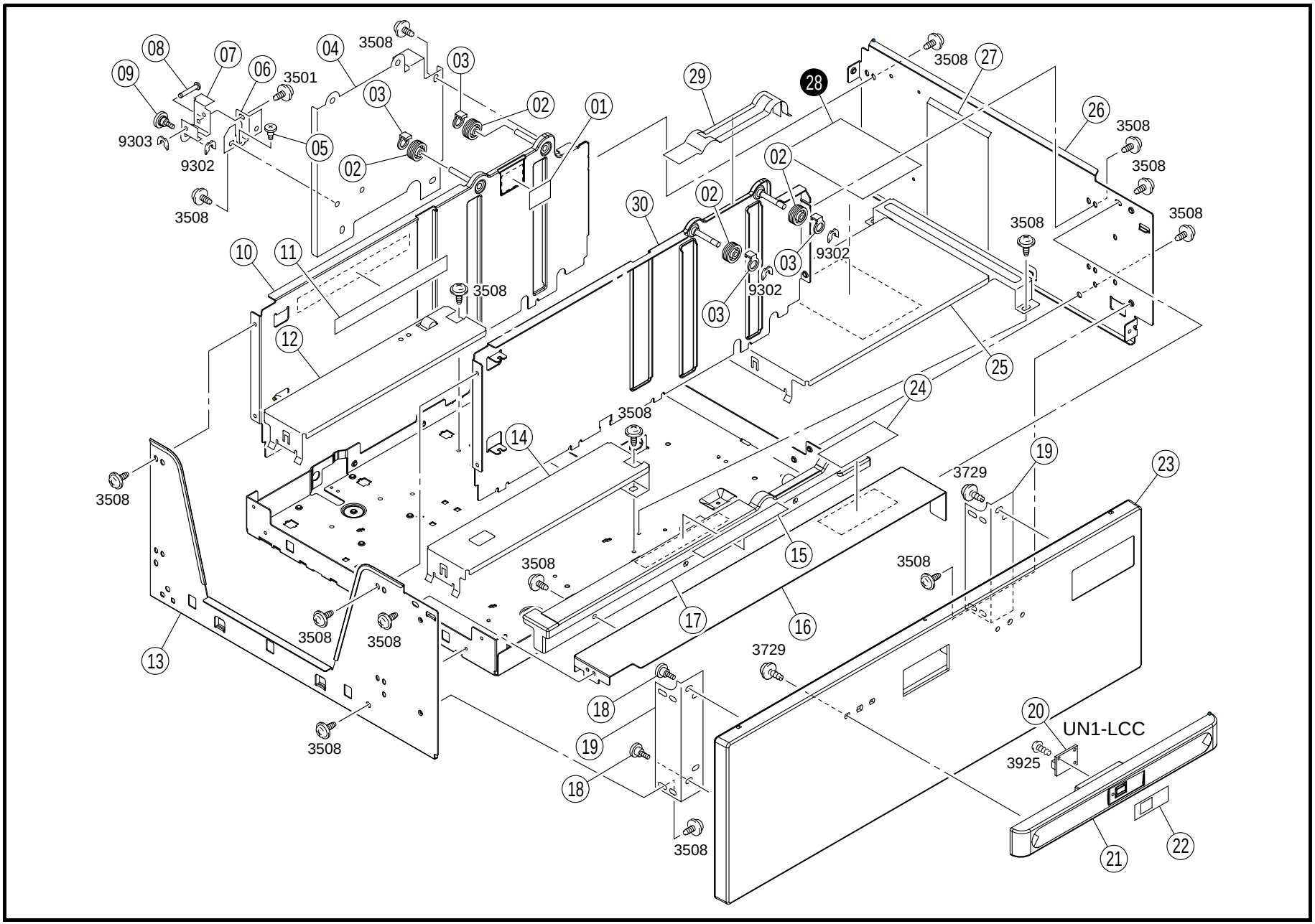

INDEX	PART NO.		PART NAME	REC	QTY
01	4348-7306-01		LABEL		1
02	4425-3715-01		PULLEY		4
03	4425-3770-01		COVER		4
04	4348-3108-02	NS	REINFORCE PLATE		1
05	1100-1340-10		SHOULDER SCREW		1
06	4425-3762-04		BRACKET		1
07	4640-3711-12	NS	BRACKET		1
08	1200-5241-11		SHAFT		1
09	4425-3761-01		SHOULDER SCREW		1
10	4348-0206-01		REGULATING PLATE ASSY		1
11	4348-7307-01		LABEL		1
12	4640-3702-01		GUIDE PLATE		1
13	4348-3104-01		REGULATING PLATE		1
14	4640-3703-01		GUIDE PLATE		1
15	4348-7309-01		LABEL		1
16	4348-3102-02		COVER		1
17	4348-3123-02		COVER		1
18	4425-3756-01		SHOULDER SCREW		2
19	4425-3792-01		SUPPORT PLATE		2
20	4640-6002-01		PWB ASSY DESCEN (UN1-LCC)		1
21	4348-3122-01		HANDLE		1
22	4348-7310-02		LABEL		1
23	4348-3121-03		COVER		1
24	4348-7308-01		LABEL		1
25	4444-3778-13		GUIDE PLATE		1
26	4348-3103-01		REGULATING PLATE		1
27	4348-3117-01		SEAL		1
29	4348-3119-02		SEAL		1
30	4348-0205-01		REGULATING PLATE ASSY		1

INDEX	PART NO.	PART NAME	REC	QTY	SFIX
28	4425-7343-01	LABEL LETTER ONLY		1	713
28	4425-7344-01	LABEL A4 ONLY		1	711, 712

7 PAER TRAY UNIT (B) PF-122

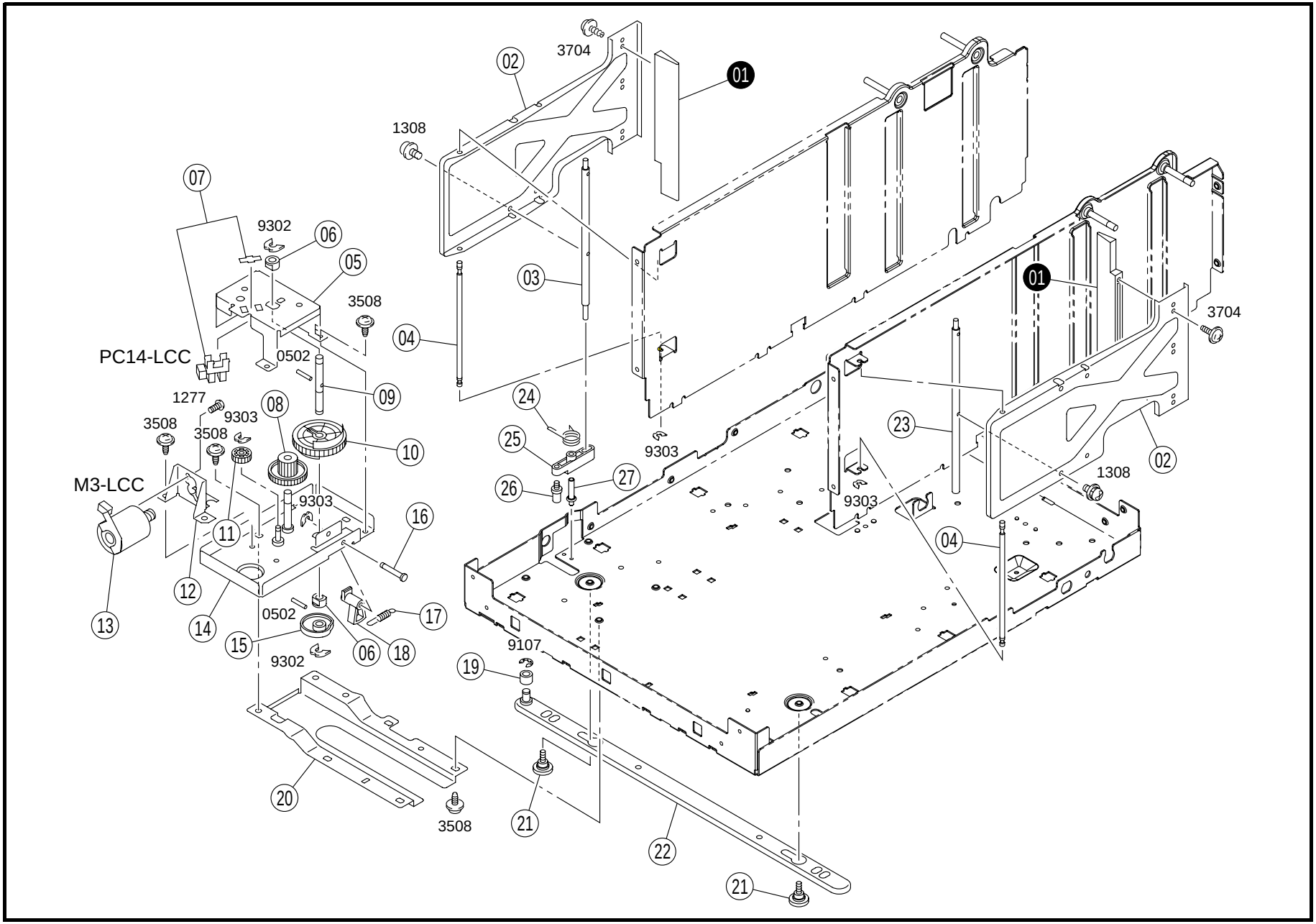

INDEX	PART NO.		PART NAME	REC	QTY
02	4348-3107-01		REGULATING PLATE		2
03	4479-3705-01		SHAFT		1
04	4479-3704-02		SHAFT		2
05	4348-3111-01	NS	REINFORCE PLATE		1
06	1200-3120-03		BUSHING		2
07	4640-0903-01		PHOTO INTERRUPTER HOME (PC14-LCC)		1
08	4425-3726-01		GEAR 14/63T		1
09	4479-3715-01		SHAFT		1
10	4479-3713-01		GEAR 40T		1
11	4425-3723-01		GEAR 16/20T		1
12	4425-3731-02		BRACKET		1
13	4348-0751-01		MOTOR ASSY SHIFT GAT (M3-LCC)		1
14	4348-0207-01	NS	BASE FRAME ASSY		1
15	4479-3714-01		CAM		1
16	4348-3109-01	NS	SHAFT		1
17	4479-3717-01		TENSION SPRING		1
18	4479-3718-01		STOPPER		1
19	1200-2346-09		COLLAR		1
20	4348-3114-01	NS	REINFORCE PLATE		1
21	1100-1340-10		SHOULDER SCREW		2
22	4348-0208-01		COUPLING ASSY		1
23	4479-3706-01		SHAFT		1
24	4348-3113-01		TORSION SPRING		1
25	4479-3708-01		LEVER		1
26	4479-3709-01		SHOULDER SCREW		1
27	1100-1944-02		SHOULDER SCREW		1

INDEX	PART NO.	PART NAME	REC	QTY	SFIX
01	4479-3702-02	SPACER		2	711, 712
01	4479-3703-02	SPACER		2	713

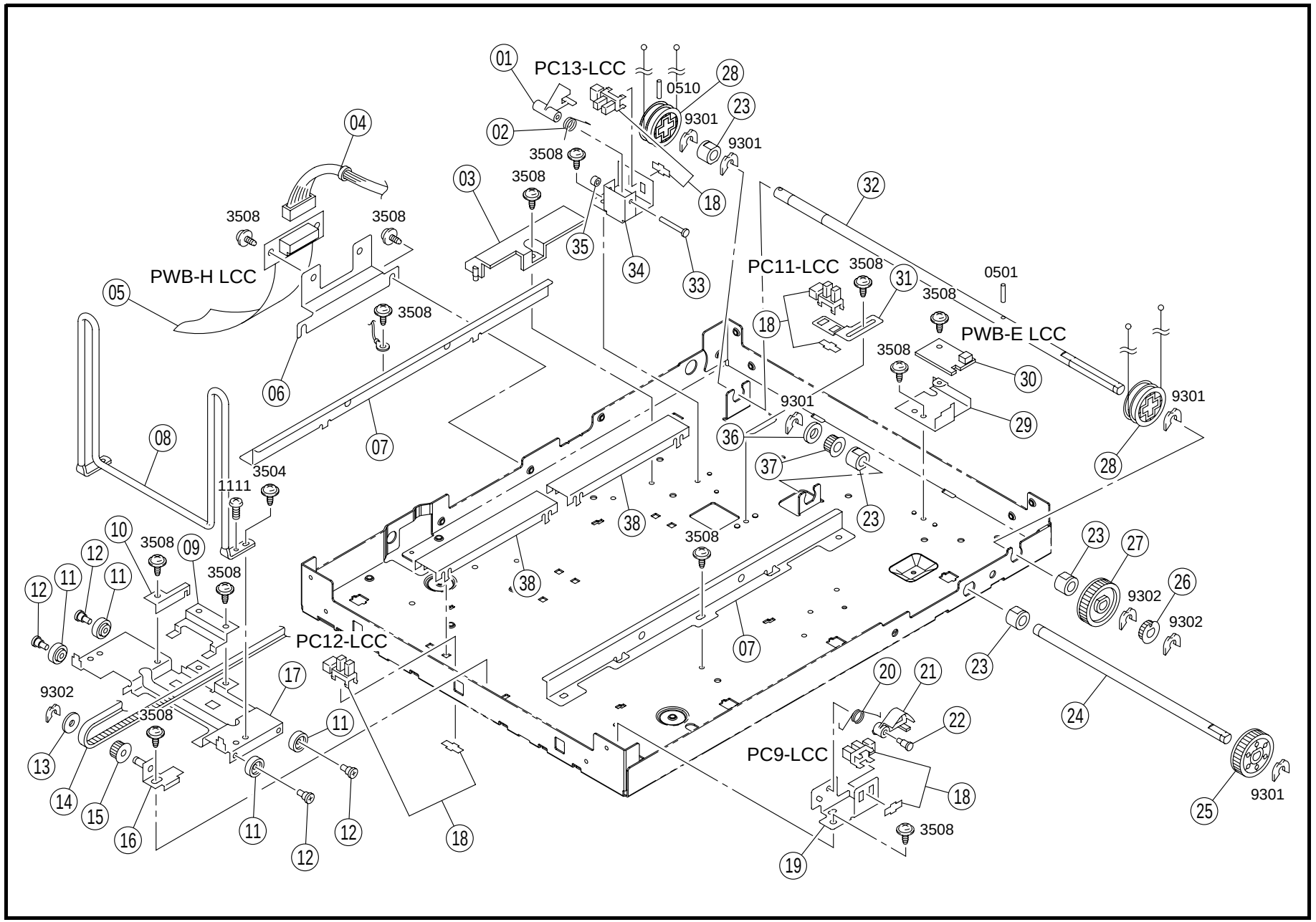
01
PC13-LCC
0510
28
9301
23
9301
02
3508
04
3508
3508
03
3508
18
32
3508
3508
35
34
33
PC11-LCC
3508
31
0501
PWB-H LCC
05
3508
18
3508
PWB-E LCC
3508
30
06
9301
9301
29
07
36
28
08
37
3504
1111
23
38
3508
23
27
10
3508
09
3508
38
12
11
11
12
9302
26
9302
PC12-LCC
07
23
17
20
21
9302
3508
11
22
24
13
PC9-LCC
14
15
16
11
12
12
18
18
25
9301
3508
19

INDEX	PART NO.	PART NAME	REC	QTY
01	4444-3741-01	ACTUATOR		1
02	4444-3743-01	TORSION SPRING		1
03	4444-3744-01	COVER		1
04	4348-6806-02	WIRE HARNESS ASSY		1
05	4479-0105-01	PW BOARD-H (PWB-H LCC)		1
06	4425-3774-01	BRACKET		1
07	4425-3733-01	RAIL		2
08	4425-3732-03	ARM		1
09	4425-3741-01	STOP PLATE		1
10	4425-3735-01	DETECTING PLATE		1
11	4425-3740-01	ROLL		4
12	1273-3003-01	SHOULDER SCREW		4
13	1200-1541-01	WASHER		1
14	4425-3747-01	TIMING BELT		1
15	4425-3742-02	PULLEY 20T		1
16	4425-0231-01	AXLE PLATE		1
17	4425-3734-02	SLIDER		1
18	4640-0903-01	PHOTO INTERRUPTER (PC9.11.12.13-LCC)		4
19	4425-3776-01	BRACKET		1
20	1074-3753-01	TORSION SPRING		1
21	4425-3772-01	LEVER		1
22	1100-1332-05	SHOULDER SCREW		1
23	1200-3134-16	BUSHING		4
24	4425-3744-02	SHAFT		1
25	4425-3755-03	GEAR 30T		1
26	4479-3745-01	GEAR 14T		1
27	4479-3748-02	GEAR 34T		1
28	4425-3714-01	WIRE		2
29	4425-3775-03	BRACKET		1
30	4425-0104-02	PW BOARD-E EMPTY (PWB-E LCC)		1
31	4348-3116-01 NS	BRACKET		1
32	4479-3744-01	SHAFT		1
33	4425-3039-01	SHAFT		1
34	4444-3742-01	BRACKET		1
35	1200-2105-06	RETAINING RING		1
36	1200-1566-07	COLLAR		1
37	4425-3743-02	PULLEY 22T		1
38	4425-3710-01	GUIDE		2

INDEX	PART NO.	PART NAME	REC	QTY	SFIX

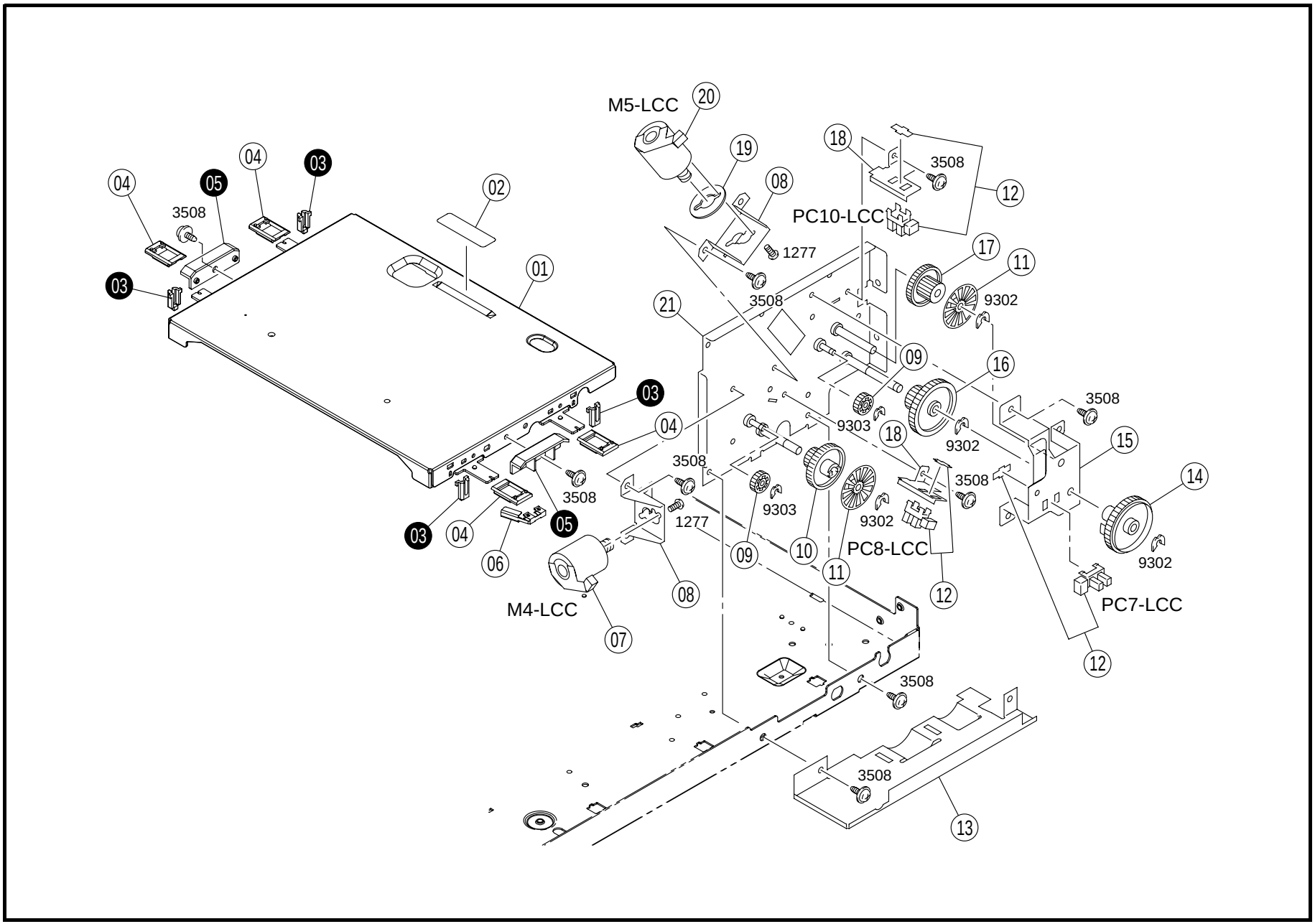
M5-LCC
PC10-LCC
PC8-LCC
PC7-LCC
M4-LCC
3508
1277
9302
9303

INDEX	PART NO.	PART NAME	REC	QTY
01	4640-3704-03	LIFTING PLATE		1
02	1052-5409-01	FRICTION SHEET		1
04	1075-3708-13	HOLDER		4
06	1075-3769-01	GROUND PLATE		1
07	4348-0751-01	MOTOR ASSY SHIFT (M4-LCC)		1
08	4425-3731-02	BRACKET		2
09	4425-3723-01	GEAR 16/20T		2
10	4425-3754-01	GEAR 18/63T		1
11	4425-3729-02	SYNCHRONIZING DISK		2
12	4640-0903-01	PHOTO INTERRUPTER (PC7.8.10-LCC)		3
13	4425-3709-02	COVER		1
14	4479-3746-01	GEAR 43T		1
15	4479-3743-02	REINFORCE PLATE		1
16	4479-3741-02	GEAR 23/45T		1
17	4425-3726-01	GEAR 14/63T		1
18	4425-3730-01	BRACKET		2
19	4425-3799-01	CUSHION		1
20	4425-0753-01	MOTOR ELEVATOR (M5-LCC)		1
21	4479-0203-01	MOUNTING PLATE		1

INDEX	PART NO.	PART NAME	REC	QTY	SFIX
03	1075-3709-01	SPACER		4	713
05	1075-3755-01	SPACER		2	711, 712

10 WIRING AACESSORIES AND JIGS PF-122

⑴ 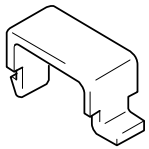	⑺ 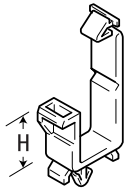						
⑵ 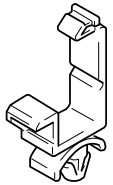	⑻, ⑼ 						
⑶ 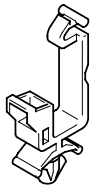	⑽ 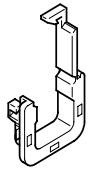						
⑷ 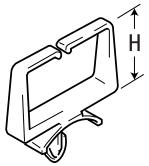							
⑸, ⑹ 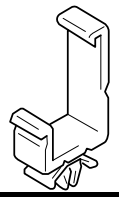							

INDEX	PART NO.	PART NAME	REC	QTY	INDEX	PART NO.	PART NAME	REC	QTY
01	1065-5872-01	CORD CLAMP		11					
02	9384-1000-51	WIRING SADDLE		9					
03	9384-1100-91	WIRING SADDLE		4					
04	9384-1310-81	WIRING SADDLE 6.4H		2					
05	9384-1310-91	WIRING SADDLE 18.5H		5					
06	9384-1311-21	WIRING SADDLE 16.8H		5					
07	9384-1921-11	WIRING SADDLE 9.2H		12					
08	9384-2010-21	EDGE COVER 8.5H		9					
09	9384-2800-36	EDGE COVER 15.0H		3					
10	9384-2910-31	EDGE COVER		2					

INDEX	PART NO.	PART NAME	REC	QTY	SFIX

11 SCREWS AND WASHERS PF-122

INDEX	PART NO.	PART NAME	ILLUST
0221 0224	9754-3025-08 9754-3018-08	SPRING ROLL PIN	
0502 0510	9752-3012-50 9752-3014-50	PIN	
1111	9642-0306-13	SCREW	
1277	9644-2606-13	SCREW	
1305 1308 1318 1353	9646-0306-13 9646-0308-13 9646-0408-13 9646-0330-13	SCREW	
1623 2706 2719	9654-0408-01 9654-0408-14 9654-0308-14	SCREW	
3501 3504 3508	9735-0306-13 9735-0308-13 9735-0408-13	TAPPING SCREW	
3704 3726 3727 3729	9739-0308-13 9739-0408-14 9739-0308-14 9739-0410-14	TAPPING SCREW	
3925	9742-0206-13	TAPPING SCREW	
4020 4021 4025	9743-0408-14 9743-0308-14 9743-0306-14	TAPPING SCREW	
9107	9721-0400-01	RETAINING RING	

INDEX	PART NO.	PART NAME	ILLUST
9301 9302 9303	1066-1151-01 4425-3001-01 4425-3002-01	RETAINING RING	

INDEX	PART NO.	PART NAME	ILLUST

PART NO.	FIG.	INDEX	QTY		PART NO.	FIG.	INDEX	QTY		PART NO.	FIG.	INDEX	QTY		PART NO.	FIG.	INDEX	QTY	
1038-5302-01	01	11	1		4348-2021-01	01	20	1		4348-6806-02	08	04	1		4479-3709-01	07	26	1	
1052-5409-01	09	02	1		4348-2022-01	01	05	2		4348-7305-01	01	07	1		4479-3713-01	07	10	1	
1065-3086-01	04	16	1		4348-2023-01	02	09	4		4348-7306-01	06	01	1		4479-3714-01	07	15	1	
1065-5872-01	10	01	11		4348-2024-01	02	13	2		4348-7307-01	06	11	1		4479-3715-01	07	09	1	
1067-2501-01	04	14	2		4348-2025-02	01	25	4		4348-7308-01	06	24	1		4479-3717-01	07	17	1	
1074-3753-01	08	20	1		4348-2026-01	02	15	1		4348-7309-01	06	15	1		4479-3718-01	07	18	1	
1075-3708-13	09	04	4		4348-2027-01	01	02	1		4348-7310-02	06	22	1		4479-3741-02	09	16	1	
1075-3709-01	09	03	4		4348-2028-01	02	12	1		4349-0902-01	04	28	2		4479-3743-02	09	15	1	
1075-3755-01	09	05	2		4348-2029-01	01	14	1		4425-0104-02	08	30	1		4479-3744-01	08	32	1	
1075-3760-02	02	22	1		4348-2030-01	02	11	1		4425-0231-01	08	16	1		4479-3745-01	08	26	1	
1075-3762-01	02	23	1		4348-2031-01	01	19	1		4425-0240-01	02	25	1		4479-3746-01	09	14	1	
1075-3769-01	09	06	1		4348-2032-01	01	17	2		4425-0753-01	09	20	1		4479-3748-02	08	27	1	
1100-1332-05	08	22	1		4348-2035-01	02	01	1		4425-3013-01	04	24	1		4479-7305-01	01	08	1	
1100-1340-10	06	05	1		4348-2043-01	01	24	4		4425-3016-01	04	20	1		4640-0903-01	02	26	1	
1100-1340-10	07	21	2		4348-3001-01	04	30	1		4425-3039-01	08	33	1		4640-0903-01	07	07	1	
1100-1944-02	07	27	1		4348-3002-01	04	23	1		4425-3709-02	09	13	1		4640-0903-01	08	18	4	
1149-3454-01	03	06	1		4348-3005-03	04	25	1		4425-3710-01	08	38	2		4640-0903-01	09	12	3	
1151-3300-01	01	16	4		4348-3007-01	04	12	1		4425-3714-01	08	28	2		4640-3702-01	06	12	1	
1200-1541-01	08	13	1		4348-3010-01	05	01	1		4425-3715-01	06	02	4		4640-3703-01	06	14	1	
1200-1566-07	08	36	1		4348-3011-03	05	02	1		4425-3723-01	07	11	1		4640-3704-03	09	01	1	
1200-2105-06	08	35	1		4348-3014-02	04	27	1		4425-3723-01	09	09	2		4640-3710-01	02	18	1	
1200-2346-09	07	19	1		4348-3016-02	03	09	1		4425-3726-01	07	08	1		4640-3711-12	06	07	1	
1200-3120-03	07	06	2		4348-3017-01	03	08	1		4425-3726-01	09	17	1		4640-6002-01	06	20	1	
1200-3134-16	08	23	4		4348-3025-01	04	26	1		4425-3729-02	09	11	2		4658-3042-01	01	26	4	
1200-5241-11	06	08	1		4348-3026-01	04	15	1		4425-3730-01	09	18	2		4658-3140-02	01	27	4	
1200-5242-16	02	24	1		4348-3028-01	05	04	1		4425-3731-02	07	12	1		9314-1201-01	01	06	2	
1273-3003-01	08	12	4		4348-3029-01	04	06	1		4425-3731-02	09	08	2		9321-2620-41	02	27	1	
4002-2581-01	01	10	12		4348-3030-01	01	04	2		4425-3732-03	08	08	1		9384-1000-51	10	02	9	
4002-2581-01	02	10	4		4348-3031-01	04	04	2		4425-3733-01	08	07	2		9384-1100-91	10	03	4	
4030-0151-01	05	08	1		4348-3032-01	04	05	1		4425-3734-02	08	17	1		9384-1310-81	10	04	2	
4030-3003-01	04	19	1		4348-3047-01	04	13	1		4425-3735-01	08	10	1		9384-1310-91	10	05	5	
4030-3005-01	04	22	2		4348-3048-01	04	08	1		4425-3740-01	08	11	4		9384-1311-21	10	06	5	
4030-3008-01	04	18	1		4348-3050-02	03	17	1		4425-3741-01	08	09	1		9384-1921-11	10	07	12	
4030-3012-01	04	11	1		4348-3052-01	03	13	1		4425-3742-02	08	15	1		9384-2010-21	10	08	9	
4030-3013-01	05	06	1		4348-3053-01	03	04	1		4425-3743-02	08	37	1		9384-2800-36	10	09	3	
4030-3014-01	05	12	1		4348-3054-01	03	11	1		4425-3744-02	08	24	1		9384-2910-31	10	10	2	
4030-3017-02	05	11	1		4348-3058-01	03	12	1		4425-3745-01	02	20	1						
4030-3020-01	04	10	2		4348-3059-01	01	21	1		4425-3747-01	08	14	1						
4030-3025-02	05	09	1		4348-3060-01	03	15	1		4425-3750-01	02	16	1						
4030-3030-01	04	17	1		4348-3061-01	03	18	1		4425-3751-13	02	17	1						
4030-3034-01	04	21	2		4348-3062-01	05	14	1		4425-3754-01	09	10	1						
4030-3037-01	05	10	1		4348-3063-02	03	14	1		4425-3755-03	08	25	1						
4030-3039-01	05	13	1		4348-3064-01	03	05	1		4425-3756-01	06	18	2						
4030-3077-01	05	05	1		4348-3066-01	03	10	1		4425-3758-02	02	19	1						
4030-3078-01	05	07	1		4348-3067-02	04	29	1		4425-3761-01	06	09	1						
4030-3122-01	03	02	4		4348-3069-01	04	07	1		4425-3762-04	06	06	1						
4030-3123-01	03	03	2		4348-3070-02	04	01	1		4425-3763-01	02	28	1						
4131-0902-01	04	09	3		4348-3071-01	03	01	1		4425-3766-13	02	21	1						
4131-3003-01	04	02	5		4348-3072-01	03	07	1		4425-3770-01	06	03	4						
4131-3532-02	05	03	2		4348-3073-01	05	15	1		4425-3772-01	08	21	1						
4348-0101-03	02	07	1		4348-3102-02	06	16	1		4425-3774-01	08	06	1						
4348-0201-02	03	16	1		4348-3103-01	06	26	1		4425-3775-03	08	29	1						
4348-0202-01	01	03	1		4348-3104-01	06	13	1		4425-3776-01	08	19	1						
4348-0204-02	04	03	1		4348-3107-01	07	02	2		4425-3792-01	06	19	2						
4348-0205-01	06	30	1		4348-3108-02	06	04	1		4425-3799-01	09	19	1						
4348-0206-01	06	10	1		4348-3109-01	07	16	1		4425-7343-01	06	28	1						
4348-0207-01	07	14	1		4348-3111-01	07	05	1		4425-7344-01	06	28	1						
4348-0208-01	07	22	1		4348-3113-01	07	24	1		4444-3741-01	08	01	1						
4348-0751-01	07	13	1		4348-3114-01	07	20	1		4444-3742-01	08	34	1						
4348-0751-01	09	07	1		4348-3116-01	08	31	1		4444-3743-01	08	02	1						
4348-0901-01	01	18	1		4348-3117-01	06	27	1		4444-3744-01	08	03	1						
4348-1001-02	01	09	1		4348-3119-02	06	29	1		4444-3778-13	06	25	1						
4348-1002-01	01	22	1		4348-3121-03	06	23	1		4479-0105-01	08	05	1						
4348-1003-02	01	01	1		4348-3122-01	06	21	1		4479-0203-01	09	21	1						
4348-1004-03	01	23	1		4348-3123-02	06	17	1		4479-3702-02	07	01	2						
4348-1005-02	01	15	1		4348-6801-02	02	03	1		4479-3703-02	07	01	2						
4348-2010-01	02	08	4		4348-6802-03	02	02	1		4479-3704-02	07	04	2						
4348-2014-02	01	13	1		4348-6803-02	02	04	1		4479-3705-01	07	03	1						
4348-2016-01	01	12	1		4348-6804-01	02	05	1		4479-3706-01	07	23	1						
4348-2017-01	02	14	1		4348-6805-02	02	06	1		4479-3708-01	07	25	1						



Copyright

2003 MINOLTA Co., Ltd.

Printed in Japan

Use of this catalog should be strictly supervised to avoid disclosure of confidential information.

MINOLTA Co., Ltd.

4348-7996-21 03061500