MINOLTA

Parts Catalog

The essentials of imaging

PF-124

4348-512

PREFACE

1. The part numbers listed in Parts Catalog are those which were assigned to the parts making up the machine at the time machine was originally introduced onto the market.

2. Parts whose INDEX numbers are shown white against a black background in the illustration are those to be used in only certain market areas. These part numbers are given in the lower half part of the list section. Check the SFIX No. listed in SFIX CHART on page II to find which part number is applicable to your own area.

3. Parts whose INDEX numbers are shown black against a white background in the illustration are those to be used in all market areas. These parts are listed on the upper half part of the list section.

4. If "NS" follows a part number given in the list section, it indicates that we do not keep a stock of the part. The part is not required for ordinary service jobs, either.

5. If "RP" is shown in the REC column of the list section, it indicates that the part is functionally important.

6. In the exploded views in this Parts Catalog the parts (Screws & Washes, etc...) which are indicated with a "four-digit" numbers are listed in numerical order in the section "SCREWS AND WASHERS". Please check these "four-digit" numbers with the part numbers ("ten-digit" numbers) which should be used for ordering the part.

7. All part numbers consist of "ten-digit" which should all be quoted when ordering a part. The price of parts can be obtained by referring to the "Parts Price List" which is separately issued.

8. All infomation contained in this Parts Catalog is subject to change.

CONTENTS

1. CABINET HOUSING (A) 1
2. CABINET HOUSING (B) 3
3. PAPER TRANSPORT SECTION 5
4. PAPER TAKE-UP SECTION 7
5. PAER TRAY UNIT 9
6. RECEIPT TRAY 11
7. WIRING ACCESSORIES AND JIGS 13
8. SCREWS AND WASHERS 15
9. NUMERICAL INDEX 16

JUNE 2003

1 CABINET HOUSING (A) PF-124

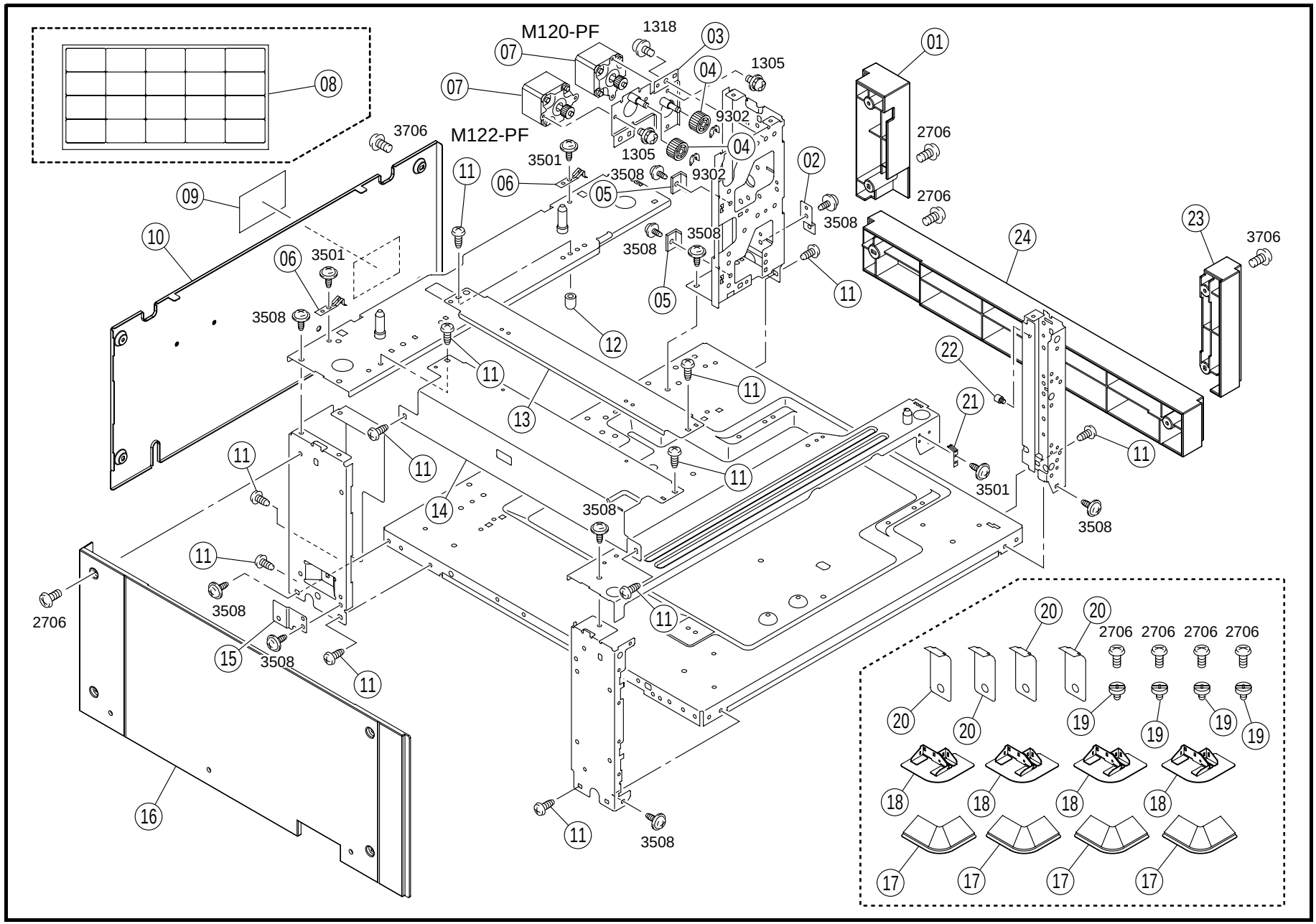

INDEX	PART NO.		PART NAME	REC	QTY
01	4348-1003-02		COVER		1
02	4348-2027-01	NS	BRACKET		1
03	4348-0202-01	NS	FRAME ASSY		1
04	4348-3030-01		GEAR		2
05	4348-2040-01		SPACER		2
06	4348-2022-01		PLATE SPRING		2
07	9314-1201-01		MOTOR (M120.122-PF)		2
08	4030-7312-01		LABEL		1
09	4479-7305-01		LABEL CAUTION		1
10	4348-1001-02		COVER		1
11	4002-2581-01		SCREW		12
12	1038-5302-01		CAP		1
13	4348-2016-01	NS	REINFORCE PLATE		1
14	4348-2014-02	NS	REINFORCE PLATE		1
15	4348-2029-01	NS	BRACKET		1
16	4348-1005-02		COVER		1
17	4348-2043-01		COVER		4
18	4348-2025-02		STOP PLATE		4
19	4658-3042-01		SHOULDER SCREW		4
20	4658-3140-02		STOP PLATE		4
21	4348-2021-01		PLATE SPRING		1
22	4348-3059-01		SHOULDER SCREW		1
23	4348-1002-01		COVER		1
24	4348-1004-03		COVER		1

INDEX	PART NO.	PART NAME	REC	QTY	SFIX

2 CABINET HOUSING (B) PF-124

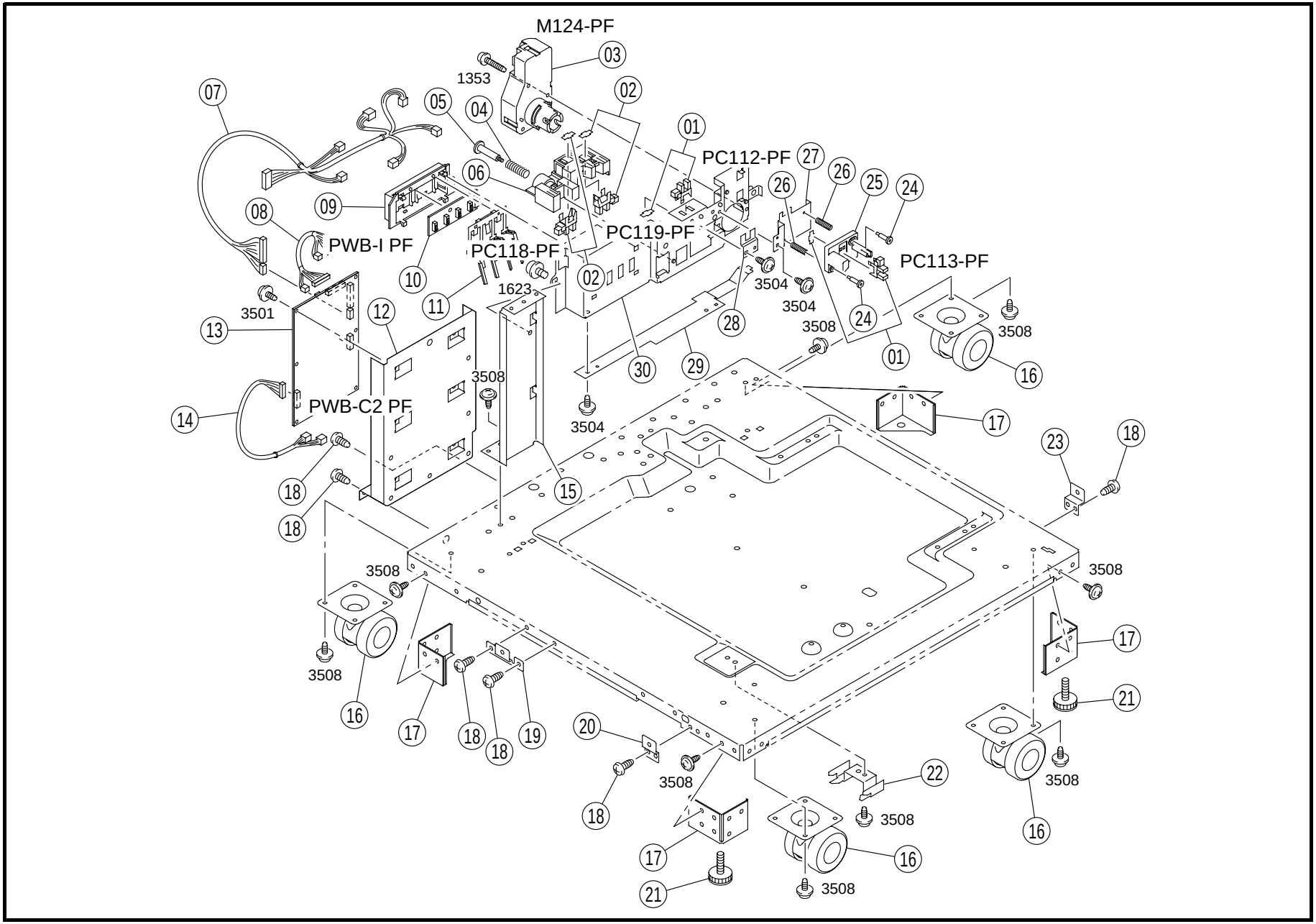

INDEX	PART NO.		PART NAME		REC	QTY
01	4131-0902-01		PHOTO INTERRUPTER	(PC112.113-PF)		2
02	4131-0902-01		PHOTO INTERRUPTER	(PC118.119-PF)		2
03	9312-1200-31		MOTOR	LIFT-UP (M124-PF)		1
04	4002-3110-01		PRESSURE SPRING			1
05	4002-3131-01		SHOULDER SCREW			1
06	4030-3047-02		HOLDER			1
07	4348-6810-01		WIRE HARNESS ASSY			1
08	4348-6801-02		WIRE HARNESS ASSY			1
09	4011-3012-01		HOLDER			1
10	4011-0111-01		PWB ASSY	(PWB-I PF)	RP	1
11	1164-3020-03		LEVER			1
12	4348-2036-01	NS	BRACKET			1
13	4348-0102-03		PWB ASSY	(PWB-C2 PF)	RP	1
14	4348-6811-02		WIRE HARNESS ASSY			1
15	4348-2006-01	NS	BRACKET			1
16	4348-2010-01		CASTOR			4
17	4348-2023-01		STOP PLATE			4
18	4002-2581-01		SCREW			6
19	4348-2030-01	NS	BRACKET			1
20	4348-2028-01	NS	BRACKET			1
21	4348-2024-01		ADJUSTING PLATE			2
22	4348-2017-01	NS	BRACKET			1
23	4348-2026-01	NS	BRACKET			1
24	4030-3224-01		SHOULDER SCREW			2
25	4030-3083-01		HOLDER			1
26	4030-3081-01		PRESSURE SPRING			2
27	4030-3208-02	NS	BRACKET			1
28	4030-3048-02	NS	BRACKET			1
29	4030-3049-01	NS	BRACKET			1
30	4030-3046-03	NS	BRACKET			1

INDEX	PART NO.	PART NAME	REC	QTY	SFIX

3 PAPER TRANSPORT SECTION PF-124

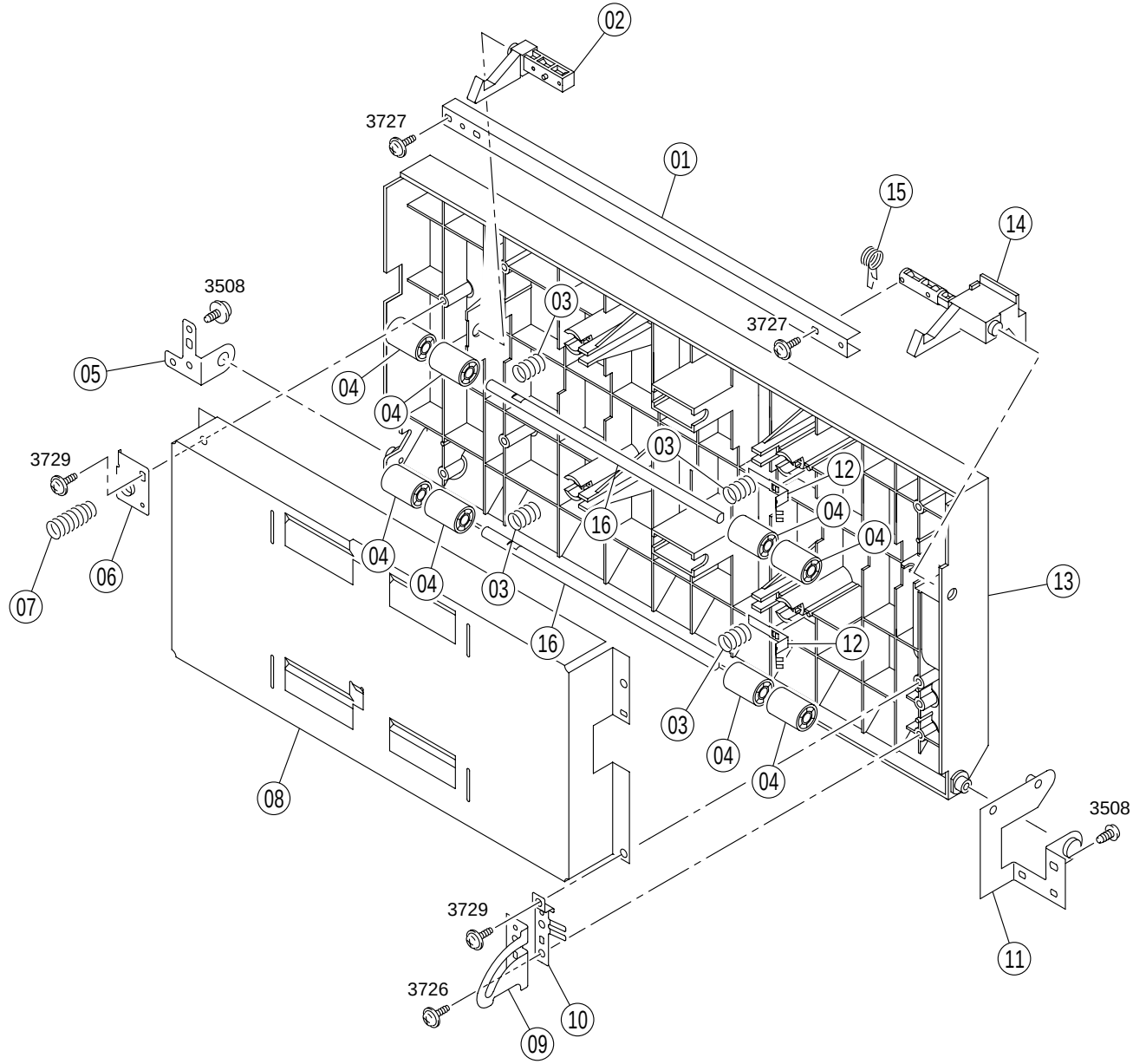

INDEX	PART NO.		PART NAME	REC	QTY	INDEX	PART NO.	PART NAME	REC	QTY
01	4348-3054-01		BRACKET		1					
02	4348-3053-01		PAWL		1					
03	4030-3123-01		PRESSURE SPRING		4					
04	4030-3122-01		ROLL		8					
05	4348-3064-01	NS	BRACKET		1					
06	4348-3072-01	NS	BRACKET		1					
07	1149-3454-01		PRESSURE SPRING		1					
08	4348-3051-01		GUIDE		1					
09	4348-3063-02		STOPPER		1					
10	4348-3060-01		EARTH GROUND		1					
11	4348-0201-02	NS	BRACKET ASSY		1					
12	4348-3061-01		EARTH GROUND		2					
13	4348-3050-02		DOOR		1					
14	4348-3052-01		PAWL		1					
15	4348-3058-01		TORSION SPRING		1					
16	4348-3071-01	NS	SHAFT		2					

INDEX	PART NO.	PART NAME	REC	QTY	SFIX

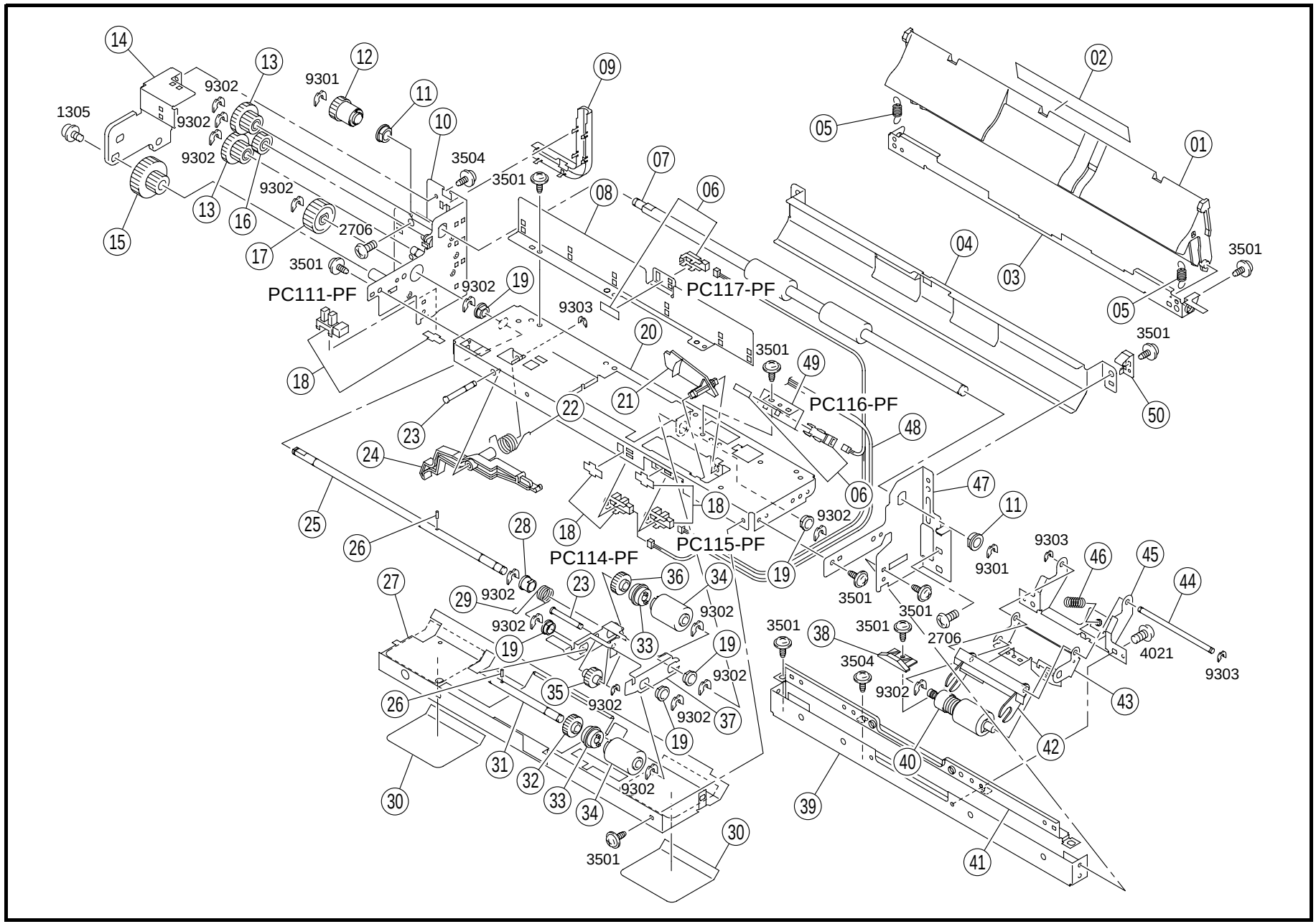
14
13
12
11
10
09
02
05
01
1305
9302
9301
9302
9302
3504
3501
07
08
06
04
03
3501
05
9302
2706
3501
16
17
15
13
PC111-PF
9302
19
9303
PC117-PF
20
3501
49
3501
50
18
21
22
PC116-PF
23
24
48
06
47
11
25
26
28
18
18
PC115-PF
9302
19
9303
46
45
44
9301
PC114-PF
3501
3501
3501
27
29
9302
23
36
34
9302
9302
19
33
19
19
9302
3501
38
3501
2706
4021
9303
3504
9302
35
9302
9302
37
43
26
19
42
31
32
33
34
9302
40
30
39
3501
30
41

INDEX	PART NO.		PART NAME		REC	QTY
01	4030-3124-03		GUIDE			1
02	4030-3105-01		GUIDE			1
03	4030-3129-03	NS	BRACKET			1
04	4348-3042-01		GUIDE PLATE			1
05	4030-3125-01		TENSION SPRING			2
06	4349-0902-01		SOLID STATE SWITCH	(PC116.117-PF)		2
07	4348-3011-03		ROLLER	TRANSPORT	RP	1
08	4348-3046-01	NS	BRACKET			1
09	4348-3070-02		COVER			1
10	4348-0203-02	NS	FRAME ASSY			1
11	4131-3532-02		BUSHING			2
12	4348-3028-01		GEAR			1
13	4348-3031-01		GEAR			2
14	4348-3069-01	NS	BRACKET			1
15	4348-3048-01		GEAR			1
16	4348-3032-01		GEAR			1
17	4348-3029-01		GEAR			1
18	4131-0902-01		PHOTO INTERRUPTER	(PC111.114.115-PF)		3
19	4131-3003-01		BUSHING			5
20	4030-3010-01	NS	FRAME			1
21	4030-3016-01		ACTUATOR			1
22	4030-3012-01		TORSION SPRING			1
23	4030-3020-01	NS	SHAFT			2
24	4030-3011-01		LEVER			1
25	4348-3047-01	NS	SHAFT			1

INDEX	PART NO.		PART NAME		REC	QTY
26	1067-2501-01		PIN			2
27	4030-3023-03	NS	GUIDE PLATE			1
28	1065-3086-01		BUSHING			1
29	4030-3030-01		TORSION SPRING			1
30	4030-3036-01		GUIDE			2
31	4030-3003-01		SHAFT			1
32	4425-3016-01		GEAR			1
33	4030-3034-01		CLUTCH			2
34	4030-3005-01		ROLLER	TAKE-UP	RP	2
35	4030-3008-01		GEAR			1
36	4425-3013-01		GEAR			1
37	4030-3002-02	NS	HOLDER			1
38	4030-3078-01		LEVER			1
39	4030-3025-02	NS	BRACKET			1
40	4030-0151-01		ROLLER ASSY	SEPARATOR	RP	1
41	4030-3037-01	NS	REINFORCE PLATE			1
42	4030-3077-01		GUIDE			1
43	4030-3013-01	NS	HOLDER			1
44	4030-3039-01		SHAFT			1
45	4030-3014-01	NS	BRACKET			1
46	4030-3017-02		PRESSURE SPRING			1
47	4348-3044-03	NS	FRAME			1
48	4348-6812-02		WIRE HARNESS ASSY			1
49	4348-3049-01	NS	BRACKET			1
50	4348-3073-01		PLATE SPRING			1

INDEX	PART NO.	PART NAME	REC	QTY	SFIX

5 PAER TRAY UNIT PF-124

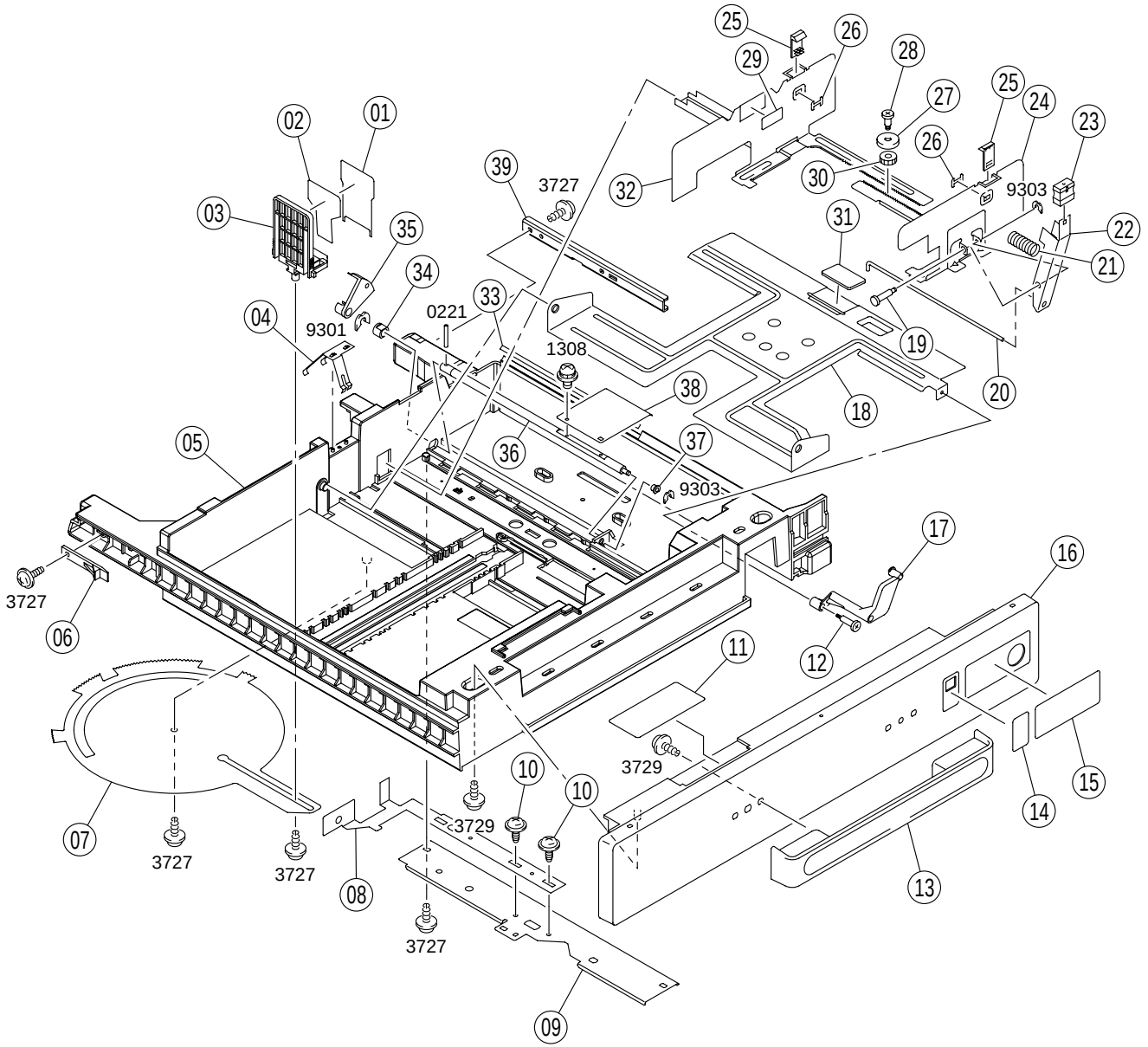

INDEX	PART NO.		PART NAME	REC	QTY
01	4030-3228-01		GUIDE		1
02	4030-3227-01		GUIDE		1
03	4030-3213-01		REGULATING PLATE		1
04	4030-3223-02		EARTH GROUND		1
05	4030-3201-03	NS	CASSETTE		1
06	4498-3469-01		STOPPER		1
07	4002-3108-01	NS	LEVER		1
08	4030-3216-01	NS	BRACKET		1
09	4030-3218-01		BRACKET		1
10	4498-3834-01		SCREW		2
11	4030-7304-02		LABEL		1
12	4030-3224-01		SHOULDER SCREW		1
13	4030-3225-01		HANDLE		1
14	4030-7301-02		LABEL		1
15	4348-7303-02		LABEL		1
16	4348-3202-02		COVER		1
17	4030-3221-01		LEVER		1
18	4030-3203-01	NS	LIFTING PLATE		1
19	4498-3826-01		SHAFT		1
20	4030-3217-01	NS	SHAFT		1
21	4498-3825-01		PRESSURE SPRING		1
22	4128-3823-01		LEVER		1
23	4498-3804-01		KNOB		1
24	4030-3211-02	NS	REGULATING PLATE		1
25	4658-3048-01		GUIDE		2
26	4658-3049-01		STOPPER		2
27	4030-3215-01		GUIDE		1
28	4030-3214-01		SHOULDER SCREW		1
29	4002-7306-01		LABEL		1
30	4658-3012-01		GEAR		1
31	4030-3226-01		FRICTION SHEET		1
32	4030-3212-01	NS	REGULATING PLATE		1
33	4030-3222-01		GUIDE		1
34	1274-3603-01		BUSHING		1
35	4030-3207-01		ACTUATOR		1
36	4030-3205-01	NS	SHAFT		1
37	0992-3014-01		BUSHING		1
38	4030-3206-01	NS	LEVER		1
39	4030-3229-02	NS	REINFORCE PLATE		1

INDEX	PART NO.	PART NAME	REC	QTY	SFIX

6 RECEIPT TRAY PF-124

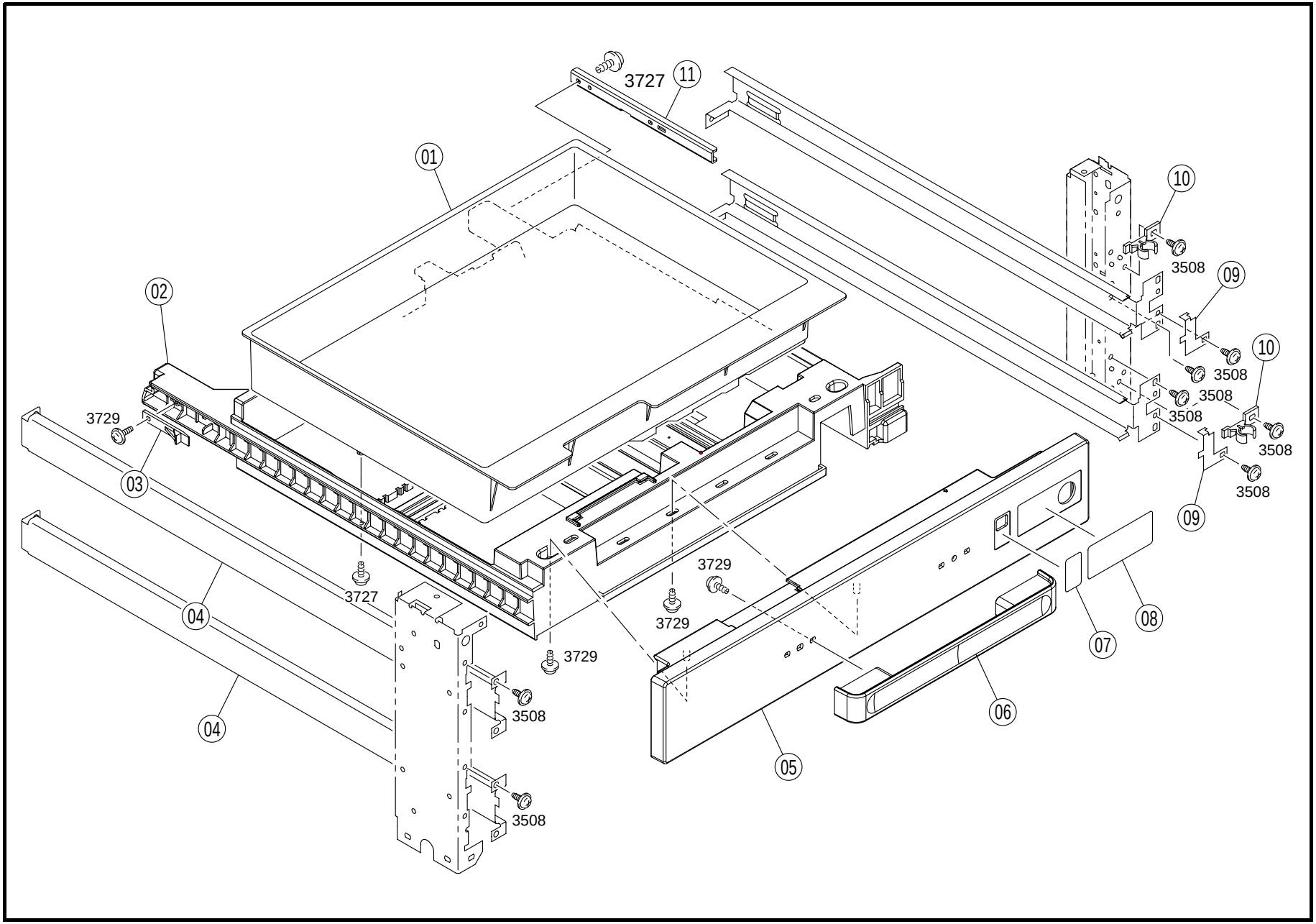

INDEX	PART NO.		PART NAME	REC	QTY	INDEX	PART NO.	PART NAME	REC	QTY
01	4348-3201-01		CASSETTE		1					
02	4030-3201-03	NS	CASSETTE		1					
03	4498-3469-01		STOPPER		1					
04	4348-2041-02	NS	BRACKET		2					
05	4348-3202-02		COVER		1					
06	4030-3225-01		HANDLE		1					
07	4348-7301-02		LABEL		1					
08	4348-7302-02		LABEL		1					
09	4348-2038-02	NS	BRACKET		2					
10	4348-2037-01		HOLDER		2					
11	4030-3229-02	NS	REINFORCE PLATE		1					

INDEX	PART NO.	PART NAME	REC	QTY	SFIX

7 WIRING ACCESSORIES AND JIGS PF-124

⑴ 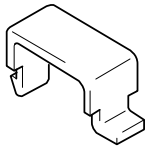	⑹ 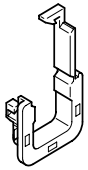						
⑵ 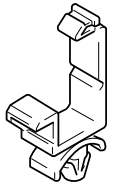							
⑶ 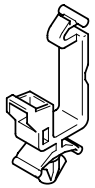							
⑷ 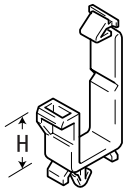							
⑸ 							

INDEX	PART NO.	PART NAME	REC	QTY	INDEX	PART NO.	PART NAME	REC	QTY
01	1065-5872-01	CORD CLAMP		11					
02	9384-1000-51	WIRING SADDLE		6					
03	9384-1100-91	WIRING SADDLE		4					
04	9384-1921-11	WIRING SADDLE 9.2H		9					
05	9384-2010-21	EDGE COVER 8.5H		7					
06	9384-2910-31	EDGE COVER		3					

INDEX	PART NO.	PART NAME	REC	QTY	SFIX

8 SCREWS AND WASHERS PF-124

INDEX	PART NO.	PART NAME	ILLUST
0221 0224	9754-3025-08 9754-3018-08	SPRING ROLL PIN	
0502 0510	9752-3012-50 9752-3014-50	PIN	
1111	9642-0306-13	SCREW	
1277	9644-2606-13	SCREW	
1305 1308 1318 1353	9646-0306-13 9646-0308-13 9646-0408-13 9646-0330-13	SCREW	
1623 2706	9654-0408-01 9654-0408-14	SCREW	
3501 3504 3508	9735-0306-13 9735-0308-13 9735-0408-13	TAPPING SCREW	
3704 3726 3727 3729	9739-0308-13 9739-0408-14 9739-0308-14 9739-0410-14	TAPPING SCREW	
3925	9742-0206-13	TAPPING SCREW	
4020 4021 4025	9743-0408-14 9743-0308-14 9743-0306-14	TAPPING SCREW	
9107	9721-0400-01	RETAINING RING	
9301 9302 9303	1066-1151-01 4425-3001-01 4425-3002-01	RETAINING RING	

PART NO.	FIG.	INDEX	QTY		PART NO.	FIG.	INDEX	QTY		PART NO.	FIG.	INDEX	QTY		PART NO.	FIG.	INDEX	QTY	
0992-3014-01	05	37	1		4030-3225-01	05	13	1		4348-3070-02	04	09	1						
1038-5302-01	01	12	1		4030-3225-01	06	06	1		4348-3071-01	03	16	2						
1065-3086-01	04	28	1		4030-3226-01	05	31	1		4348-3072-01	03	06	1						
1065-5872-01	07	01	11		4030-3227-01	05	02	1		4348-3073-01	04	50	1						
1067-2501-01	04	26	2		4030-3228-01	05	01	1		4348-3201-01	06	01	1						
1149-3454-01	03	07	1		4030-3229-02	05	39	1		4348-3202-02	05	16	1						
1164-3020-03	02	11	1		4030-3229-02	06	11	1		4348-3202-02	06	05	1						
1274-3603-01	05	34	1		4030-7301-02	05	14	1		4348-6801-02	02	08	1						
4002-2581-01	01	11	12		4030-7304-02	05	11	1		4348-6810-01	02	07	1						
4002-2581-01	02	18	6		4030-7312-01	01	08	1		4348-6811-02	02	14	1						
4002-3108-01	05	07	1		4128-3823-01	05	22	1		4348-6812-02	04	48	1						
4002-3110-01	02	04	1		4131-0902-01	02	01	2		4348-7301-02	06	07	1						
4002-3131-01	02	05	1		4131-0902-01	02	02	2		4348-7302-02	06	08	1						
4002-7306-01	05	29	1		4131-0902-01	04	18	3		4348-7303-02	05	15	1						
4011-0111-01	02	10	1		4131-3003-01	04	19	5		4349-0902-01	04	06	2						
4011-3012-01	02	09	1		4131-3532-02	04	11	2		4425-3013-01	04	36	1						
4030-0151-01	04	40	1		4348-0102-03	02	13	1		4425-3016-01	04	32	1						
4030-3002-02	04	37	1		4348-0201-02	03	11	1		4479-7305-01	01	09	1						
4030-3003-01	04	31	1		4348-0202-01	01	03	1		4498-3469-01	05	06	1						
4030-3005-01	04	34	2		4348-0203-02	04	10	1		4498-3469-01	06	03	1						
4030-3008-01	04	35	1		4348-1001-02	01	10	1		4498-3804-01	05	23	1						
4030-3010-01	04	20	1		4348-1002-01	01	23	1		4498-3825-01	05	21	1						
4030-3011-01	04	24	1		4348-1003-02	01	01	1		4498-3826-01	05	19	1						
4030-3012-01	04	22	1		4348-1004-03	01	24	1		4498-3834-01	05	10	2						
4030-3013-01	04	43	1		4348-1005-02	01	16	1		4658-3012-01	05	30	1						
4030-3014-01	04	45	1		4348-2006-01	02	15	1		4658-3042-01	01	19	4						
4030-3016-01	04	21	1		4348-2010-01	02	16	4		4658-3048-01	05	25	2						
4030-3017-02	04	46	1		4348-2014-02	01	14	1		4658-3049-01	05	26	2						
4030-3020-01	04	23	2		4348-2016-01	01	13	1		4658-3140-02	01	20	4						
4030-3023-03	04	27	1		4348-2017-01	02	22	1		9312-1200-31	02	03	1						
4030-3025-02	04	39	1		4348-2021-01	01	21	1		9314-1201-01	01	07	2						
4030-3030-01	04	29	1		4348-2022-01	01	06	2		9384-1000-51	07	02	6						
4030-3034-01	04	33	2		4348-2023-01	02	17	4		9384-1100-91	07	03	4						
4030-3036-01	04	30	2		4348-2024-01	02	21	2		9384-1921-11	07	04	9						
4030-3037-01	04	41	1		4348-2025-02	01	18	4		9384-2010-21	07	05	7						
4030-3039-01	04	44	1		4348-2026-01	02	23	1		9384-2910-31	07	06	3						
4030-3046-03	02	30	1		4348-2027-01	01	02	1											
4030-3047-02	02	06	1		4348-2028-01	02	20	1											
4030-3048-02	02	28	1		4348-2029-01	01	15	1											
4030-3049-01	02	29	1		4348-2030-01	02	19	1											
4030-3077-01	04	42	1		4348-2036-01	02	12	1											
4030-3078-01	04	38	1		4348-2037-01	06	10	2											
4030-3081-01	02	26	2		4348-2038-02	06	09	2											
4030-3083-01	02	25	1		4348-2040-01	01	05	2											
4030-3105-01	04	02	1		4348-2041-02	06	04	2											
4030-3122-01	03	04	8		4348-2043-01	01	17	4											
4030-3123-01	03	03	4		4348-3011-03	04	07	1											
4030-3124-03	04	01	1		4348-3028-01	04	12	1											
4030-3125-01	04	05	2		4348-3029-01	04	17	1											
4030-3129-03	04	03	1		4348-3030-01	01	04	2											
4030-3201-03	05	05	1		4348-3031-01	04	13	2											
4030-3201-03	06	02	1		4348-3032-01	04	16	1											
4030-3203-01	05	18	1		4348-3042-01	04	04	1											
4030-3205-01	05	36	1		4348-3044-03	04	47	1											
4030-3206-01	05	38	1		4348-3046-01	04	08	1											
4030-3207-01	05	35	1		4348-3047-01	04	25	1											
4030-3208-02	02	27	1		4348-3048-01	04	15	1											
4030-3211-02	05	24	1		4348-3049-01	04	49	1											
4030-3212-01	05	32	1		4348-3050-02	03	13	1											
4030-3213-01	05	03	1		4348-3051-01	03	08	1											
4030-3214-01	05	28	1		4348-3052-01	03	14	1											
4030-3215-01	05	27	1		4348-3053-01	03	02	1											
4030-3216-01	05	08	1		4348-3054-01	03	01	1											
4030-3217-01	05	20	1		4348-3058-01	03	15	1											
4030-3218-01	05	09	1		4348-3059-01	01	22	1											
4030-3221-01	05	17	1		4348-3060-01	03	10	1											
4030-3222-01	05	33	1		4348-3061-01	03	12	2											
4030-3223-02	05	04	1		4348-3063-02	03	09	1											
4030-3224-01	02	24	2		4348-3064-01	03	05	1											
4030-3224-01	05	12	1		4348-3069-01	04	14	1											



Copyright

2003 MINOLTA Co., Ltd.

Printed in Japan

Use of this catalog should be strictly supervised to avoid disclosure of confidential information.

MINOLTA Co., Ltd.

4348-7994-21 03061000