MINOLTA

Parts Catalog

The essentials of imaging

PF-210

4348-411

PREFACE

1. The part numbers listed in Parts Catalog are those which were assigned to the parts making up the machine at the time machine was originally introduced onto the market.

2. Parts whose INDEX numbers are shown white against a black background in the illustration are those to be used in only certain market areas. These part numbers are given in the lower half part of the list section. Check the SFIX No. listed in SFIX CHART on page II to find which part number is applicable to your own area.

3. Parts whose INDEX numbers are shown black against a white background in the illustration are those to be used in all market areas. These parts are listed on the upper half part of the list section.

4. If "NS" follows a part number given in the list section, it indicates that we do not keep a stock of the part. The part is not required for ordinary service jobs, either.

5. If "RP" is shown in the REC column of the list section, it indicates that the part is functionally important.

6. In the exploded views in this Parts Catalog the parts (Screws & Washes, etc...) which are indicated with a "four-digit" numbers are listed in numerical order in the section "SCREWS AND WASHERS". Please check these "four-digit" numbers with the part numbers ("ten-digit" numbers) which should be used for ordering the part.

7. All part numbers consist of "ten-digit" which should all be quoted when ordering a part. The price of parts can be obtained by referring to the "Parts Price List" which is separately issued.

8. All infomation contained in this Parts Catalog is subject to change.

SFIX CHART

SFIX No.	COUNTRY	VOLTAGE	FREQUENCY (Hz)	PAPER SIZE	SFIX No.	COUNTRY	VOLTAGE	FREQUENCY (Hz)	PAPER SIZE
411	JAPAN	-	-	-	412	EXCEPT JAPAN	-	-	-

CONTENTS

1. CABINET HOUSING (A) ••••••

1 CABINET HOUSING (A) PF-210

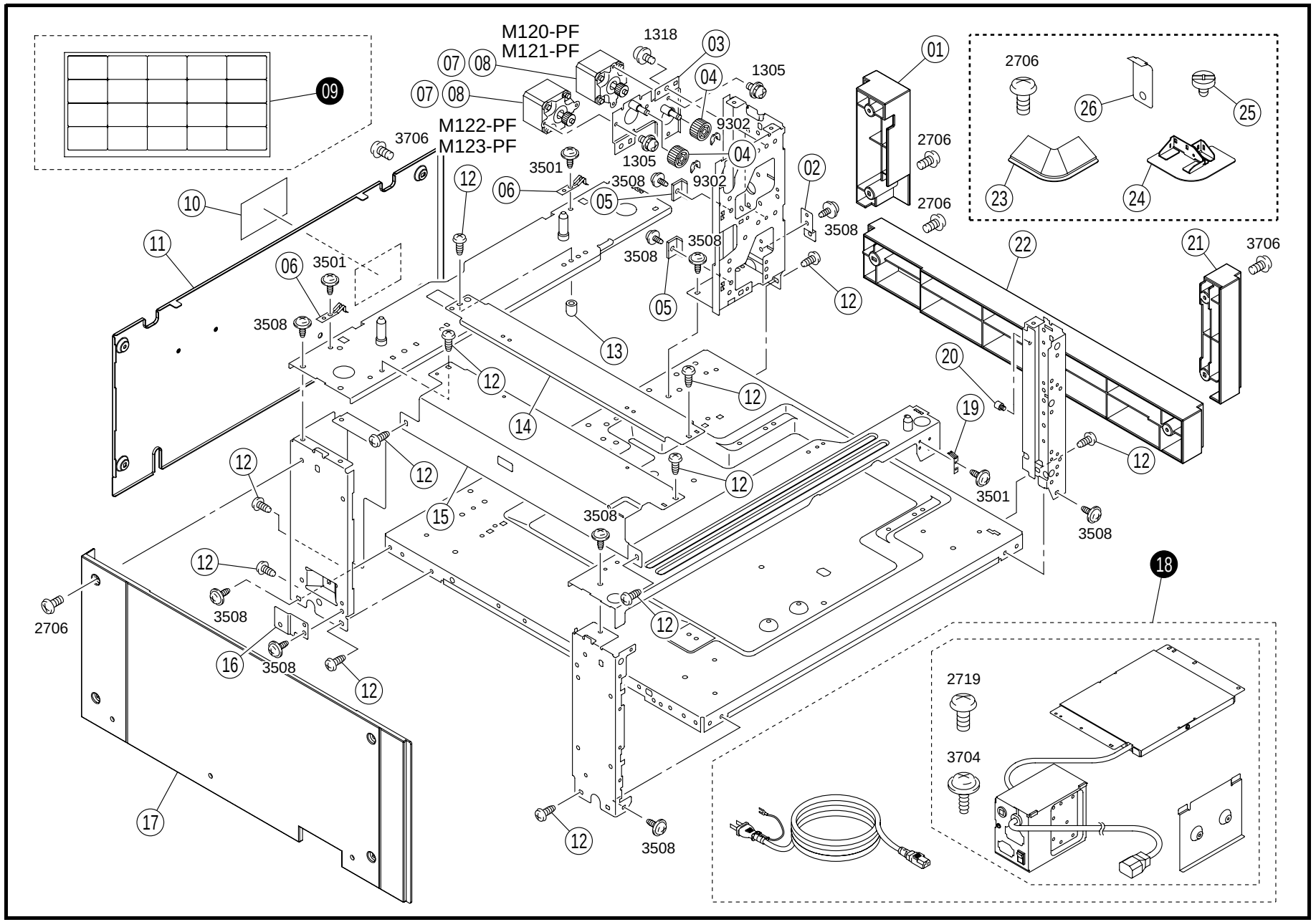

INDEX	PART NO.		PART NAME		REC	QTY
01	4348-1003-02		COVER			1
02	4348-2027-01	NS	BRACKET			1
03	4348-0202-01	NS	FRAME ASSY			2
04	4348-3030-01		GEAR			4
05	4348-2040-01		SPACER			2
06	4348-2022-01		PLATE SPRING			2
07	9314-1201-01		MOTOR	(M120.122-PF)		2
08	9314-1201-01		MOTOR	(M121.123-PF)		2
10	4479-7305-01		LABEL CAUTION			1
11	4348-1001-02		COVER			1
12	4002-2581-01		SCREW			9
13	1038-5302-01		CAP			1
14	4348-2016-01	NS	REINFORCE PLATE			1
15	4348-2014-02	NS	REINFORCE PLATE			1
16	4348-2029-01	NS	BRACKET			1
17	4348-1005-02		COVER			1
19	4348-2021-01		PLATE SPRING			1
20	4348-3059-01		SHOULDER SCREW			1

INDEX	PART NO.		PART NAME		REC	QTY
21	4348-1002-01		COVER			1
22	4348-1004-03		COVER			1
23	4348-2043-01		COVER	SET UP PARTS		4
24	4348-2025-02		STOP PLATE	SET UP PARTS		5
25	4658-3042-01		SHOULDER SCREW	SET UP PARTS		4
26	4658-3140-02		STOP PLATE	SET UP PARTS		4

INDEX	PART NO.		PART NAME		REC	QTY	SFIX
09	4030-7310-01		LABEL	SET UP PARTS		1	411
09	4030-7312-01		LABEL	SET UP PARTS		1	412
18	4348-0121-01		HEATER ASSY			1	411

2 CABINET HOUSING (B) PF-210

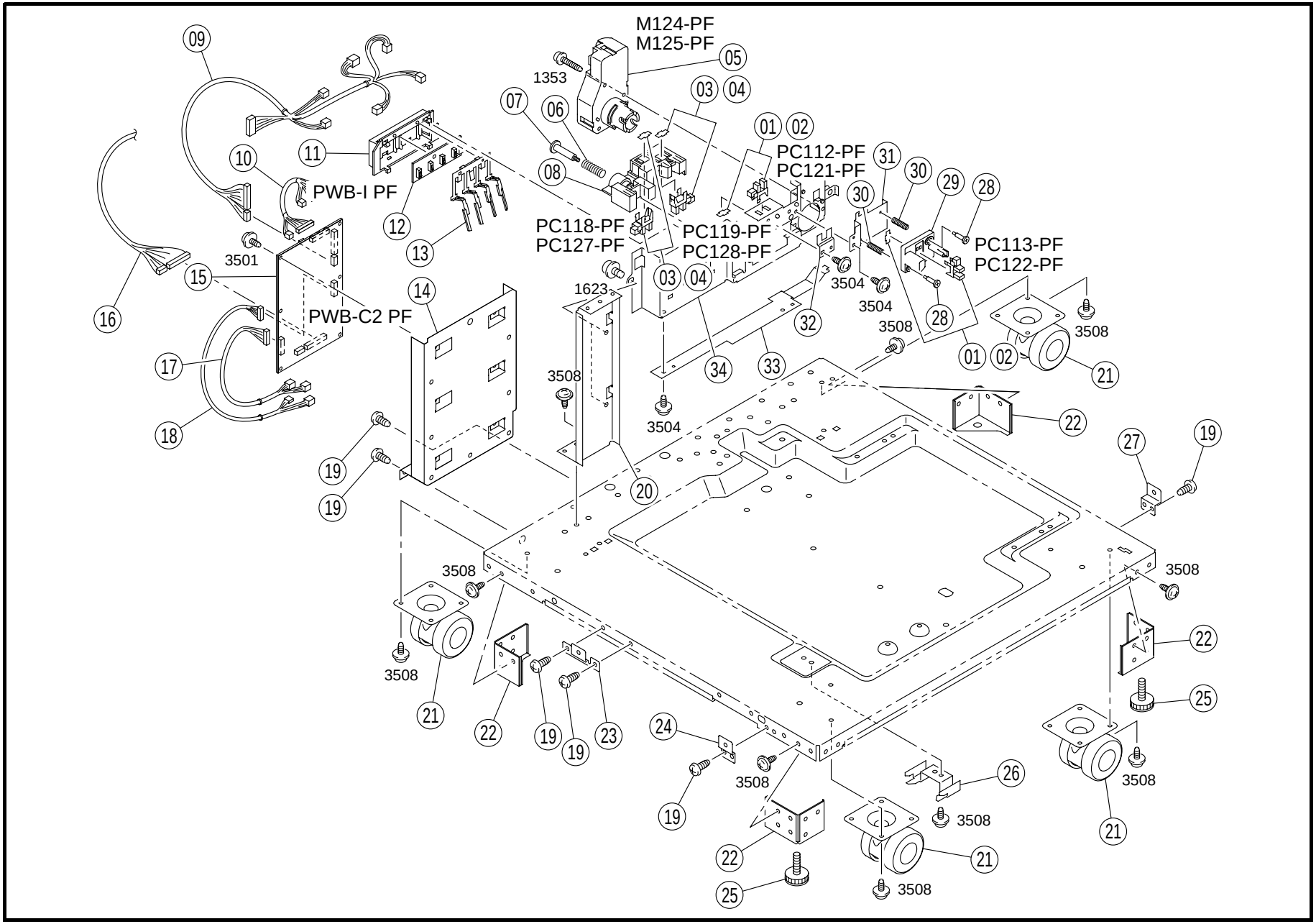

INDEX	PART NO.		PART NAME		REC	QTY
01	4131-0902-01		PHOTO INTERRUPTER	(PC112.113-PF)		2
02	4131-0902-01		PHOTO INTERRUPTER	(PC121.122-PF)		2
03	4131-0902-01		PHOTO INTERRUPTER	(PC118.119-PF)		2
04	4131-0902-01		PHOTO INTERRUPTER	(PC127.128-PF)		2
05	9312-1200-31		MOTOR	LIFT-U(M124.125-PF)		2
06	4002-3110-01		PRESSURE SPRING			2
07	4002-3131-01		SHOULDER SCREW			2
08	4030-3047-02		HOLDER			2
09	4348-6810-01		WIRE HARNESS ASSY			1
10	4348-6801-02		WIRE HARNESS ASSY			1
11	4011-3012-01		HOLDER			2
12	4011-0111-01		PWB ASSY	(PWB-I PF)	RP	2
13	1164-3020-03		LEVER			2
14	4348-2036-01	NS	BRACKET			1
15	4348-0102-03		PWB ASSY	(PWB-C2 PF)	RP	1
16	4348-6813-01		WIRE HARNESS ASSY			1
17	4348-6811-02		WIRE HARNESS ASSY			1
18	4348-6814-02		WIRE HARNESS ASSY			1
19	4002-2581-01		SCREW			6
20	4348-2006-01	NS	BRACKET			1
21	4348-2010-01		CASTOR			4
22	4348-2023-01		STOP PLATE			4
23	4348-2030-01	NS	BRACKET			1
24	4348-2028-01	NS	BRACKET			1
25	4348-2024-01		ADJUSTING PLATE			2
26	4348-2017-01	NS	BRACKET			1
27	4348-2026-01	NS	BRACKET			1
28	4030-3224-01		SHOULDER SCREW			4
29	4030-3083-01		HOLDER			2
30	4030-3081-01		PRESSURE SPRING			4
31	4030-3208-02	NS	BRACKET			2
32	4030-3048-02	NS	BRACKET			2
33	4030-3049-01	NS	BRACKET			2
34	4030-3046-03	NS	BRACKET			2

INDEX	PART NO.	PART NAME	REC	QTY	SFIX

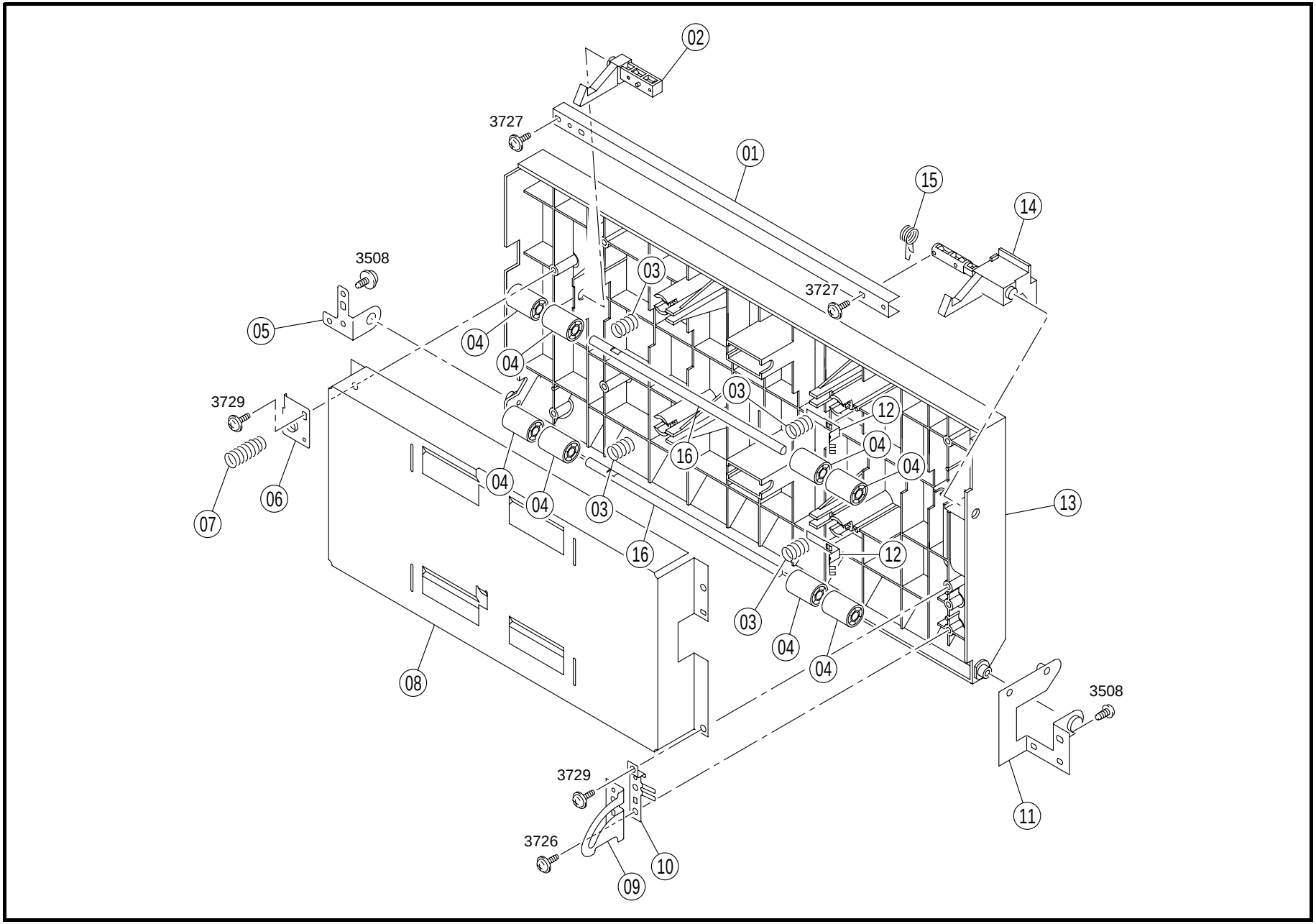
02
3727
01
15
14
3508
03
3727
05
04
04
3729
03
12
04
16
04
04
07
06
04
03
13
16
12
03
04
04
08
3508
3729
11
3726
10
09

INDEX	PART NO.		PART NAME	REC	QTY	INDEX	PART NO.	PART NAME	REC	QTY
01	4348-3054-01		BRACKET		1					
02	4348-3053-01		PAWL		1					
03	4030-3123-01		PRESSURE SPRING		4					
04	4030-3122-01		ROLL		8					
05	4348-3064-01	NS	BRACKET		1					
06	4348-3072-01	NS	BRACKET		1					
07	1149-3454-01		PRESSURE SPRING		1					
08	4348-3051-01		GUIDE		1					
09	4348-3063-02		STOPPER		1					
10	4348-3060-01		EARTH GROUND		1					
11	4348-0201-02	NS	BRACKET ASSY		1					
12	4348-3061-01		EARTH GROUND		2					
13	4348-3050-02		DOOR		1					
14	4348-3052-01		PAWL		1					
15	4348-3058-01		TORSION SPRING		1					
16	4348-3071-01	NS	SHAFT		2					

INDEX	PART NO.	PART NAME	REC	QTY	SFIX

4 UPPER PAPER TAKE-UP SECTION PF-210

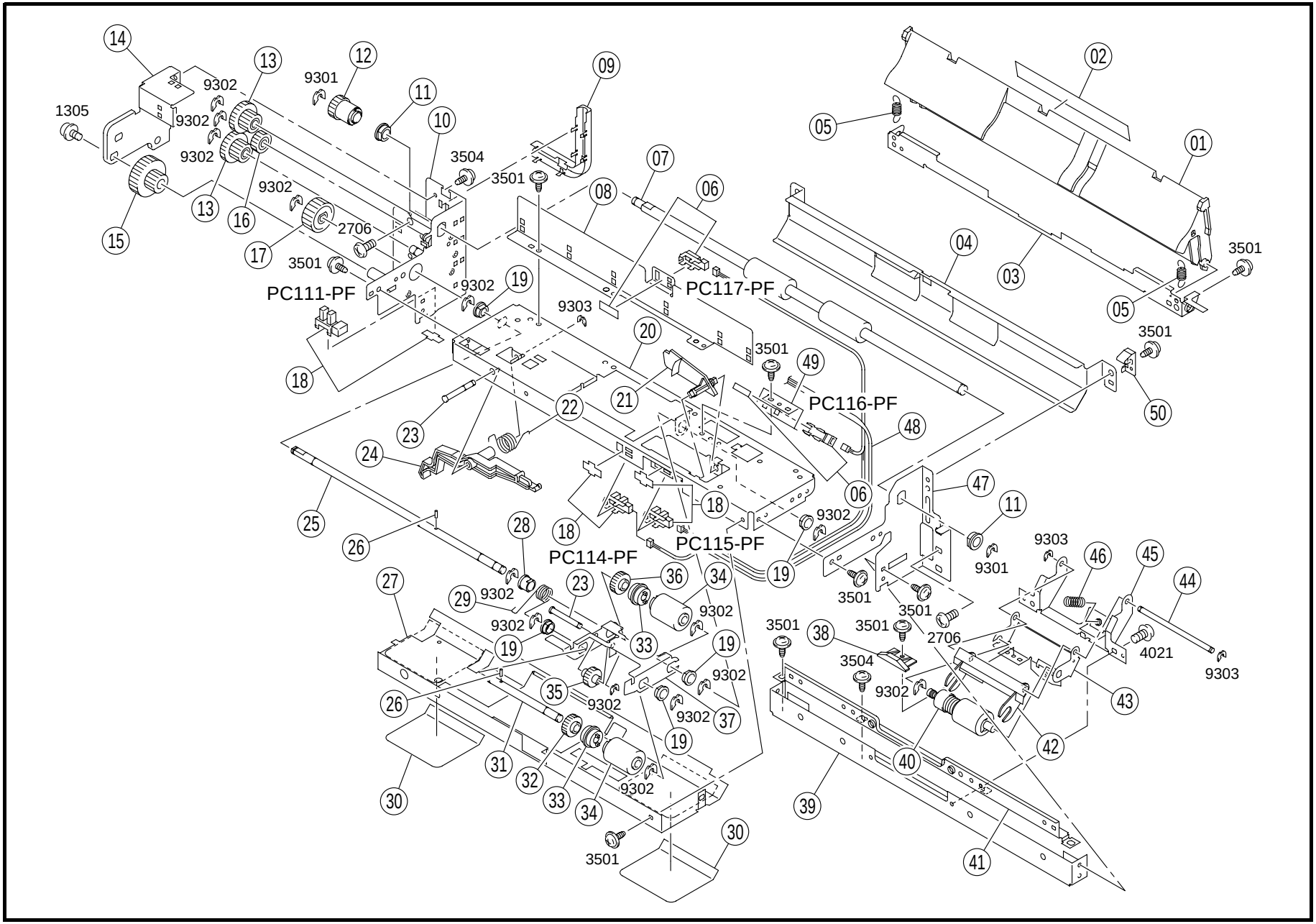

INDEX	PART NO.		PART NAME		REC	QTY
01	4030-3124-03		GUIDE			1
02	4030-3105-01		GUIDE			1
03	4030-3129-03	NS	BRACKET			1
04	4348-3042-01		GUIDE PLATE			1
05	4030-3125-01		TENSION SPRING			2
06	4349-0902-01		SOLID STATE SWITCH	(PC116.117-PF)		2
07	4348-3011-03		ROLLER	TRANSPORT	RP	1
08	4348-3046-01	NS	BRACKET			1
09	4348-3070-02		COVER			1
10	4348-0203-02	NS	FRAME ASSY			1
11	4131-3532-02		BUSHING			2
12	4348-3028-01		GEAR			1
13	4348-3031-01		GEAR			2
14	4348-3069-01	NS	BRACKET			1
15	4348-3048-01		GEAR			1
16	4348-3032-01		GEAR			1
17	4348-3029-01		GEAR			1
18	4131-0902-01		PHOTO INTERRUPTER	(PC111.114.115-PF)		3
19	4131-3003-01		BUSHING			5
20	4030-3010-01	NS	FRAME			1
21	4030-3016-01		ACTUATOR			1
22	4030-3012-01		TORSION SPRING			1
23	4030-3020-01	NS	SHAFT			2
24	4030-3011-01		LEVER			1
25	4348-3047-01	NS	SHAFT			1

INDEX	PART NO.		PART NAME		REC	QTY
26	1067-2501-01		PIN			2
27	4030-3023-03	NS	GUIDE PLATE			1
28	1065-3086-01		BUSHING			1
29	4030-3030-01		TORSION SPRING			1
30	4030-3036-01		GUIDE			2
31	4030-3003-01		SHAFT			1
32	4425-3016-01		GEAR			1
33	4030-3034-01		CLUTCH			2
34	4030-3005-01		ROLLER	TAKE-UP	RP	2
35	4030-3008-01		GEAR			1
36	4425-3013-01		GEAR			1
37	4030-3002-02	NS	HOLDER			1
38	4030-3078-01		LEVER			1
39	4030-3025-02	NS	BRACKET			1
40	4030-0151-01		ROLLER ASSY	SEPARATOR	RP	1
41	4030-3037-01	NS	REINFORCE PLATE			1
42	4030-3077-01		GUIDE			1
43	4030-3013-01	NS	HOLDER			1
44	4030-3039-01		SHAFT			1
45	4030-3014-01	NS	BRACKET			1
46	4030-3017-02		PRESSURE SPRING			1
47	4348-3044-03	NS	FRAME			1
48	4348-6812-02		WIRE HARNESS ASSY			1
49	4348-3049-01	NS	BRACKET			1
50	4348-3073-01		PLATE SPRING			1

INDEX	PART NO.	PART NAME	REC	QTY	SFIX

5 LOWER PAPER TAKE-UP SECTION PF-210

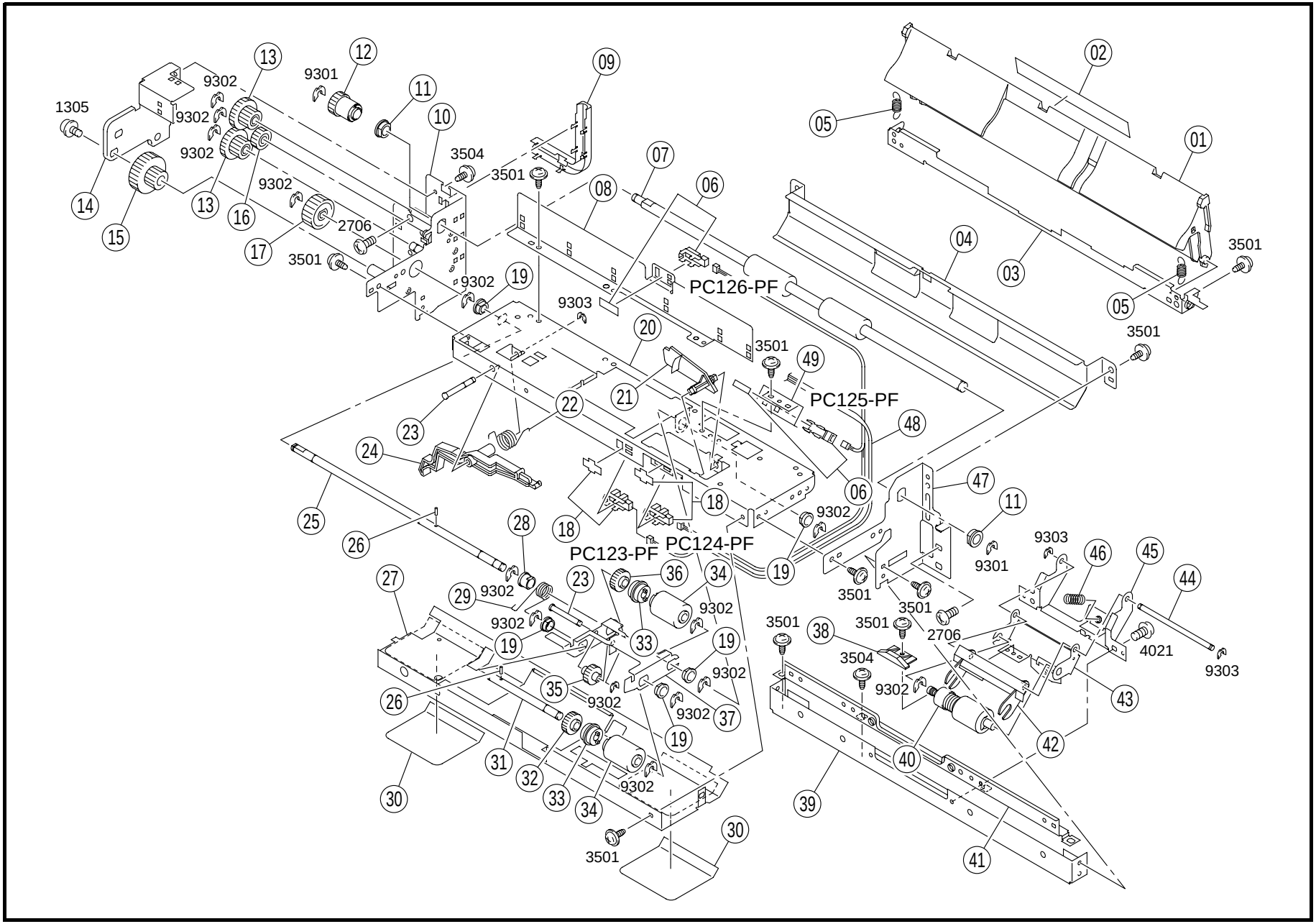

INDEX	PART NO.		PART NAME		REC	QTY
01	4030-3124-03		GUIDE			1
02	4030-3105-01		GUIDE			1
03	4030-3129-03	NS	BRACKET			1
04	4348-3042-01		GUIDE PLATE			1
05	4030-3125-01		TENSION SPRING			2
06	4349-0902-01		SOLID STATE SWITCH	(PC125.126-PF)		2
07	4348-3011-03		ROLLER	TRANSPORT	RP	1
08	4348-3046-01	NS	BRACKET			1
09	4348-3070-02		COVER			1
10	4348-0203-02	NS	FRAME ASSY			1
11	4131-3532-02		BUSHING			2
12	4348-3028-01		GEAR			1
13	4348-3031-01		GEAR			2
14	4348-3069-01	NS	BRACKET			1
15	4348-3048-01		GEAR			1
16	4348-3032-01		GEAR			1
17	4348-3029-01		GEAR			1
18	4131-0902-01		PHOTO INTERRUPTER	(PC123.124-PF)		1
19	4131-3003-01		BUSHING			5
20	4030-3010-01	NS	FRAME			1
21	4030-3016-01		ACTUATOR			1
22	4030-3012-01		TORSION SPRING			1
23	4030-3020-01	NS	SHAFT			2
24	4030-3011-01		LEVER			1
25	4348-3047-01	NS	SHAFT			1
26	1067-2501-01		PIN			2
27	4030-3023-03	NS	GUIDE PLATE			1
28	1065-3086-01		BUSHING			1
29	4030-3030-01		TORSION SPRING			1
30	4030-3036-01		GUIDE			2
31	4030-3003-01		SHAFT			1
32	4425-3016-01		GEAR			1
33	4030-3034-01		CLUTCH			2
34	4030-3005-01		ROLLER	TAKE-UP	RP	2
35	4030-3008-01		GEAR			1
36	4425-3013-01		GEAR			1
37	4030-3002-02	NS	HOLDER			1
38	4030-3078-01		LEVER			1
39	4030-3025-02	NS	BRACKET			1
40	4030-0151-01		ROLLER ASSY	SEPARATOR	RP	1
41	4030-3037-01	NS	REINFORCE PLATE			1
42	4030-3077-01		GUIDE			1
43	4030-3013-01	NS	HOLDER			1
44	4030-3039-01		SHAFT			1
45	4030-3014-01	NS	BRACKET			1
46	4030-3017-02		PRESSURE SPRING			1
47	4348-3044-03	NS	FRAME			1
48	4348-6815-02		WIRE HARNESS ASSY			1
49	4348-3049-01	NS	BRACKET			1

INDEX	PART NO.	PART NAME	REC	QTY	SFIX

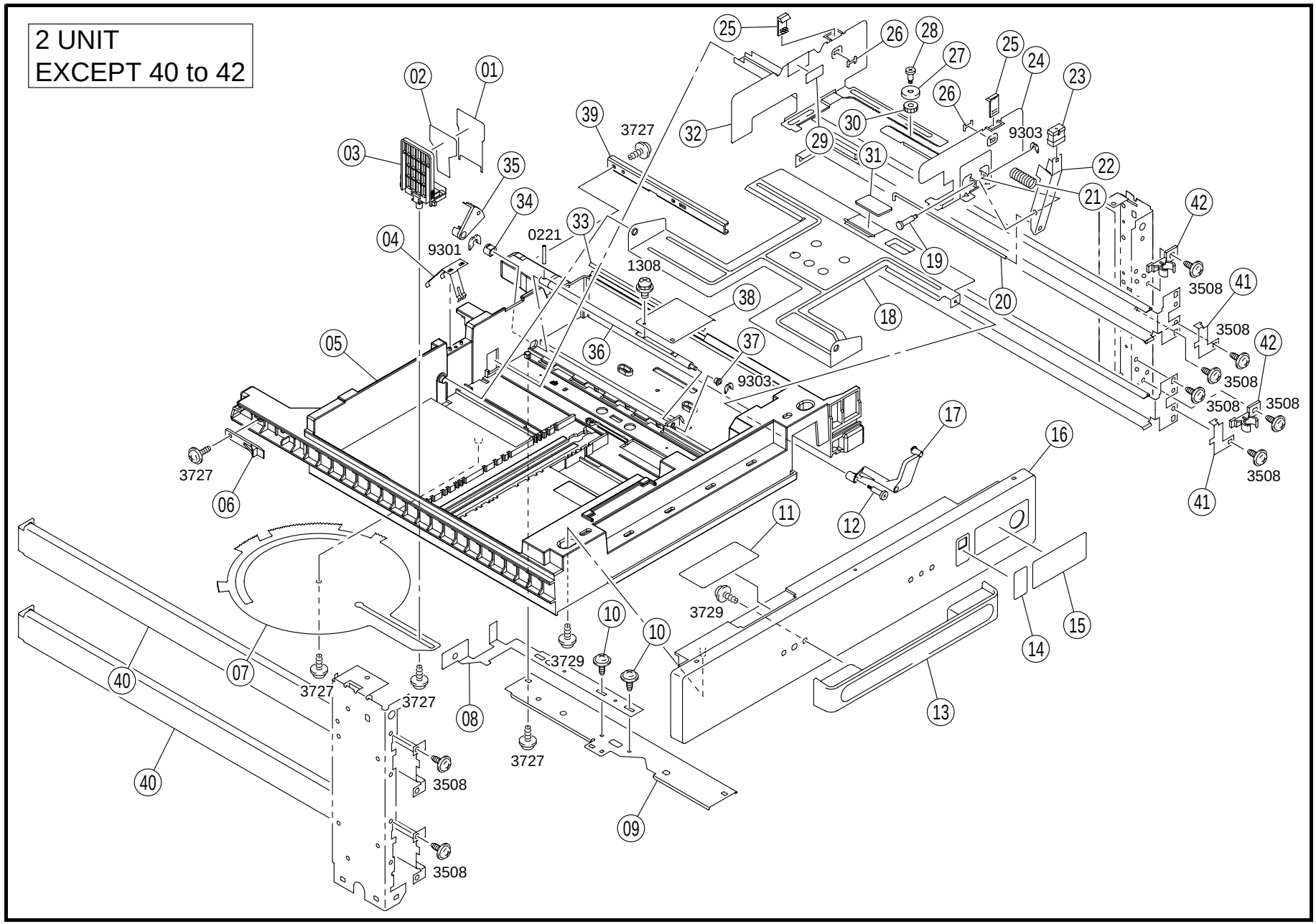
2 UNIT
EXCEPT 40 to 42
01
02
03
04
05
06
07
08
09
10
11
12
13
14
15
16
17
19
20
21
22
23
24
25
26
27
28
29
30
31
32
33
34
35
36
37
38
39
40
42
0221
1308
3727
3729
3508
9301
9303

INDEX	PART NO.		PART NAME	REC	QTY
01	4030-3228-01		GUIDE		1
02	4030-3227-01		GUIDE		1
03	4030-3213-01		REGULATING PLATE		1
04	4030-3223-02		EARTH GROUND		1
05	4030-3201-03	NS	CASSETTE		1
06	4498-3469-01		STOPPER		1
07	4002-3108-01	NS	LEVER		1
08	4030-3216-01	NS	BRACKET		1
09	4030-3218-01		BRACKET		1
10	4498-3834-01		SCREW		2
11	4030-7304-02		LABEL		1
12	4030-3224-01		SHOULDER SCREW		1
13	4030-3225-01		HANDLE		1
14	4030-7301-02		LABEL		1
15	4348-7303-02		LABEL		1
16	4348-3202-02		COVER		1
17	4030-3221-01		LEVER		1
18	4030-3203-01	NS	LIFTING PLATE		1
19	4498-3826-01		SHAFT		1
20	4030-3217-01	NS	SHAFT		1
21	4498-3825-01		PRESSURE SPRING		1
22	4128-3823-01		LEVER		1
23	4498-3804-01		KNOB		1
24	4030-3211-02	NS	REGULATING PLATE		1
25	4658-3048-01		GUIDE		2
26	4658-3049-01		STOPPER		2
27	4030-3215-01		GUIDE		1
28	4030-3214-01		SHOULDER SCREW		1
29	4002-7306-01		LABEL		1
30	4658-3012-01		GEAR		1
31	4030-3226-01		FRICTION SHEET		1
32	4030-3212-01	NS	REGULATING PLATE		1
33	4030-3222-01		GUIDE		1
34	1274-3603-01		BUSHING		1
35	4030-3207-01		ACTUATOR		1
36	4030-3205-01	NS	SHAFT		1
37	0992-3014-01		BUSHING		1
38	4030-3206-01	NS	LEVER		1
39	4030-3229-02	NS	REINFORCE PLATE		1
40	4348-2041-02	NS	BRACKET		2
41	4348-2038-02	NS	BRACKET		2
42	4348-2037-01		HOLDER		2

INDEX	PART NO.	PART NAME	REC	QTY	SFIX

⑴ 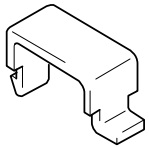	⑹ 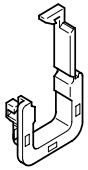						
⑵ 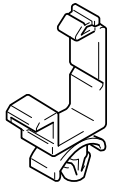							
⑶ 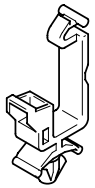							
⑷ 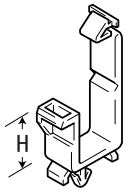							
⑸ 							

INDEX	PART NO.	PART NAME	REC	QTY	INDEX	PART NO.	PART NAME	REC	QTY
01	1065-5872-01	CORD CLAMP		19					
02	9384-1000-51	WIRING SADDLE		6					
03	9384-1100-91	WIRING SADDLE		8					
04	9384-1921-11	WIRING SADDLE 9.2H		9					
05	9384-2010-21	EDGE COVER 8.5H		14					
06	9384-2910-31	EDGE COVER		3					

INDEX	PART NO.	PART NAME	REC	QTY	SFIX

8 SCREWS AND WASHERS PF-210

INDEX	PART NO.	PART NAME	ILLUST
0221 0224	9754-3025-08 9754-3018-08	SPRING ROLL PIN	
0502 0510	9752-3012-50 9752-3014-50	PIN	
1111	9642-0306-13	SCREW	
1277	9644-2606-13	SCREW	
1305 1308 1318 1353	9646-0306-13 9646-0308-13 9646-0408-13 9646-0330-13	SCREW	
1623 2706 2719	9654-0408-01 9654-0408-14 9654-0308-14	SCREW	
3501 3504 3508	9735-0306-13 9735-0308-13 9735-0408-13	TAPPING SCREW	
3704 3726 3727 3729	9739-0308-13 9739-0408-14 9739-0308-14 9739-0410-14	TAPPING SCREW	
3925	9742-0206-13	TAPPING SCREW	
4020 4021 4025	9743-0408-14 9743-0308-14 9743-0306-14	TAPPING SCREW	
9107	9721-0400-01	RETAINING RING	
9301 9302 9303	1066-1151-01 4425-3001-01 4425-3002-01	RETAINING RING	

PART NO.	FIG.	INDEX	QTY
0992-3014-01	06	37	1
1038-5302-01	01	13	1
1065-3086-01	04	28	1
1065-3086-01	05	28	1
1065-5872-01	07	01	19
1067-2501-01	04	26	2
1067-2501-01	05	26	2
1149-3454-01	03	07	1
1164-3020-03	02	13	2
1274-3603-01	06	34	1
4002-2581-01	01	12	9
4002-2581-01	02	19	6
4002-3108-01	06	07	1
4002-3110-01	02	06	2
4002-3131-01	02	07	2
4002-7306-01	06	29	1
4011-0111-01	02	12	2
4011-3012-01	02	11	2
4030-0151-01	04	40	1
4030-0151-01	05	40	1
4030-3002-02	04	37	1
4030-3002-02	05	37	1
4030-3003-01	04	31	1
4030-3003-01	05	31	1
4030-3005-01	04	34	2
4030-3005-01	05	34	2
4030-3008-01	04	35	1
4030-3008-01	05	35	1
4030-3010-01	04	20	1
4030-3010-01	05	20	1
4030-3011-01	04	24	1
4030-3011-01	05	24	1
4030-3012-01	04	22	1
4030-3012-01	05	22	1
4030-3013-01	04	43	1
4030-3013-01	05	43	1
4030-3014-01	04	45	1
4030-3014-01	05	45	1
4030-3016-01	04	21	1
4030-3016-01	05	21	1
4030-3017-02	04	46	1
4030-3017-02	05	46	1
4030-3020-01	04	23	2
4030-3020-01	05	23	2
4030-3023-03	04	27	1
4030-3023-03	05	27	1
4030-3025-02	04	39	1
4030-3025-02	05	39	1
4030-3030-01	04	29	1
4030-3030-01	05	29	1
4030-3034-01	04	33	2
4030-3034-01	05	33	2
4030-3036-01	04	30	2
4030-3036-01	05	30	2
4030-3037-01	04	41	1
4030-3037-01	05	41	1
4030-3039-01	04	44	1
4030-3039-01	05	44	1
4030-3046-03	02	34	2
4030-3047-02	02	08	2
4030-3048-02	02	32	2
4030-3049-01	02	33	2
4030-3077-01	04	42	1
4030-3077-01	05	42	1
4030-3078-01	04	38	1
4030-3078-01	05	38	1
4030-3081-01	02	30	4
4030-3083-01	02	29	2
4030-3105-01	04	02	1
4030-3105-01	05	02	1
4030-3122-01	03	04	8
4030-3123-01	03	03	4
4030-3124-03	04	01	1
4030-3124-03	05	01	1
4030-3125-01	04	05	2
4030-3125-01	05	05	2
4030-3129-03	04	03	1
4030-3129-03	05	03	1
4030-3201-03	06	05	1
4030-3203-01	06	18	1
4030-3205-01	06	36	1
4030-3206-01	06	38	1
4030-3207-01	06	35	1
4030-3208-02	02	31	2
4030-3211-02	06	24	1
4030-3212-01	06	32	1
4030-3213-01	06	03	1
4030-3214-01	06	28	1
4030-3215-01	06	27	1
4030-3216-01	06	08	1
4030-3217-01	06	20	1
4030-3218-01	06	09	1
4030-3221-01	06	17	1
4030-3222-01	06	33	1
4030-3223-02	06	04	1
4030-3224-01	02	28	4
4030-3224-01	06	12	1
4030-3225-01	06	13	1
4030-3226-01	06	31	1
4030-3227-01	06	02	1
4030-3228-01	06	01	1
4030-3229-02	06	39	1
4030-7301-02	06	14	1
4030-7304-02	06	11	1
4030-7310-01	01	09	1
4030-7312-01	01	09	1
4128-3823-01	06	22	1
4131-0902-01	02	01	2
4131-0902-01	02	02	2
4131-0902-01	02	03	2
4131-0902-01	02	04	2
4131-0902-01	04	18	3
4131-0902-01	05	18	1
4131-3003-01	04	19	5
4131-3003-01	05	19	5
4131-3532-02	04	11	2
4131-3532-02	05	11	2
4348-0102-03	02	15	1
4348-0121-01	01	18	1
4348-0201-02	03	11	1
4348-0202-01	01	03	2
4348-0203-02	04	10	1
4348-0203-02	05	10	1
4348-1001-02	01	11	1
4348-1002-01	01	21	1
4348-1003-02	01	01	1
4348-1004-03	01	22	1
4348-1005-02	01	17	1
4348-2006-01	02	20	1
4348-2010-01	02	21	4
4348-2014-02	01	15	1
4348-2016-01	01	14	1
4348-2017-01	02	26	1
4348-2021-01	01	19	1
4348-2022-01	01	06	2
4348-2023-01	02	22	4
4348-2024-01	02	25	2
4348-2025-02	01	24	5
4348-2026-01	02	27	1
4348-2027-01	01	02	1
4348-2028-01	02	24	1
4348-2029-01	01	16	1
4348-2030-01	02	23	1
4348-2036-01	02	14	1
4348-2037-01	06	42	2
4348-2038-02	06	41	2
4348-2040-01	01	05	2
4348-2041-02	06	40	2
4348-2043-01	01	23	4
4348-3011-03	04	07	1
4348-3011-03	05	07	1
4348-3028-01	04	12	1
4348-3028-01	05	12	1
4348-3029-01	04	17	1
4348-3029-01	05	17	1
4348-3030-01	01	04	4
4348-3031-01	04	13	2
4348-3031-01	05	13	2
4348-3032-01	04	16	1
4348-3032-01	05	16	1
4348-3042-01	04	04	1
4348-3042-01	05	04	1
4348-3044-03	04	47	1
4348-3044-03	05	47	1
4348-3046-01	04	08	1
4348-3046-01	05	08	1
4348-3047-01	04	25	1
4348-3047-01	05	25	1
4348-3048-01	04	15	1
4348-3048-01	05	15	1
4348-3049-01	04	49	1
4348-3049-01	05	49	1
4348-3050-02	03	13	1
4348-3051-01	03	08	1
4348-3052-01	03	14	1
4348-3053-01	03	02	1
4348-3054-01	03	01	1
4348-3058-01	03	15	1
4348-3059-01	01	20	1
4348-3060-01	03	10	1
4348-3061-01	03	12	2
4348-3063-02	03	09	1
4348-3064-01	03	05	1
4348-3069-01	04	14	1
4348-3069-01	05	14	1
4348-3070-02	04	09	1
4348-3070-02	05	09	1
4348-3071-01	03	16	2
4348-3072-01	03	06	1
4348-3073-01	04	50	1
4348-3202-02	06	16	1
4348-6801-02	02	10	1
4348-6810-01	02	09	1
4348-6811-02	02	17	1
4348-6812-02	04	48	1
4348-6813-01	02	16	1
4348-6814-02	02	18	1
4348-6815-02	05	48	1
4348-7303-02	06	15	1
4349-0902-01	04	06	2
4349-0902-01	05	06	2
4425-3013-01	04	36	1
4425-3013-01	05	36	1
4425-3016-01	04	32	1
4425-3016-01	05	32	1
4479-7305-01	01	10	1
4498-3469-01	06	06	1
4498-3804-01	06	23	1
4498-3825-01	06	21	1
4498-3826-01	06	19	1
4498-3834-01	06	10	2
4658-3012-01	06	30	1
4658-3042-01	01	25	4
4658-3048-01	06	25	2
4658-3049-01	06	26	2
4658-3140-02	01	26	4
9312-1200-31	02	05	2
9314-1201-01	01	07	2
9314-1201-01	01	08	2
9384-1000-51	07	02	6
9384-1100-91	07	03	8
9384-1921-11	07	04	9
9384-2010-21	07	05	14
9384-2910-31	07	06	3



Copyright

2003 MINOLTA Co., Ltd.

Printed in Japan

Use of this catalog should be strictly supervised to avoid disclosure of confidential information.

MINOLTA Co., Ltd.

4348-7995-21 03061500