MINOLTA

Parts Catalog

The essentials of imaging

PK-6

4512

PREFACE

1. The part numbers listed in Parts Catalog are those which were assigned to the parts making up the machine at the time machine was originally introduced onto the market.

2. Parts whose INDEX numbers are shown white against a black background in the illustration are those to be used in only certain market areas. These part numbers are given in the lower half part of the list section. Check the SFIX No. listed in SFIX CHART on page II to find which part number is applicable to your own area.

3. Parts whose INDEX numbers are shown black against a white background in the illustration are those to be used in all market areas. These parts are listed on the upper half part of the list section.

4. If "NS" follows a part number given in the list section, it indicates that we do not keep a stock of the part. The part is not required for ordinary service jobs, either.

5. If "RP" is shown in the REC column of the list section, it indicates that the part is functionally important.

6. In the exploded views in this Parts Catalog the parts (Screws & Washes, etc...) which are indicated with a "four-digit" numbers are listed in numerical order in the section "SCREWS AND WASHERS". Please check these "four-digit" numbers with the part numbers ("ten-digit" numbers) which should be used for ordering the part.

7. All part numbers consist of "ten-digit" which should all be quoted when ordering a part. The price of parts can be obtained by referring to the "Parts Price List" which is separately issued.

8. All infomation contained in this Parts Catalog is subject to change.

SFIX CHART

SFIX No.	COUNTRY	-	-	PAPER SIZE	SFIX No.	COUNTRY	-	-	PAPER SIZE
611	JAPAN	-	2 HOLES	METRIC	614	EUROPE	-	4 HOLES	METRIC
612	USA/CANADA	-	2/3 HOLES	INCH	617	SWEDEN	-	4 HOLES	METRIC

CONTENTS

1. PUNCH UNIT ••••••

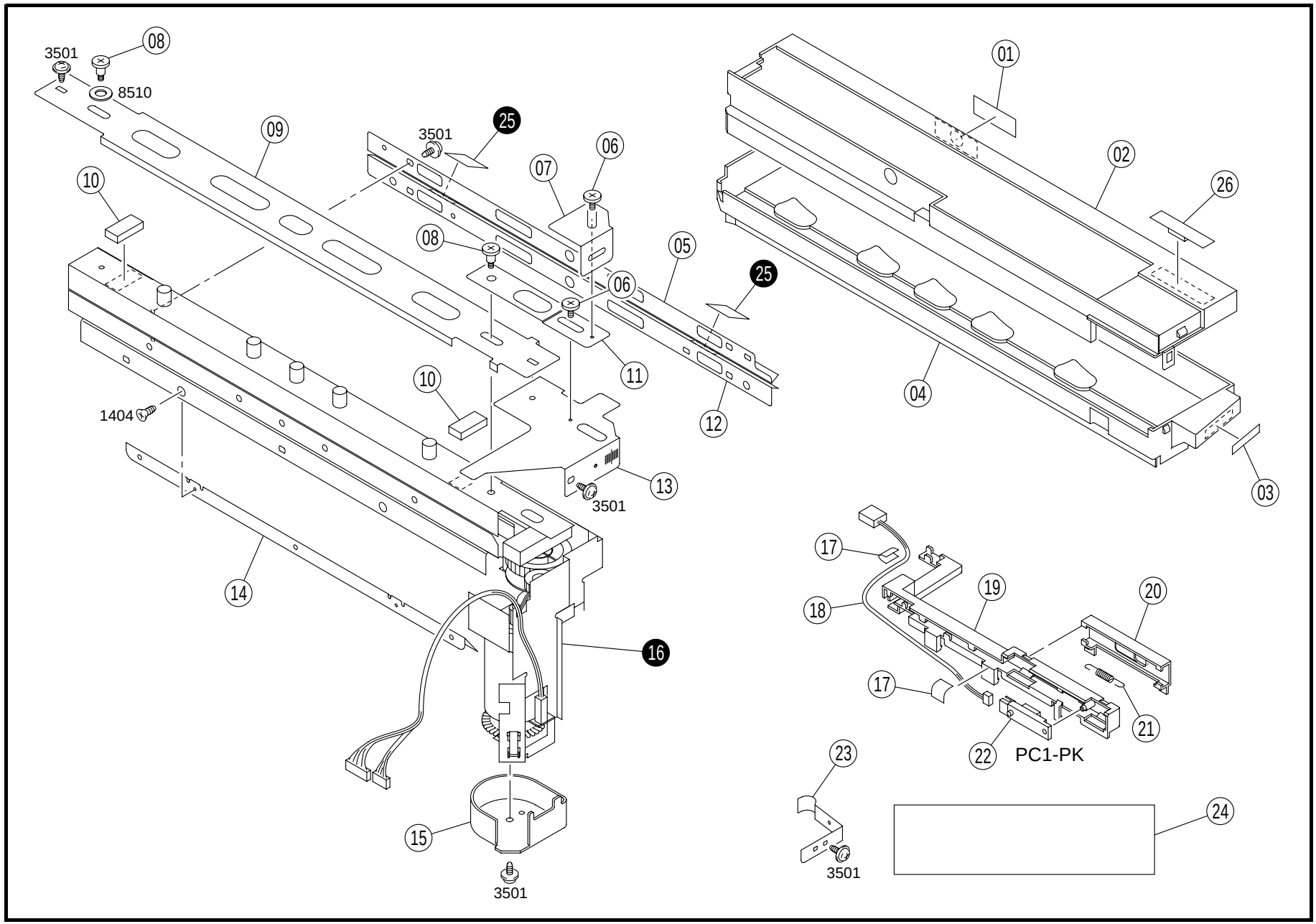
3501
08
8510
09
25
3501
06
07
10
08
05
25
06
11
10
12
1404
13
3501
14
16
15
3501
01
02
26
04
03
17
19
20
18
17
21
22
PC1-PK
23
24
3501

INDEX	PART NO.		PART NAME	REC	QTY
01	4512-2533-01		COVER		1
02	4512-2509-02		BOTTLE		1
03	4512-7301-01		LABEL		1
04	4512-2505-02		BOTTLE		1
05	4512-2515-01	NS	GUIDE		1
06	4512-2519-01		SHOULDER SCREW		2
07	4512-2514-01	NS	STOP PLATE		1
08	4512-2511-01		SHOULDER SCREW		2
09	4512-2513-02	NS	PLATE SPRING		1
10	4512-2525-01		CUSHION		2
11	4512-2517-01	NS	ARM		1
12	4512-2529-01	NS	GUIDE		1
13	4512-2516-01	NS	BRACKET		1
14	4512-2528-02	NS	GUIDE		1
15	4512-2524-01		COVER		1
17	4512-2531-01		COVER		2
18	4512-6801-01	NS	WIRE HARNESS ASSY		1
19	4512-2506-01		BRACKET		1

INDEX	PART NO.		PART NAME	REC	QTY
20	4512-2507-01		DETECTING PLATE		1
21	4512-2508-01		TENSION SPRING		1
22	9335-1910-51		SOLID STATE SWITCH (PC1-PK)		1
23	4512-2518-02		PLATE SPRING		1
24	4512-7302-01		LABEL		1
26	4512-2535-01		CUSHION		1

INDEX	PART NO.		PART NAME	REC	QTY	SFIX
16	4512-2501-01		PUNCH UNIT 2/3 HOLES		1	612
16	4512-2502-01		PUNCH UNIT 2 HOLES		1	611
16	4512-2503-02		PUNCH UNIT 4 HOLES		1	614
16	4512-2504-01		PUNCH UNIT 4 HOLES SWEDEN		1	617
25	4512-2534-01		GUIDE		2	612

2 SCREWS AND WASHERS PK-6

INDEX	PART NO.	PART NAME	ILLUST
1404	9648-0306-13	SCREW	
3501	9735-0306-13	TAPPING SCREW	
8510	9716-0600-01	WASHER	

INDEX	PART NO.	PART NAME	ILLUST

INDEX	PART NO.	PART NAME	ILLUST



Copyright

2003 MINOLTA Co., Ltd.

Printed in Japan

Use of this catalog should be strictly supervised to avoid disclosure of confidential information.

MINOLTA Co., Ltd.

4512-7995-21 03071500