MINOLTA

Parts Catalog

The essentials of imaging

SB-1

4526-611

PREFACE

1. The part numbers listed in Parts Catalog are those which were assigned to the parts making up the machine at the time machine was originally introduced onto the market.

2. Parts whose INDEX numbers are shown white against a black background in the illustration are those to be used in only certain market areas. These part numbers are given in the lower half part of the list section. Check the SFIX No. listed in SFIX CHART on page II to find which part number is applicable to your own area.

3. Parts whose INDEX numbers are shown black against a white background in the illustration are those to be used in all market areas. These parts are listed on the upper half part of the list section.

4. If "NS" follows a part number given in the list section, it indicates that we do not keep a stock of the part. The part is not required for ordinary service jobs, either.

5. If "RP" is shown in the REC column of the list section, it indicates that the part is functionally important.

6. In the exploded views in this Parts Catalog the parts (Screws & Washes, etc...) which are indicated with a "four-digit" numbers are listed in numerical order in the section "SCREWS AND WASHERS". Please check these "four-digit" numbers with the part numbers ("ten-digit" numbers) which should be used for ordering the part.

7. All part numbers consist of "ten-digit" which should all be quoted when ordering a part. The price of parts can be obtained by referring to the "Parts Price List" which is separately issued.

8. All infomation contained in this Parts Catalog is subject to change.

CONTENTS

1. SWITCHBACK UNIT ••••••

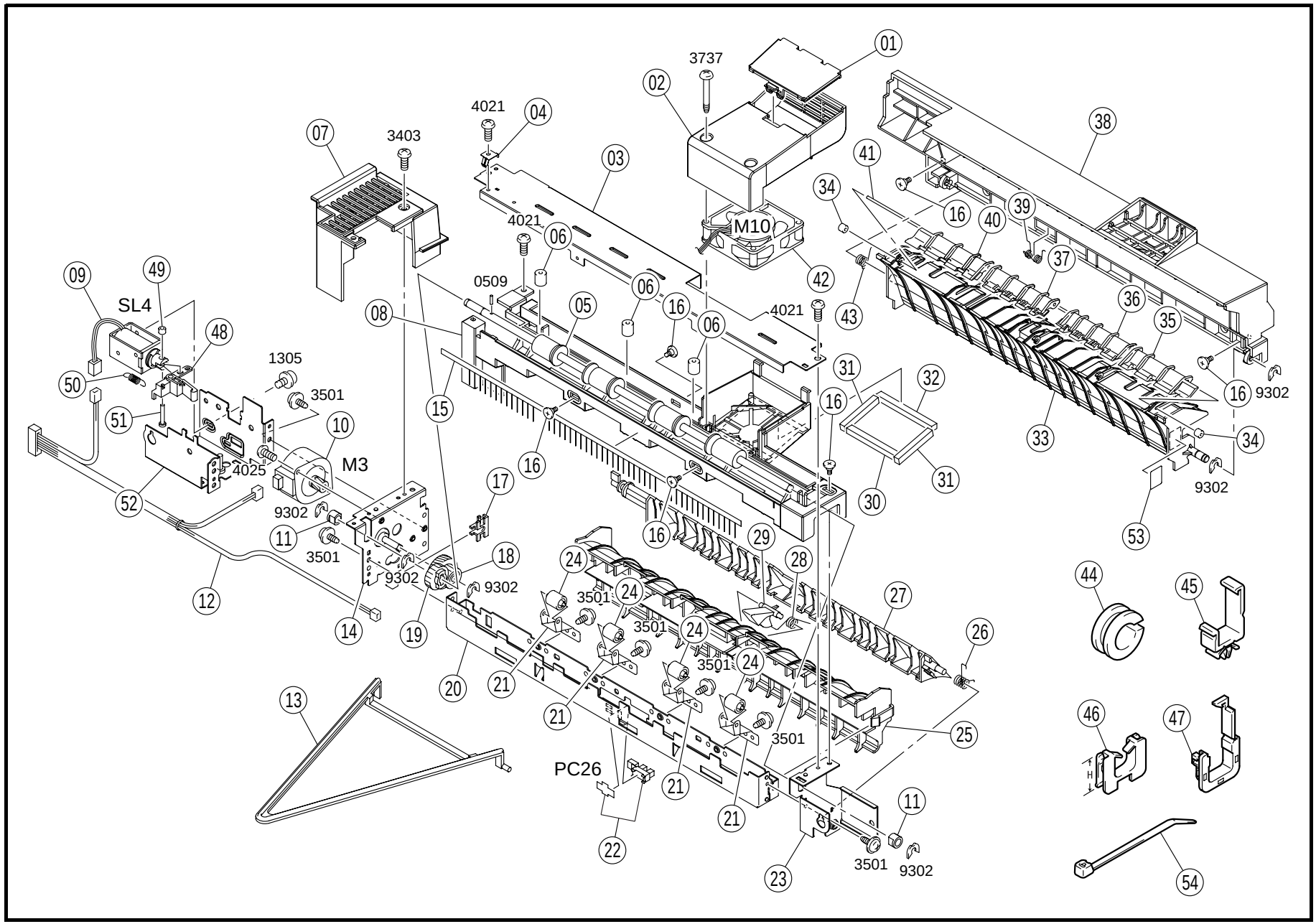
01
02
3737
03
4021
04
07
3403
38
41
34
16
40
39
37
36
35
16
9302
33
34
9302
53
4021
06
0509
M10
42
43
08
05
06
16
06
4021
09
49
SL4
48
50
1305
3501
51
10
M3
4025
52
15
31
32
16
31
30
16
16
17
9302
11
3501
9302
18
9302
12
14
19
20
21
29
28
24
3501
24
3501
24
3501
24
27
26
25
3501
21
21
21
21
PC26
22
23
11
3501
9302
13
44
45
46
47
54

INDEX	PART NO.	PART NAME	REC	QTY
01	4030-3836-01	DUCT		1
02	4030-3835-01	DUCT		1
03	4030-3802-01	FRAME		1
04	4030-3834-01	EARTH GROUND		1
05	4030-3815-01	ROLLER		1
06	4498-3388-01	COLLAR		3
07	4030-3820-01	COVER		1
08	4030-3803-02	COVER		1
09	9321-2200-31	SOLENOID SWITCHBACK (SL4)		1
10	9314-1200-91	MOTOR SWITCHBACK (M3)		1
11	1139-3169-01	BUSHING		2
12	4030-6824-01	WIRE HARNESS ASSY		1
13	4641-4504-02	GUIDE		1
14	4030-0206-01	BRACKET ASSY		1
15	4030-3833-01	NEUTRALIZING BRUSH		1
16	4011-5852-02	SHOULDER SCREW		6
17	4030-3823-01	BUSHING		1
18	4030-3821-01	GEAR		1
19	4030-3826-01	GEAR		1
20	4030-3801-02 NS	FRAME		1
21	4030-3817-01	PLATE SPRING		4
22	4131-0902-01	PHOTO INTERRUPTER SWITCHBAC (PC26)		1
23	4030-3805-02	GUIDE		1
24	4426-4411-02	ROLL		4
25	4030-3830-01	FRAME		1
26	4030-3808-01	TORSION SPRING		1
27	4030-3807-03	GUIDE		1

INDEX	PART NO.	PART NAME	REC	QTY
28	4030-3819-01	TORSION SPRING		1
29	4030-3818-02	ACTUATOR		1
30	4030-3839-01	SEAL		1
31	4030-3838-02	SEAL		2
32	4030-3837-01	SEAL		1
33	4030-3806-02	GUIDE		1
34	1134-3041-01	COLLAR		2
35	4030-3814-01	GUIDE		1
36	4030-3813-01	GUIDE		1
37	4030-3812-01	GUIDE		1
38	4030-3804-02	DOOR		1
39	4030-3825-02	TORSION SPRING		1
40	4030-3811-01	GUIDE		1
41	4030-3829-01	SHAFT		1
42	9313-1100-51	FAN MOTOR FUSING (M10)		1
43	4030-3824-01	TORSION SPRING		1
44	1031-4403-01	RING		1
45	9384-1310-91	WIRING SADDLE 18.5H		3
46	9384-2010-21	EDGE COVER 8.5H		3
47	9384-2910-31	EDGE COVER		1
48	4030-3809-01	LEVER		1
49	1200-2105-02	COLLAR		1
50	4030-3810-01	TENSION SPRING		1
51	4002-3779-01	PIN		1
52	4030-0207-02	BRACKET ASSY		1
53	4030-7342-01	LABEL		1
54	9384-1311-11	CABLE TIE 104L		2

INDEX	PART NO.	PART NAME	REC	QTY	SFIX

2 SCREWS AND WASHERS SB-1

INDEX	PART NO.	PART NAME	ILLUST
0509	9752-2012-50	PIN	
1305	9646-0306-13	SCREW	
3403	9733-0308-13	TAPPING SCREW	
3501	9735-0306-13	TAPPING SCREW	
3737	9739-0335-14	TAPPING SCREW	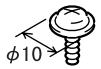
4021 4025	9743-0308-14 9743-0306-14	TAPPING SCREW	
9302	4425-3001-01	RETAINING RING	

INDEX	PART NO.	PART NAME	ILLUST

INDEX	PART NO.	PART NAME	ILLUST

PART NO.	FIG.	INDEX	QTY		PART NO.	FIG.	INDEX	QTY		PART NO.	FIG.	INDEX	QTY		PART NO.	FIG.	INDEX	QTY	
1031-4403-01	01	44	1																
1134-3041-01	01	34	2																
1139-3169-01	01	11	2																
1200-2105-02	01	49	1																
4002-3779-01	01	51	1																
4011-5852-02	01	16	6																
4030-0206-01	01	14	1																
4030-0207-02	01	52	1																
4030-3801-02	01	20	1																
4030-3802-01	01	03	1																
4030-3803-02	01	08	1																
4030-3804-02	01	38	1																
4030-3805-02	01	23	1																
4030-3806-02	01	33	1																
4030-3807-03	01	27	1																
4030-3808-01	01	26	1																
4030-3809-01	01	48	1																
4030-3810-01	01	50	1																
4030-3811-01	01	40	1																
4030-3812-01	01	37	1																
4030-3813-01	01	36	1																
4030-3814-01	01	35	1																
4030-3815-01	01	05	1																
4030-3817-01	01	21	4																
4030-3818-02	01	29	1																
4030-3819-01	01	28	1																
4030-3820-01	01	07	1																
4030-3821-01	01	18	1																
4030-3823-01	01	17	1																
4030-3824-01	01	43	1																
4030-3825-02	01	39	1																
4030-3826-01	01	19	1																
4030-3829-01	01	41	1																
4030-3830-01	01	25	1																
4030-3833-01	01	15	1																
4030-3834-01	01	04	1																
4030-3835-01	01	02	1																
4030-3836-01	01	01	1																
4030-3837-01	01	32	1																
4030-3838-02	01	31	2																
4030-3839-01	01	30	1																
4030-6824-01	01	12	1																
4030-7342-01	01	53	1																
4131-0902-01	01	22	1																
4426-4411-02	01	24	4																
4498-3388-01	01	06	3																
4641-4504-02	01	13	1																
9313-1100-51	01	42	1																
9314-1200-91	01	10	1																
9321-2200-31	01	09	1																
9384-1310-91	01	45	3																
9384-1311-11	01	54	2																
9384-2010-21	01	46	3																
9384-2910-31	01	47	1																



Copyright

2003 MINOLTA Co., Ltd.

Printed in Japan

Use of this catalog should be strictly supervised to avoid disclosure of confidential information.

MINOLTA Co., Ltd.

4526-7995-21 03061500