# The office attack



1st Issue
13.06.2003

## Product Basic

| | | | |
|---|---|---|---|
| **MODEL DEVELOPMENT CODE** | NDL0 | NDL1 | NDL2 |
| **PROPOSED MODEL NAME** | Di3510 / f | Di3010 | Di2510 / f |
| **SUCCESSOR MODEL FOR** | Di351 | N/A | Di251 |
| **ESTIMATED SALES START** | 07/03 | 07/03 | 07/03 |
| **DATAQUEST SEGMENT** | III | II | II |
| **ALSO AVAILABLE AS** | Develop | Develop | Develop |
| **TYPE** | Desktop/Console depending on Configuration, Stationary Platen | | |
| **MAX. MONTHLY COPY VOLUME** | 48 k | 38 k | 28 k |
| **AVERAGE MONTHLY COPY VOLUME** | 11 k | 8.1 k | 5.6 k |
| **MACHINE LIFE** | 1,100 k or 5 years | 930 k or 5 years | 760 k or 5 years |
| **MCBF Body (Mean Copies Between Failure)** | 81.5 k | 70 k | 58 k |
| **MCBF System (Mean Copies Between Failure)** | 68.0 k | 58.5 k | 48.5 k |
| **MCBJ (Mean Copies Between Jam)** | Simplex: 1/6,000<br>Duplex: 1/3,000 | Simplex: 1/4,000<br>Duplex: 1/2,000 | |
| **MCBV (Mean Copies between Visit)** | 35 k | 30 k | 25 k |
| **MTTR (Mean Time To Repair)** | 30 min. | 30 min. | 30 min. |
| **SAFETY & ENVIRONMENT** | www.minoltaeurope.com/env/data/ | | |
| English Data Sheets | 39818_Di3510e.pdf | 39603_Di3010e.pdf | 39111_Di2510e.pdf |
| German Data Sheets | 39818_Di3510d.pdf | 39603_Di3010d.pdf | 39111_Di2510d.pdf |

**Product Basic**
Product Configuration
System Specifications
Copier Specifications
Printer Specifications
Scanner Specifications
Fax Specifications
Consumables
Article Numbers
Installation
Maintenance
Spare Parts
Recommended Media
Appendix

# Product Configuration

**SYSTEM DIMENSIONS**

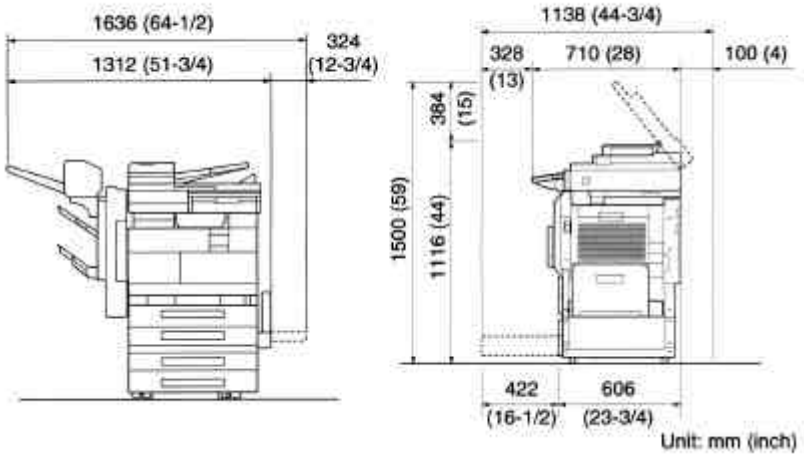


Product Basic
Product Configuration
System Specifications
Copier Specifications
Printer Specifications
Scanner Specifications
Fax Specifications
Consumables
Article Numbers
Installation
Maintenance
Spare Parts
Recommended Media
Appendix

## SYSTEM CONFIGURATION

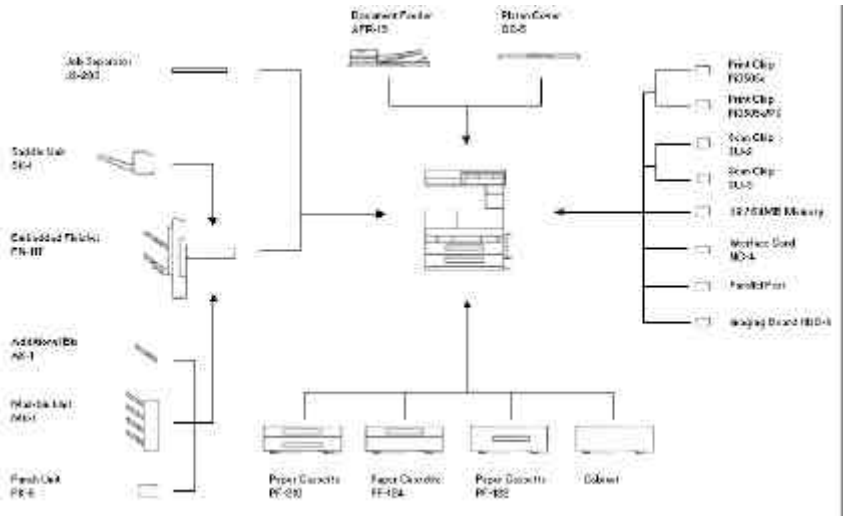

Product Basic
Product Configuration
System Specifications
Copier Specifications
Printer Specifications
Scanner Specifications
Fax Specifications
Consumables
Article Numbers
Installation
Maintenance
Spare Parts
Recommended Media
Appendix

# System Specifications

| ORIGINAL FEEDER (AFR-19) | Option |
|---|---|
| Article Number | 4344 - 612 |
| Original Size | A5 – A3 |
| Original Weight | Simplex: 35 ~ 128 g/m²<br>Duplex: 50 ~ 128g/m² |
| Tray Capacity | 80 originals (80 g/m²) |
| Feeding Type | Face up, upper sheet |
| Feeding Speed | 35 opm/A4 size |
| Dimensions (WxDxH) mm | 582 x 558 x 145 |
| Weight (kg) | 9,4 |

| PAPER CASSETTES | |
|---|---|
| Capacity | 2 x 500 sheets universal (80 g/m²) |
| Paper Format | A5 – A3 |
| Paper Weight | 60 – 90 g/m² |
| Max. Paper Capacity | 1150 sheets standard, max. 3650 sheets |

| PAPER FEED CABINET PF-124 | Option |
|---|---|
| Compatibility | No |
| Article Number | 4348 – 512 |
| Capacity | 500 sheets universal (80 g/m²) |
| Paper Format | A5 – A3 |
| Paper Weight | 60 – 90 g/m² |
| Dimensions (WxDxH) (mm) | 570 x 577 x 263 |
| Weight (kg) | 22 |
| Remark | |

Product Basic
Product Configuration
System Specifications
Copier Specifications
Printer Specifications
Scanner Specifications
Fax Specifications
Consumables
Article Numbers
Installation
Maintenance
Spare Parts
Recommended Media
Appendix

| TWO WAY PAPER FEED CABINET PF-210 | Option |
|---|---|
| Compatibility | No |
| Article Number | 4348 – 412 |
| Capacity | 2 x 500 sheets universal (80 g/m²) |
| Paper Format | A5 – A3 |
| Paper Weight | 60 – 90 g/m² |
| Dimensions (WxDxH) (mm) | 570 x 548 x 263 |
| Weight (kg) | 27 |
| Remark | |

| LARGE CAPACITY CABINET PF-122 | Option |
|---|---|
| Compatibility | No |
| Article Number | 4348 – 712 |
| Capacity | 2,500 sheets (80 g/m²) |
| Paper Format | A4 crosswise |
| Paper Weight | 60 – 90 g/m² |
| Dimensions (WxDxH) (mm) | 570 x 564 x 263 |
| Weight (kg) | 26 |
| Remark | |

| DUPLEX UNIT AD-16 | |
|---|---|
| Compatibility | No |
| Article Number | Standard |
| Capacity | one sheet duplex |
| Paper Format | A5 lengthwise – A3 |
| Paper Weight | 60 – 90 g/m² |

Product Basic
Product Configuration
System Specifications
Copier Specifications
Printer Specifications
Scanner Specifications
Fax Specifications
Consumables
Article Numbers
Installation
Maintenance
Spare Parts
Recommended Media
Appendix

| | |
|---|---|
| **BYPASS** | |
| Capacity | 150 sheets (80 g/m²) |
| Paper Format | A6 – A3 (min. 90 x 140 mm, max. 297 x 432 mm) with automatic size detection |
| Paper Weight | Up to 210 g/m² |
| Copy Media | Envelopes (refer to recommended media), OHP, thick paper |
| **EMBEDDED FINISHER (FN-117)** | **Option** |
| Compatible | No |
| Article Number | 4349 – 612 |
| Finishing Modes | Non-sort, sort, group, staple |
| Tray Capacity | Upper tray: 200 sheets (A4 / 80 g/m²)<br>Lower tray: 1000 sheets (A4 / 80 g/m²) |
| Stapling Modes | Corner stapling, two position stapling |
| Stapling Capacity | 50 sheets |
| Stapling Format | Corner(far side, near side), Parallel binding(far side, near side, 2 points) |
| Dimensions (WxDxH) (mm) | 319 x 558 x 573 |
| Weight (kg) | 21.4 |
| Remark | 1 staple cartridge MS – 5D is included |
| **ADDITIONAL BIN KIT (AK-1)** | **Option** |
| Compatible | No |
| Article Number | 4625 – 202 |
| Bin Capacity | 200 sheets |
| Remark | For more details in regard to the capacity refer to the chapter “Appendix” |
| **MAIL BIN KIT (MK-1)** | **Option** |
| Compatible | No |
| Article Number | 4510 – 612 |
| Number of Bins | 4 |
| Bin Capacity | 125 sheets each |

Product Basic
Product Configuration
System Specifications
Copier Specifications
Printer Specifications
Scanner Specifications
Fax Specifications
Consumables
Article Numbers
Installation
Maintenance
Spare Parts
Recommended Media
Appendix

| | |
|---|---|
| **MAIL BIN KIT (MK-1) cont.** | |
| Dimensions (WxDxH) (mm) | 624 x 503 x 390 |
| Weight (kg) | 8 |
| Remarks | Either Mail Bin Kit or Saddle Kit can be installed to FN-117 |
| **SADDLE KIT (SK-1)** | **Option** |
| Compatible | No |
| Article Number | 4511 – 612 |
| Folding | Crease fold |
| Paper Size | A4 lengthwise / A3 |
| Paper Weight | 60 – 90 g/m² |
| Tray Capacity | 200 sheets or 20 sets |
| Stapling Modes | Centre parallel 2 points |
| Stapling Capacity | 2 – 15 sheets |
| Dimensions (WxDxH) (mm) | Inside the transport section: 48 x 399 x 146<br>Staple Unit and Output Tray: 576 x 281 x 478 |
| Weight (kg) | 9.3 (inner and outer part together) |
| Remark | 1 staple cartridge MS – 2C is included in the kit<br>Either Saddle Kit or Mail Bin Kit can be installed to FN-117 |
| **PUNCH KIT (PK-6)** | **Option** |
| Compatible | No |
| Article Number | 4512 – 614 (European Version)<br>4512 – 617 (Swedish Version) |
| Number of Holes | 4 |
| Paper Size | A4 – A3 |
| Paper Weight | 60 – 160 g/m² |
| Dimensions (WxDxH) (mm) | 114 x 461 x 136 |
| Weight (kg) | 1.9 |
| Remark | |

Product Basic
Product Configuration
System Specifications
Copier Specifications
Printer Specifications
Scanner Specifications
Fax Specifications
Consumables
Article Numbers
Installation
Maintenance
Spare Parts
Recommended Media
Appendix

| JOB SEPARATOR (JS-203) | Option |
|---|---|
| Compatible | No |
| Article Number | 4347 –612 |
| Number of Trays | 2 |
| Tray Capacity | Tray 1: 250 sheets (60 – 90 g/m²), 20 sh. (90 – 210 g/m²)<br>Tray 2: 100 sheets (60 – 90 g/m²) |
| Paper Size | Tray 1: A6 lengthwise – A3<br>Tray 2: A5 – A3 |
| Paper Weight | Tray 1: 60 – 210 g/m²<br>Tray 2: 60 – 90 g/m² |
| Dimensions (WxDxH) (mm) | 450 x 443 x 75 |
| Weight (kg) | 1.7 |

| ORIGINAL COVER KIT (OC-6) | Option |
|---|---|
| Compatible | No |
| Article Number | 4599 – 221 |

| KEY COUNTER KIT 4 | Option |
|---|---|
| Compatible | |
| Article Number | 4599 – 211 |
| Remark | |

| COPY DESK (CD-4M) | Option |
|---|---|
| Compatible | No |
| Article Number | 9960 – 6400 - 00 |

| TX MARKER STAMP UNIT 2 | Option |
|---|---|
| Compatible | No |
| Article Number | 4614 – 501 |

| SPARE TX MARKER STAMP 2 | Option |
|---|---|
| Compatible | No |
| Article Number | 4614 – 511 |

Product Basic
Product Configuration
System Specifications
Copier Specifications
Printer Specifications
Scanner Specifications
Fax Specifications
Consumables
Article Numbers
Installation
Maintenance
Spare Parts
Recommended Media
Appendix
Recommended Media
Appendix

| PRINT KEY Pi3505e (PCL) | Option |
|---|---|
| Compatible | No |
| Article Number | 4513 – 614 |
| Type | Embedded, part of the machine control board |
| Remark | NIC card is required to install Pi3505e. If the parallel port should be installed the NIC card is not necessary. |

| PRINT KEY Pi3505e / PS (PCL / PS) | Option |
|---|---|
| Compatible | No |
| Article Number | 4513 – 714 |
| Type | Embedded, part of the machine control board |
| Remark | NIC card is required to install Pi3505e / PS. If the parallel port should be installed the NIC card is not necessary. |

| SCAN KEY FOR NETWORK SCAN (SU-2) | Option |
|---|---|
| Compatible | No |
| Article Number | 4514 – 614 |
| Memory | 128 MB on board |
| Remark | NIC card is required to install SU-2 |

| SCAN KEY FOR INTERNET FAX & NETWORK SCAN (SU-3) | Option |
|---|---|
| Compatible | No |
| Article Number | 4388 – 616 |
| Memory | 128 MB on board |
| Remark | NIC card is required to install SU-3 |

| DATA DRIVE (HDD-6) | Option |
|---|---|
| Compatible | No |
| Article Number | 4599 – 172 |
| Memory Capacity | 16 GB |
| Function | For details refer to the chapter “Appendix” |
| Remark | NIC card is required to install the HDD-6 |

Product Basic
Product Configuration
System Specifications
Copier Specifications
Printer Specifications
Scanner Specifications
Fax Specifications
Consumables
Article Numbers
Installation
Maintenance
Spare Parts
Recommended Media
Recommended Media
Appendix

| | |
|---|---|
| **32 MB MEMORY (M32-4)** | **Option** |
| Compatible | No |
| Article Number | 4388 – 604 |
| Storing Capacity | 170 pages A4 with 6 % image |
| Remark | Customized memory. It is shared for both, copier and printer. |
| **64 MB MEMORY (M64-2)** | **Option** |
| Compatible | No |
| Article Number | 4388 - 605 |
| Storing Capacity | 340 pages A4 with 6 % image |
| Remark | Customized memory. It is shared for both, copier and printer. |
| **INTERFACE CARD (NC - 4)** | **Option** |
| Compatible | No |
| Article Number | 4388 - 614 |
| Remark | It is the interface card for HDD, 10/100 Base-T and USB. USB is for printing, not for scanning. |
| **PARALLEL INTERFACE KIT** | **Option** |
| Compatible | No |
| Article Number | 4599 - 182 |
| Remark | It is for printing, not for scanning. Interface card(NC-4) and Parallel Interface kit can work independently. |

Product Basic
Product Configuration
System Specifications
Copier Specifications
Printer Specifications
Scanner Specifications
Fax Specifications
Consumables
Article Numbers
Maintenance
Spare Parts
Recommended Media
Appendix
Recommended Media
Appendix

## Copier Specifications

| | Di3510 / f | Di3010 | Di2510 / f |
|---|---|---|---|
| **WARM-UP TIME** | Less than 17 sec. | | |
| **FIRST COPY** | 4.8 sec. | 5.3 sec. | 5.3 sec. |
| **COPY SPEED** | 35 cpm<br>A4 crosswise | 30 cpm<br>A4 crosswise | 25 cpm<br>A4 crosswise |
| | ?? cpm<br>A4 lengthwise | ?? cpm<br>A4 lengthwise | ?? cpm<br>A4 lengthwise |
| | ?? cpm B4 | ?? cpm B4 | ?? cpm B4 |
| | 20 cpm A3 | 17 cpm A3 | 14 cpm A3 |
| **COPY RESOLUTION** | 600 x 600 dpi | | |
| **COPY TANDEM FUNCTIONALITY** | No | | |
| **COPY RAM** | 64 MB (about 170 A4 images) | | |
| **ZOOM** | 25 % - 400 % adjustable in 0.1 % steps | | |
| **MULTI COPY** | 1 - 999 | 1 - 99 | 1 - 99 |
| **EXPOSURE CONTROL** | Auto/Manual, Character, Photo, Photo/Character | | |
| **VOID AREA** | | | |
| Single Sided Copies | 4 mm all edges | | |
| Double Sided Copies | ??? | | |
| **POWER REQUIREMENT** | 220 – 240 V : 10 A 50 / 60 Hz | | |
| **POWER CONSUMPTION** | Less than 1360 kW | | |
| **COPIER DIMENSIONS (W x D x H) mm** | 677 x 710 x 718 | | |
| **COPIER WEIGHT (kg)** | 74 kg | | |
| **FEATURE LIST** | | | |
| 2in1/4in1/8in1 | Yes/Yes/Yes (8 in 1 : Double Sided 4 in 1) | | |
| AMS/APS | Yes / Yes | | |
| 2 in 1 Original Separation | Yes | | |
| N in 1 | Yes, up to 4 in 1 | | |


Product Basic
Product Configuration
System Specifications
**Copier Specifications**
Printer Specifications
Scanner Specifications
Fax Specifications
Consumables
Article Numbers
Installation
Maintenance
Spare Parts
Recommended Media
Appendix

| | Di3510 / f | Di3010 | Di2510 / f |
|---|---|---|---|
| **FEATURE LIST cont.** | | | |
| Book Copy | Yes | | |
| Booklet Creation | Yes, but combination with Cover Mode not possible | | |
| Page Insertion | Yes | | |
| Continuous Number Stamping | No | | |
| Cover Mode | Yes | | |
| Date Stamp | Yes | | |
| Page Stamp | Yes | | |
| Distribution Numbering | No | | |
| Watermark | Yes, also w/o HDD | | |
| Department Control | No | | |
| Edge / Frame Erase | Yes / Yes | | |
| Image Insertion | No | | |
| Image Repeat | Yes | | |
| Image Shift | No | | |
| Image Rotation | Yes, criss/cross possible | | |
| Job / Memory Recall | Yes | | |
| Non-Image Area Erase | No | | |
| OHP Interleaving | Yes | | |
| Overlay | Yes, with HDD | | |
| Page Insertion | Yes | | |
| Positive-Negative-Mode | Yes | | |
| Stamp | No | | |
| X/Y Independent Zoom | Yes | | |

| | Di3510 / f | Di3010 | Di2510 / f |
|---|---|---|---|
| **FEATURE LIST cont.** | | | |
| Program Memory | Yes (10) | | |
| Proof Copy | No | | |
| Separate Scanning | Yes | | |

# Printer Specifications

| | |
|---|---|
| **CPU** | RM5231A (PMC Sierra) 66 MHz – Common with Copier |
| **PRINT SPEED** | |
| | 25 / 30 / 35 ppm A4 (crosswise) |
| | 14 / 17 / 20 ppm/A3 |
| **TANDEM PRINT FUNCTIONALITY** | No |
| **PRINT RESOLUTION** | 600 x 600dpi |
| **MAX PRINTABLE AREA** | 297mm x 420mm minus 5.2 mm on all edges (PCL) |
| **PDL** | PCL5e/PCL6<br>PostScript 3 emulation (with Pi3505e/PS) |
| **PRINT RAM** | PCL(Pi3505e) : 32MB , PCL/PS(Pi3505e/PS) : 128MB |
| **PRINT HDD** | 16 GB for common use, copy, print, scan |
| **FONTS** | PCL : Agfa Intellifont 35 outline fonts + True Type 10 fonts + 1bitmap) |
| | PS : Agfa Type 1 font (PS3 136 fonts) |
| **INTERFACE** | |
| Parallel | Yes, optional |
| USB | Yes (1.1), optional (NC-4) |
| 10/100BaseT | Yes, optional (NC-4) |
| **PROTOCOLS** | |
| Nibble/ECP | Yes/Yes |
| EtherTalk | Yes. |
| IPX/SPX | Yes with support of NDS(Novell Directly Service) |
| TCP/IP | Yes. |
| SNMP | Yes. |
| SMTP/POP3 | Yes. |
| HTTP | Yes. |

Product Basic
Product Configuration
System Specifications
Copier Specifications
**Printer Specifications**
Scanner Specifications
Fax Specifications
Consumables
Article Numbers
Installation
Maintenance
Spare Parts
Recommended Media
Appendix

| | |
|---|---|
| **PROTOCOLS** | |
| Netware | Yes. |
| NDPS | Yes. |
| Ipd | Yes. |
| IPP | Yes (v1.1) |
| Apple Talk | Yes (with Pi3505e/PS) |
| **PRINTER DRIVER** | (Minolta Standard GUI for PCL6 driver) |
| Windows 95 | No. (Windows98 driver can be used for Windows 95) |
| Windows 98 | Yes, for both PCL6, PCL5e(Mini), PS(Customized Mini). |
| Windows Me | Yes, for both PCL6, PCL5e(Mini), PS(Customized Mini). |
| Windows NT | Yes, for both PCL6, PCL5e(Mini), PS(Customized Mini). |
| Windows 2000 | Yes, for both PCL6, PCL5e(Mini), PS(Customized Mini). |
| Windows XP | Yes, for both PCL6, PCL5e(Mini), PS(Customized Mini). |
| Windows 2003 | Yes, after the official release of Win2003 (until the release of the official printer driver, printer driver for WinXP can be used). |
| Mac OS System 9.2/10.2 | Yes, ppd for PS () |
| Linux | Use ppd file for Windows with 3rd party SW |
| **UTILITIES** | (PageScope CD is bundled with NC-4) |
| PageScope Netcare | Yes in PageScope CD, v4.05. The Device Plug-in file to support Pi3505e, Pi3505ePS on PageScope Net Care will be on the download site of http://www.pagescope.minolta.com and MITIM. |
| PageScope Light | Yes (embedded in engine) |
| PageScope Network Setup | Yes in PageScope CD, v2.0 |
| PageScope NDPS Gateway | Yes in PageScope CD, v2.01 |
| PageScope EMS Plug-ins | Yes in PageScope CD. v2.0 for CA Unicenter, v2.1 for Tivoli Netview and v2.2 by Metaconsole(for HP Openview and Microsoft Management Console) |
| PDF Direct Print / PS Font Download utility | Yes, for both Windows NT4.0/2000/XP and Mac OS. Pi3505ePS and HDD-6 are necessary. As it's just a *.exe file and doesn't have any menu/message, it's independent from languages. |

Product Basic
Product Configuration
System Specifications
Copier Specifications
**Printer Specifications**
Scanner Specifications
Fax Specifications
Consumables
Article Numbers
Installation
Maintenance
Spare Parts
Recommended Media
Appendix

| FEATURE LIST | |
|---|---|
| Booklet Creation | Yes ( For PS, HDD-6 is necessary). |
| Chapter Insertion | No |
| Continuous Number Stamping | Yes (only PCL6) |
| Cover Mode | Yes (Cover page, Back page) |
| Date Stamp | No |
| Distribution Numbering | Yes (PCL and PS) |
| Edge / Frame Erase | No |
| Image Insertion | No |
| Image Repeat | Yes. “Store to HDD” or “Reprint”(Store on Memory) as Job Life on the printer driver |
| Image Shift | No |
| Image Rotation | No |
| Job Accounting | Yes (PCL and PS) |
| Non-Image Area Erase | No |
| OHP Interleaving | Yes |
| Overlay | PCL5e : By downloading Form to Printer Memory , PCL6 : Watermark on driver, PS : By downloading Form to Memory/HDD. |
| Page Insertion | No |
| Page Stamp | No |
| Test Print (Proof Print) | Yes by selecting “Store to HDD” or “Reprint” as Job Life |
| Stamp | No |
| Watermark | Yes |
| N-up/Fit to Paper/Scaling | Yes(up to 16-up) / Yes / Yes. |
| Lock Job | Yes (PCL and PS) |
| Job life (Store to Memory / HDD) | Yes (PCL and PS) |
| Two-way communication (automatic configuration in driver) | No |

| FEATURE LIST cont. | |
|---|---|
| RIP Once Print Many | Yes |
| All Raster / Download as bitmap | Yes. |
| Output bin | Either the upper tray or bottom tray can be specified on OP as dedicated tray for printing. With Mail bin option, Mail bin 1-4 can be specified on printer driver. |
| WHQL | Yes for both PCL6 and PS printer drivers. For Win2000 and XP (and Win2003 after the official release of it). |
| **FINISHING** | |
| Sorting | Yes |
| Stapling | Yes |
| Punching | Yes |
| Folding | Yes |
| Cover Insertion | No |
| Trimming | No |

# Scanner Specifications (SU-2 / SU-3)

| | |
|---|---|
| **SCAN FUNCTIONS** | |
| Twain Scan | Yes ( Network Twain driver : Janurary/'04 ) |
| Scan to FTP | Yes |
| Scan to HDD (Scan to Mailbox) | Yes (with HDD-6) |
| Scan to E-mail | Yes |
| Scan to URL | Yes (for Scan to FTP and Scan to HDD) |
| Scan to iFAX | Yes with SU-3 (email, LAN-FAX via SMTP). |
| Scan to IP Scanner (Direct send to PC) | Yes with SU-3 from "Extra Scan" button. |
| **SCAN BASICS** | |
| Scan Speed (with EDH) | 200 dpi : Double of Engine speed (Di2510 : 50 spm, Di3010 : 60 spm, Di3510 : 70 spm / A4 ),<br>Other resolutions : Same with Engine speed. |
| Paper Size | A5 – A3 |
| Colour Scanning Capability | No |
| Separate Scan Counter | Yes (TTL Scan counter = FAX TX + Scan-to-xx) |
| Scan Format | SU-2 : TIFF-S, PDF<br>SU-3 : TIFF-FX (FAX extension : Multi-page) , PDF |
| Coding (Compression) | e-mail/FTP/HDD : MH, MMR,<br>iFAX : MH, MMR, MR, JBIG |
| One Touch Key | 540 (common among Scan-to-xx, FAX and iFAX : 36 Index x 15 addresses) |
| Group send (Broadcast) | Index (max. 36) can be used. |
| **Network TWAIN** | (It will be released at Janurary/'04) |
| Client OS | Win98/Me/NT4.0/2000/XP |
| **Scan to e-mail** | |
| Protocol | SMTP |
| Resolution | 200x200 (default), 400x400, 600x600 dpi. |
| Max. destinations | 540 (common between Scan-to-xx and FAX : 36 Index x 15 addresses) |
| Image division | Yes ( Off / On by Page or Size ) |

Product Basic
Product Configuration
System Specifications
Copier Specifications
Printer Specifications
**Scanner Specifications**
Fax Specifications
Consumables
Article Numbers
Installation
Maintenance
Spare Parts
Recommended Media
Appendix

| | |
|---|---|
| **Scan to FTP** | |
| Protocol | FTP |
| Resolution | 200x200(default), 400x400, 600x600 dpi. |
| Max. destinations | Scan to FTP (Server) : 5 servers x 5 directories.<br>Scan to FTP (PC) : 540 (common between Scan-to-xx and FAX : 36 Index x 15 addresses) |
| **Scan to HDD (Mailbox)** | (HDD-6 is necessary ) |
| Resolution | 200x200 (default), 400x400, 600x600 dpi. |
| Max. Mailbox (Scan to HDD) | 540 (common between Scan-to-xx and FAX : 36 Index x 15 addresses : Mailbox name can be registered only from PageScope Light) |
| Password protection | Yes (except Public mailbox). |
| Notes | Stored scanned image can be retrieved from both PageScope Light and Twain driver(Twain driver is available from beg/ January). |
| **Scan to IP Scanner (Direct Scan)** | (Only with SU-3 : SU-3 includes IP Scanner utility) |
| Resolution | 400x400, 600x600 only. |
| Max. destinations | 6 client PCs from “Extra Scan” button on Operation Panel (need to install IP Scanner utility) |
| **Scan to iFAX (e-mail / LAN-FAX)** | (Only with SU-3 : SU-3 includes Network FAX utility) |
| Protocol | e-mail : SMTP, POP3<br>LAN-FAX : TCP/IP |
| Paper Size | E-mail : Only A4, B4, A3 (depends on the ability of receiver) ; LAN-FAX : Same with FAX |
| Resolution | 200 x 100, 200 x 200, 400 x 400, 600 x 600 dpi ( e-mail : depends on the ability of receiver ) |
| **Enhanced features** | |
| LDAP | Yes, from November/'03 (new FW). |
| User Authentication for Scan-to-xx | Yes, from May/'04 (new FW). |
| **UTILITIES** | |
| PageScope Cabinet | Yes in PageScope CD, v2.0 (PageScope CD is bundled with NC-4) |
| IP Scanner | Yes with SU-3. This is SW utility for the feature of Direct Scan-to-PC) by using “Extra Scan” button on Operation Panel. |
| Network FAX | Yes with SU-3. It is easy-to-use PC FAX utility. |
| PageScope Address Book Utility | Yes in PageScope CD, v2.0 (PageScope CD is bundled with NC-4) |

Product Basic
Product Configuration
System Specifications
Copier Specifications
Printer Specifications
Scanner Specifications
Fax Specifications
Consumables
Article Numbers
Installation
Maintenance
Spare Parts
Recommended Media
Appendix

# Fax Specifications

| | |
|---|---|
| **GENERAL DATA** | |
| Min Transmission Time (seconds) | ?? (ITU No. 1) |
| Max. Modem Speed / Compatibility | 33,6 kbps / ECM, G3 |
| Coding / Error Correction (ECM) | MH, MR, MMR, JBIG / ECM |
| Document Memory, Byte (max pages) | ?? (ITU No 1) |
| Memory Battery Buffered | 12 hours |
| Dual Access (2ch) | Yes |
| Dual Line | No |
| Remote Installation/DiagNostic | No |
| Display/ Error Indicator | Graphic Touch Panel(LCD) / LED on ADF (Green or Red) |
| | |
| **DIALING** | |
| Max. Numbers Stored | 540 |
| Max. Phone Digits | Not confirmed yet |
| Program Keys | 540 is Common among Program Keys, One-Touch and Speed Dial Numbers. |
| Group Setting (max.) | Program keys (30) can be used as alternative. |
| Tone/Pulse Select | Not confirmed yet |
| PSTN-access by No/Earth Key/Flash | Not confirmed yet |
| Subaddressing | Not confirmed yet |
| Auto Redial/Last Number Redial | Yes / No |
| Electronic Telephone Book Function | Yes |
| Monitor Speaker | No |

Product Basic
Product Configuration
System Specifications
Copier Specifications
Printer Specifications
Scanner Specifications
**Fax Specifications**
Consumables
Article Numbers
Installation
Maintenance
Spare Parts
Recommended Media
Appendix

| TRANSMISSION/INPUT | |
|---|---|
| Transmission Resolution | STD, F, SF, UF ( to compatible machines) ??? |
| Effective Scanning Width | A3/B4/A4 : 294/254/208 (mm) |
| Max. Size FBS (W x L) | 297 x 1,000 mm (Simplex, EDH) |
| Halftones/I/T Separation | 256 steps (error diffusion), |
| Number of Timers | Not confirmed yet |
| Storable TX Jobs | Not confirmed yet |
| ADF/Memory Transmission | Not confirmed yet |
| Book Scanner Transmission | Not confirmed yet |
| Header Line | Not confirmed yet |
| Stamp Function | Yes |
| Department Management | Not confirmed yet |
| Authorised Transmission (by PIN code) | Not confirmed yet |
| Closed Network/ Protected TX | Not confirmed yet |
| Quick Memory Transmission | Yes with EDH (one-sided original only) |
| Batch Transmission | Not confirmed yet |
| Priority Transmission | Yes. |
| 2-to-1 Transmission | Yes with ADF. |
| 2-Sided Transmission | Yes with ADF. |
| Mailbox Transmission Command | Not confirmed yet |
| Page Count/ Cover Page Function | / Yes (Cover page insertion) ??. |
| Max. Broadcasting Locations | 300 destinations (incl. 12 Full numbers) |
| Relay Broadcasting | Yes |
| Relay Broadcast Command | Yes |

Product Basic
Product Configuration
System Specifications
Copier Specifications
Printer Specifications
Scanner Specifications
**Fax Specifications**
Consumables
Article Numbers
Installation
Maintenance
Spare Parts
Recommended Media
Appendix

| RECEIVING/OUTPUT | |
|---|---|
| Receiving Resolution | STD, F, SF, UF (to compatible machines) ??? |
| Effective Print Width (fax mode) | A3/B4/A4 : 287/247/200 (mm) |
| Smoothing | Yes. |
| Auto/Manual Reception | Yes/Yes |
| Storable RX Jobs | More than 1400 pages(32MB) |
| Reduction in Fax Mode | Not confirmed yet |
| Paper source selection | Not confirmed yet |
| Receiving/Output Tray Selection | Yes (dedicated output tray can be specified on OP). |
| Memory Receiving | Not confirmed yet |
| Footer Print | Not confirmed yet |
| Closed Network RX/ Protected RX | Not confirmed yet |
| 2 to 1 Receiving | Not confirmed yet |
| Duplex Reception | Not confirmed yet |
| RX-Memory Print by Password | Not confirmed yet |
| Forward Function | Not confirmed yet |
| Mailbox Receiving (ITU-T) | Not confirmed yet |
| Max. Polling Locations | Not confirmed yet |
| Selective/Protected Polling | Yes / |
| Memory Polling (Database Polling) | Not confirmed yet |

Product Basic
Product Configuration
System Specifications
Copier Specifications
Printer Specifications
Scanner Specifications
Fax Specifications
Consumables
Article Numbers
Installation
Maintenance
Spare Parts
Recommended Media
Appendix

| REPORTS AND LISTS | |
|---|---|
| Telephone List | Yes |
| Key Setting List | Yes |
| Transmission Report | Yes. |
| Reception Result Report | Yes |
| Reservation Report | Not confirmed yet |
| Relay Broadcast Report | Yes |
| Error Report | Yes (Non TX Report) |
| Machine Status List | Not confirmed yet |
| Journal (max. 60 communications) | Not confirmed yet |
| Consumable Order Report | Not confirmed yet |
| Memory Data List/Print | Not confirmed yet |
| Power/Backup-RAM Error Report | Not confirmed yet |
| User/Department Management List | Not confirmed yet |
| **INTERFACE** | |
| Interface | Not confirmed yet |
| Max. Communication Speed | Not confirmed yet |
| Recommended Interface Cable | Not confirmed yet |
| Recommended PC-Fax Software | Not confirmed yet |
| Supported Functions f. PC-fax Software | Not confirmed yet |
| Other (Optional) Dedicated Software | Not confirmed yet |

Note: Specification may vary due to national PTT regulations

## Consumables

| | |
|---|---|
| **TONER** | |
| Compatibility | Di3010 / 3510 |
| Article-No. | 8937 - 749 |
| Name | MT Toner 303B |
| Concept | Cartridge system |
| Weight | 420 g |
| Yield | 13 k (6% coverage) |
| Units per carton | 2 cartridge |
| **TONER** | |
| Compatibility | Di2510 |
| Article-No. | 8937 - 755 |
| Name | MT Toner 205B |
| Concept | Cartridge system |
| Weight | 420 g |
| Yield | 13 k (6% coverage) |
| Units per carton | 2 cartridge |
| **STARTER** | |
| Compatibility | Di2510 / 3010 / 3510, Di152 / 183 |
| Article-No. | 8936 – 418 |
| Name | MT Starter 106 |
| Weight | 200 g |
| Yield | 80 k / 90 k / 100 k |
| Units per carton | 6 units per carton |

Product Basic
Product Configuration
System Specifications
Copier Specifications
Printer Specifications
Scanner Specifications
Fax Specifications
**Consumables**
Article Numbers
Installation
Maintenance
Spare Parts
Recommended Media
Appendix

| | |
|---|---|
| **PC-DRUM** | |
| Compatibility | Di2510 / 3010 / 3510 |
| Article-No. | 4515 - 613 |
| Name | Photoconductor 305 |
| Yield | 80 k / 90 k / 100 k |
| Units per carton | 1 |
| **STAPLE CARTRIDGE FOR FN-117** | |
| Compatibility | FN-8 / 105 / 107 / 109 / 113 |
| Article-No. | 4623 – 3610 - 01 |
| Name | MS – 5D (MAXX) |
| Quantity per Sales Unit | 3 x 5000 staples |
| **STAPLE CARTRIDGES FOR SK-1** | |
| Compatibility | No |
| Article-No. | 4599 – 1610 - 01 |
| Name | MS – 2C (MAXX) |
| Quantity per Sales Unit | 4 x 2000 staples |

Product Basic
Product Configuration
System Specifications
Copier Specifications
Printer Specifications
Scanner Specifications
Fax Specifications
**Consumables**
Article Numbers
Installation
Maintenance
Spare Parts
Recommended Media
Appendix

# Article Numbers

| | |
|---|---|
| **MACHINE** | |
| Di3510 | 4030 - 211 |
| Di3010 | 4031 - 211 |
| Di2510 | 4032 - 211 |
| Di3510f | 4384 - 211 |
| Di2510f | 4386 - 211 |
| **ACCESSORIES** | |
| Duplexing Document Feeder AFR-19 | 4344 - 612 |
| Embedded Finisher FN-117 | 4349 - 612 |
| Additional Bin Kit AK-1 | 4625 - 202 |
| Mail Bin Kit MK-1 | 4510 - 612 |
| Saddle Kit SK-1 | 4511 - 612 |
| Punch Kit PK-6 | 4512 – 614 (European Version) |
| Punch Kit PK-6 | 4512 – 617 (Swedish Version) |
| Job Separator JS-203 | 4347 - 612 |
| Original Cover Kit OC-6 | 4599 - 221 |
| Paper Feed Cabinet PF-124 | 4348 - 512 |
| Two Way Paper Feed Cabinet PF-210 | 4348 - 412 |
| Large Capacity Cabinet PF-122 | 4348 – 712 |
| Copy Desk CD-4M | 9960 – 6400 - 00 |
| Key Counter Kit 4 | 4599 – 211 |
| Print Key Pi3505e (PCL) | 4513 – 614 |
| Print Key Pi3505e/PS (PCL, PS) | 4513 – 714 |
| Scan Key for Network Scan SU-2 | 4514 – 614 |

Product Basic
Product Configuration
System Specifications
Copier Specifications
Printer Specifications
Scanner Specifications
Fax Specifications
Consumables
Article Numbers
Installation
Maintenance
Spare Parts
Recommended Media
Appendix

| | |
|---|---|
| **ACCESSORIES cont.** | |
| Scan Key for Internet Fax & Network Scan SU-3 | 4388 – 616 |
| Data Drive HDD-6 | 4599 - 172 |
| 32 MB Memory M32-4 | 4388 - 604 |
| 64 MB Memory M64-2 | 4388 - 605 |
| 128 MB Memory M128-3 | 4388 - 606 |
| Interface Card NC-4 | 4388 - 614 |
| Parallel Interface Kit (Centronics) | 4599 - 182 |
| **CONSUMABLES** | |
| Toner MT-205B for Di2510 / f | 8937 - 755 |
| Toner MT-303B for Di3010 / 3510 / f | 8937 - 749 |
| Starter 106 | 8936 - 418 |
| Drum 305 | 4515 - 613 |
| **STAPLES** | |
| Staples MS-5D for FN-117 | 4623 – 3610 - 01 |
| Staples MS-2C for SK-1 | 4599 – 1610 - 01 |

Product Basic
Product Configuration
System Specifications
Copier Specifications
Printer Specifications
Scanner Specifications
Fax Specifications
Consumables
Article Numbers
Installation
Maintenance
Spare Parts
Recommended Media
Appendix

| DOCUMENTATION | Language | Art. No. | | Remarks |
|---|---|---|---|---|
| Operator's Manual for Di2510/3010/3510 | GB | 9961 – 2510 - 00 | ✓ | |
| | D | 9961 –2510 - 01 | ✓ | |
| | F | 9961 – 2510 - 02 | ✓ | |
| | E | 9961 – 2510 - 03 | ✓ | |
| | I | 9961 – 2510 - 04 | ✓ | |
| | P | 9961 – 2510 - 05 | ✓ | |
| | NL | 9961 – 2510 - 06 | ✓ | |
| | DK | 9961 – 2510 - 07 | ✓ | |
| | S | 9961 – 2510 - 08 | ✓ | |
| | N | 9961 – 2510 - 09 | ✓ | |
| | FIN | 9961 – 2510 - 10 | ✓ | |
| | GR | 9961 – 2510 - 11 | ✓ | |
| | TR | 9961 – 2510 – 13 | ✓ | |
| | PL | 9961 – 2510 – 21 | ✓ | |
| | RUS | 9961 – 2510 – 23 | ✓ | |
| | RO | 9961 – 2510 – 22 | ✓ | |
| | H | 9961 – 2510 – 18 | ✓ | |
| | CZ | 9961 – 2510 – 15 | ✓ | |
| | SK | 9961 – 2510 - 24 | ✓ | |

Product Basic
Product Configuration
System Specifications
Copier Specifications
Printer Specifications
Scanner Specifications
Fax Specifications
Consumables
**Article Numbers**
Installation
Maintenance
Spare Parts
Recommended Media
Appendix

| DOCUMENTATION | Language | Art. No. | | Remarks |
|---|---|---|---|---|
| Face Sheets and Labels for Di2510/3010/3510 | GB | 9967 – 2510 - 00 | ✓ | |
| | D | 9967 – 2510 - 01 | ✓ | |
| | F | 9967 – 2510 - 02 | ✓ | |
| | E | 9967 – 2510 - 03 | ✓ | |
| | I | 9967 – 2510 - 04 | ✓ | |
| | P | 9967 – 2510 - 05 | ✓ | |
| | NL | 9967 – 2510 - 06 | ✓ | |
| | DK | 9967 – 2510 - 07 | ✓ | |
| | S | 9967 – 2510 - 08 | ✓ | |
| | N | 9967 – 2510 - 09 | ✓ | |
| | FIN | 9967 – 2510 - 10 | ✓ | |
| | GR | 9967 – 2510 - 11 | ✓ | |
| | TR | 9967 – 2510 – 13 | ✓ | |
| | PL | 9967 – 2510 – 21 | ✓ | |
| | RUS | 9967 – 2510 – 23 | ✓ | |
| | RO | 9967 – 2510 – 22 | ✓ | |
| | H | 9967 – 2510 – 18 | ✓ | |
| | CZ | 9967 – 2510 – 15 | ✓ | |
| | SK | 9967 – 2510 - 24 | ✓ | |

Product Basic
Product Configuration
System Specifications
Copier Specifications
Printer Specifications
Scanner Specifications
Fax Specifications
Consumables
**Article Numbers**
Installation
Maintenance
Spare Parts
Recommended Media
Appendix

## Installation

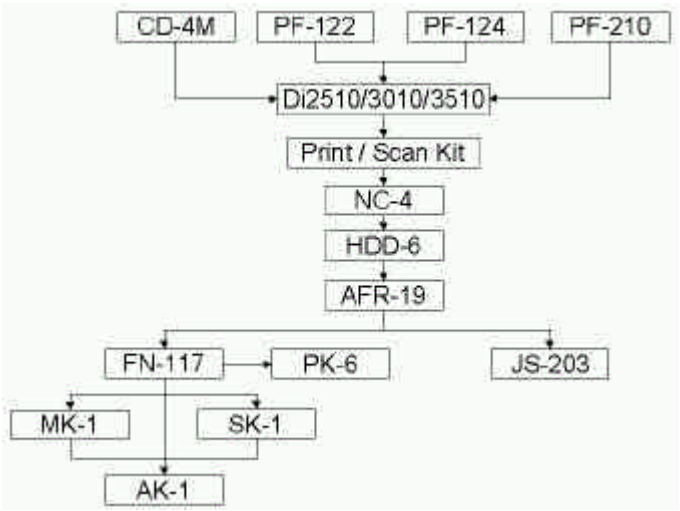


Product Basic
Product Configuration
System Specifications
Copier Specifications
Printer Specifications
Scanner Specifications
Fax Specifications
Consumables
Article Numbers
Installation
Maintenance
Spare Parts
Recommended Media
Appendix

# Maintenance

### Main unit / print controller

As we know from the past neither Di250/350 Nor Di251/351 had implemented flashrom technology. This time the firmware of the machine (incl. the controller firmware) is located on a CompactFlash (32MB) card. After removing the card from the slot, this compact flash can simply be updated using a PCMCIA adapter and a Notebook. Afterward the Compact Flash has to be put back to the firmware slot. In order to keep the time for updates as little as possible this slot will be easily accessible. Only one small cover needs to be removed.

### Finisher

In case if an update for the finisher or PWB-A (engine) is required, Minolta developed a flashrom update procedure via Notebook. A universal JIG (including cable to hinge connector) and a regular RS 232c cable is required in order to perform this action. Once the Notebook is connected with the JIG, a program allows to upload the required firmware either to the main unit or to the built in finisher FN-117.

### AFR-19

The third option that can be upgraded by using flashrom technology is the AFR-19. If an upgrade is required here, the service engineer simply has to insert a regular EEPROM with the latest firmware revision, and automatically the firmware upload procedure starts. The progress of this update will be indicated, by flashing of the condition lamp on top of the feeder itself. After the update is completed, the EEPROM can be removed from the socket.

Product Basic
Product Configuration
System Specifications
Copier Specifications
Printer Specifications
Scanner Specifications
Fax Specifications
Consumables
Article Numbers
Installation
Maintenance
Spare Parts
Recommended Media
Appendix

## Spare Parts

| Spare Parts | Art.nr. | Qty Unit | A | B | C | Desc. |
|---|---|---|---|---|---|---|
| PWB ASSY | 4030-0101-07 | 1 | 1 | 2 | 5 | PWB-A Di3510f |
| PWB ASSY | 4031-0101-07 | 1 | 1 | 2 | 5 | PWB-A Di3010f |
| PWB ASSY | 4031-0101-07 | 1 | 1 | 2 | 5 | PWB-A Di2510f |
| FILTER | 4011-2032-01 | 1 | 1 | 2 | 5 | PWB-A Di3510 |
| FILTER | 4011-2031-01 | 1 | 1 | 2 | 5 | PWB-A Di3010 |
| FILTER | 4011-2032-01 | 1 | 1 | 2 | 5 | PWB-A D2510 |
| ROLLER ASSY | 4030-0151-01 | 1 | 1 | 2 | 5 | UPR SEPARATOR |
| ROLLER ASSY | 4030-0151-01 | 1 | 1 | 2 | 5 | LOWR SEPARATOR |
| ROLLER | 4030-3005-01 | 2 | 2 | 4 | 10 | UPR PAPER PICK UP |
| ROLLER | 4030-3005-01 | 2 | 2 | 4 | 10 | LOWR PAPER PICK UP |
| ROLLER | 4131-3001-01 | 1 | 1 | 2 | 5 | MAN FEED PICK UP |
| PWB ASSY | 4384-1047-01 | 1 | 1 | 2 | 5 | MFB-3 Di3510f |
| PWB ASSY | 4384-1048-01 | 1 | 1 | 2 | 5 | MFB-3 Di2510f |
| ROLLER ASSY | 4658-0151-01 | 1 | 1 | 2 | 5 | MAN FEED SEPARATOR |
| CLEANING PAD ASSY | 1165-0756-01 | 1 | - | 1 | 3 | TRANSFER |
| PWB ASSY | 4011-0111-01 | 2 | - | 2 | 6 | CASSETTE SIZE DETECT |
| TORSION SPRING | 4030-3419-01 | 1 | - | 1 | 3 | MAN FEED |
| CONTROL PANEL ASSY | 4030-6056-02 | 1 | - | 1 | 3 | Di3510f |
| CONTROL PANEL ASSY | 4030-6056-02 | 1 | - | 1 | 3 | ME Di2510f |
| PWB ASSY PKG | 4384-1004-01 | 1 | - | 1 | 3 | PWB-FAX |
| PWB ASSY | 4384-1027-01 | 1 | - | 1 | 3 | INV BOOKSCANNER |
| PWB ASSY | 4384-1043-01 | 1 | - | 1 | 3 | BCR BOOKSCANNER |
| PWB ASSY | 4384-1050-01 | 1 | - | 1 | 3 | PWB-ROM BOOKSCANNER |
| GEAR | 1164-3508-01 | 1 | - | - | 1 | TRANSFER |

Product Basic
Product Configuration
System Specifications
Copier Specifications
Printer Specifications
Scanner Specifications
Fax Specifications
Consumables
Article Numbers
Installation
Maintenance
**Spare Parts**
Recommended Media
Appendix

| Spare Parts | Art.nr. | Qty Unit | A | B | C | Desc. |
|---|---|---|---|---|---|---|
| GEAR | 1164-3515-01 | 1 | - | - | 1 | TRANSFER |
| BUSHING | 1164-3549-01 | 4 | - | - | 4 | TRANSFER |
| TRANSFER ROLLER ASSY | 4030-0751-00 | 1 | - | - | 1 | TRANSFER |
| FUSING UNIT | 4030-0757-00 | 1 | - | - | 1 | 220-240V Di3510(f) |
| FUSING UNIT | 4030-0757-00 | 1 | - | - | 1 | 220-240V Di3010 |
| FUSING UNIT | 4030-0757-00 | 1 | - | - | 1 | 220-240V Di2510(f) |
| LAMP | 4384-1014-01 | 1 | - | - | 1 | BOOK SCANNER |
| PWN ASSY | 4349-0101-03 | 1 | 1 | 2 | 5 | FN-117 |
| TORSION SPRING | 4643-5220-01 | 1 | - | 1 | 3 | FN-117 |
| TORSION SPRING | 4349-2014-01 | 1 | - | 1 | 3 | FN-117 |
| ROLLER | 4030-3005-01 | 2 | 2 | 4 | 10 | PF-124, PF-210, PF-122 |
| ROLLER ASSY | 4030-0151-01 | 1 | 1 | 2 | 5 | PF-124, PF-210, PF-122 |
| ROLLER | 4348-3011-03 | 1 | - | - | 1 | PF-124, PF-210, PF-122 |
| PWB ASSY | 4348-0101-03 | 1 | - | 1 | 3 | PF-122 |
| PWB ASSY | 4348-0102-03 | 1 | 1 | 2 | 5 | PF-124 |
| PWB ASSY | 4011-0111-01 | 1 | - | 1 | 3 | PF-124, PF-210 |
| ROLLER | 4582-3014-01 | 1 | 1 | 2 | 5 | PICK UP (AFR-19) |
| ROLLER | 4582-3047-01 | 1 | 1 | 2 | 5 | SEPARATE (AFR-19) |
| ROLLER | 4344-5003-01 | 2 | 2 | 4 | 10 | TAKE-UP (AFR-19) |
| PWB ASSY | 4344-5004-01 | 1 | 1 | 2 | 5 | AFR-19 |
| PWB ASSY PCB | 4510-5059-01 | 1 | 1 | 2 | 5 | MK-1 |
| FILM | 4344-5025-01 | 1 | - | - | 1 | AFR-19 |
| SPRING | 4688-3038-01 | 2 | - | - | 2 | AFR-19 |

Product Basic
Product Configuration
System Specifications
Copier Specifications
Printer Specifications
Scanner Specifications
Fax Specifications
Consumables
Article Numbers
Installation
Maintenance
Spare Parts
Recommended Media
Appendix

## Recommended Media

| Paper | Manufacturer | Article Number |
|---|---|---|
| Minolta Premium Quality | Neusiedler Triotec 80 g/m² A4 | 9960 - 6120 |
| Minolta Premium Quality | Neusiedler Triotec 80 g/m² A3 | 9960 - 6121 |
| Minolta Profi | Neusiedler Universal 80 g/m² A4 | 9966 - 1380 |
| Minolta Profi | Neusiedler Universal 80 g/m² A3 | 9966 - 1370 |
| RCC 80 Recycling Paper | Steinbeis-Temming 80 g/m² A4 | --- |
| **IQ Premium** | Neusiedler 100 / 120 / 160 g/m² | --- |
| **IQ Premium** | Neusiedler 200 g/m² | --- |
| **OHP Films** | | |
| X-500 | Folex (100 µ) | --- |
| X-520 | Folex (125 µ) | --- |
| **ENVELOPS** | | |
| Distinction 120 weiss | Schneider & Söhne (120 g/m², 110 x 221 mm) | --- |
| For more details please refer to MIAMI database under Copier B/W / General / Copy Media & Consumables / “Recommended Copy / Print Media for B/W digital Systems”. | | |

Product Basic
Product Configuration
System Specifications
Copier Specifications
Printer Specifications
Scanner Specifications
Fax Specifications
Consumables
Article Numbers
Installation
Maintenance
Spare Parts
**Recommended Media**
Appendix

# Appendix

| Maximum paper capacity of FN-117 with different configurations | | | | |
|---|---|---|---|---|
| | **Total Capacity** | **Non-Sort / Sort / Group** | **Sort Staple** | **Saddle Staple** |
| **1st Tray** | 700 sheets A4 | 200 sheets | 200 sheets or 20 sets | |
| **2nd Tray** (A4 / B4 or A3) | | 500 / 250 sheets | 500 / 250 sheets or 50 / 25 sets | |
| **1st Tray** | 900 sheets A4 | 200 sheets | 200 sheets or 20 sets | |
| **2nd Tray** (A4 / B4 or A3) | | 500 / 250 sheets | 500 / 250 sheets or 50 / 25 sets | |
| **Additional Bin** | | 200 sheets | 200 sheets or 20 sets | |
| **1st Tray** | 900 sheets A4 | 200 sheets | 200 sheets or 20 sets | |
| **2nd Tray** (A4 / B4 or A3) | | 500 / 250 sheets | 500 / 250 sheets or 50 / 25 sets | |
| **Saddle Unit** | | | | 200 sheets or 20 sets |
| **1st Tray** | 800 sheets A4 | 200 sheets | 200 sheets or 20 sets | |
| **2nd Tray** (A4 / B4 or A3) | | 200 / 100 sheets | 200 / 100 or 20 / 10 sets | |
| **Additional Bin** | | 200 sheets | 200 sheets or 20 sets | |
| **Saddle Unit** | | | | 200 sheets or 20 sets |
| **1st Tray** | 1200 sheets A4 | 200 sheets | 200 sheets or 20 sets | |
| **2nd Tray** (A4 / B4 or A3) | | 500 / 250 sheets | 500 / 250 sheets or 50 / 25 sets | |
| **Mail Bin Unit** | | 500 sheets | | |
| **1st Tray** | 1100 sheets A4 | 200 sheets | 200 sheets or 20 sets | |
| **2nd Tray** (A4 / B4 or A3) | | 200 / 100 sheets | 200 / 100 sheets or 20 / 10 sets | |
| **Additional Bin** | | 200 sheets | 200 sheets or 20 sets | |
| **Mail Bin Unit** | | 500 sheets | | |

Product Basic
Product Configuration
System Specifications
Copier Specifications
Printer Specifications
Scanner Specifications
Fax Specifications
Consumables
Article Numbers
Installation
Maintenance
Spare Parts
Recommended Media
**Appendix**

| Finishing Matrix | | | | | |
|---|---|---|---|---|---|
| | **FN-117** | **Mail Bin Kit** | **Punching** | **Stapling** | **Fold / Saddle Stitch** |
| **FN-117** | | Yes | Yes | Yes | Yes |
| **Mail Bin Kit** | Yes | | Yes | No | No |
| **Punching** | Yes | Yes | | Yes | Yes |
| **Stapling** | Yes | No | Yes | | Yes |
| **Fold / Saddle Stitch** | Yes | No | Yes | Yes | |

Product Basic
Product Configuration
System Specifications
Copier Specifications
Printer Specifications
Scanner Specifications
Fax Specifications
Consumables
Article Numbers
Installation
Maintenance
Spare Parts
Recommended Media
Appendix

| Paper Weights | | | |
|---|---|---|---|
| | **Option / Feature** | **60 ~ 90 g/m²** | **91 ~ 210 g/m²** |
| **Di2510 Di3010 Di3510** | PF-122 | Yes | No |
| | PF-210 | Yes | No |
| | PF-124 | Yes | No |
| | Manual Feed | Yes | Yes |
| | Duplex | Yes | No |
| **FN-117** | 1st Tray | Yes | Yes |
| | 2nd Tray | Yes | Yes |
| | Additional Tray | Yes | No |
| | Mail Bin | Yes | No |
| **Finishing Functionality** | Stapling | Yes | No |
| | Punching | Yes | No |
| | Folding | Yes | No |
| **JS-203** | 1st Tray | Yes | Yes |
| | 2nd Tray | Yes | No |

Product Basic
Product Configuration
System Specifications
Copier Specifications
Printer Specifications
Scanner Specifications
Fax Specifications
Consumables
Article Numbers
Installation
Maintenance
Spare Parts
Recommended Media
**Appendix**

| HDD-6 Functionality | |
|---|---|
| **Copying Features** | ⇨ Overlay Functions<br>⇨ Multi-jobs (Job Stock : reservation for the next 5 jobs)<br>⇨ As File Memory (additional 2,000 pages can be stored) |
| **Printing Features** | ⇨ PDL spooling (spools jobs on HDD during printing)<br>⇨ PS Font downloading (Pi3505e/PS)<br>⇨ PDF downloading (Pi3505e/PS)<br>⇨ PDF Direct Printing (Pi3505e/PS)<br>⇨ Booklet Printing for PS (Pi3505e/PS) |
| **Scanning Features** | ⇨ Scan to HDD (Scan to Mailbox)<br>⇨ Scan to URL(in case of e-mail notification + HDD not e-mail notification + FTP) |

Product Basic
Product Configuration
System Specifications
Copier Specifications
Printer Specifications
Scanner Specifications
Fax Specifications
Consumables
Article Numbers
Installation
Maintenance
Spare Parts
Recommended Media
Appendix

**Combination of Print / Scan Options plus Memory**

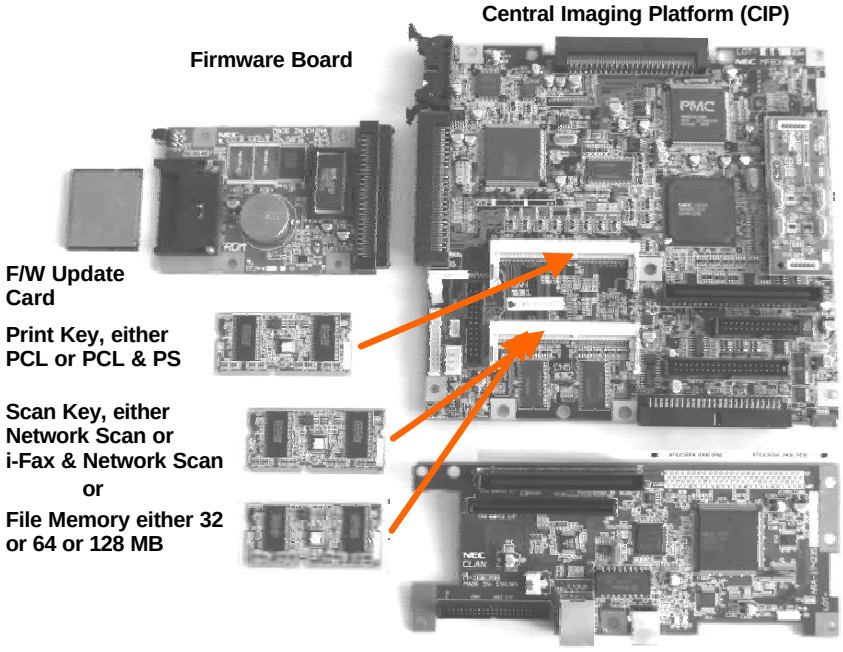


| Combination of Options | PCL | PCL / PS | SU-2 | SU-3 | Memory 32 / 64 / 128 MB | HDD-6 |
|---|---|---|---|---|---|---|
| **PCL** | | Either or | Yes | Yes | Yes | Yes |
| **PCL/PS** | Either or | | Yes | Yes | Yes | Yes |
| **SU-2** | Yes | Yes | | Either or | Either or | Yes |
| **SU-3** | Yes | Yes | Either or | | Either or | Yes |
| **Memory 32 / 64 / 128 MB** | Yes | Yes | Either or | Either or | | Yes |
| **HDD-6** | Yes | Yes | Yes | Yes | Yes | |

| NIC Card and Parallel Port | | | | | |
|---|---|---|---|---|---|
| | **HDD-6** | **SU-2** | **SU-3** | **Pi3505e** | **Pi3505e/PS** |
| **NC-4 NIC Card** | Required to connect HDD | Yes, for scanning via Network | Yes, for scanning via Network | Yes, for printing via USB and Network | Yes, for printing via USB and Network |
| **Parallel Port (Centronics)** | Not required | Not required (Parallel port is only for Printing) | Not required (Parallel port is only for Printing) | Yes, for printing via Parallel Port. | Yes, for printing via Parallel Port. |

Product Basic
Product Configuration
System Specifications
Copier Specifications
Printer Specifications
Scanner Specifications
Fax Specifications
Consumables
Article Numbers
Installation
Maintenance
Spare Parts
Recommended Media
Appendix

| What is delivered with the machine? | | |
|---|---|---|
| **Parts** | **Packed in Japan** | **Added in Europe** |
| PC-Drum | yes | |
| Starter | --- | --- |
| EDH | --- | --- |
| Original Cover | --- | --- |
| Copy Tray | --- | --- |
| Operator Manual | | yes |
| Face Sheets | | yes |
| Labels | | yes |
| Installation Kit | | yes |

| What is delivered with the controller Pi3505e | | |
|---|---|---|
| Installation Kit<br><br>Driver CD | | |

Product Basic
Product Configuration
System Specifications
Copier Specifications
Printer Specifications
Scanner Specifications
Fax Specifications
Consumables
Article Numbers
Installation
Maintenance
Spare Parts
Recommended Media
Appendix

| Drum Unit Lifetime | 4 Pages/Job | 3 Pages/Job | 2 Pages/Job | 3 Pages/Job |
|---|---|---|---|---|
| Di3510(f) | 100k | [92k] | [80k] | [57k] |
| Di3010 | [98k] | 90k | [79k] | [57k] |
| Di2510(f) | [88k] | 80k | [68k] | [57k] |

Product Basic
Product Configuration
System Specifications
Copier Specifications
Printer Specifications
Scanner Specifications
Fax Specifications
Consumables
Article Numbers
Installation
Maintenance
Spare Parts
Recommended Media
Appendix