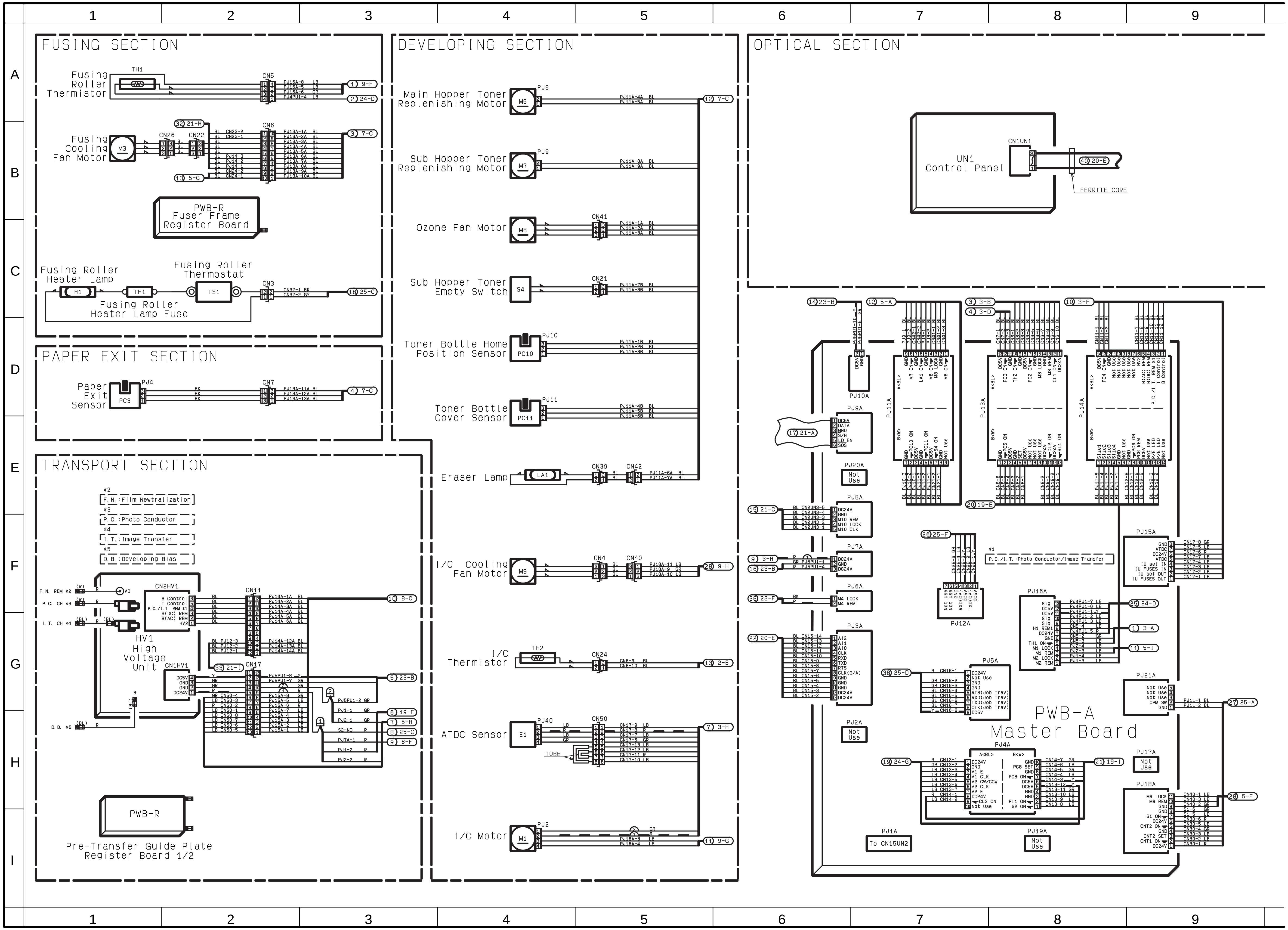
FUSING SECTION
Fusing Roller Thermistor
TH1
CN5
Fusing Cooling Fan Motor
M3
CN26
CN22
CN6
PWB-R Fuser Frame Register Board
Fusing Roller Heater Lamp
H1
TF1
Fusing Roller Thermostat
TS1
CN3
Fusing Roller Heater Lamp Fuse
PAPER EXIT SECTION
Paper Exit Sensor
PC3
PJ4
CN7
TRANSPORT SECTION
*2 F.N. :Film Newtralization
*3 P.C. :Photo Conductor
*4 I.T. :Image Transfer
*5 D.B. :Developing Bias
F.N. REM *2
P.C. CH *3
I.T. CH *4
D.B. *5
CN2HV1
HV1 High Voltage Unit
CN1HV1
CN11
CN17
PWB-R
Pre-Transfer Guide Plate Register Board 1/2
DEVELOPING SECTION
Main Hopper Toner Replenishing Motor
M6
PJ8
Sub Hopper Toner Replenishing Motor
M7
PJ9
Ozone Fan Motor
M8
CN41
Sub Hopper Toner Empty Switch
S4
CN21
Toner Bottle Home Position Sensor
PC10
PJ10
Toner Bottle Cover Sensor
PC11
PJ11
Eraser Lamp
LA1
CN39
CN42
I/C Cooling Fan Motor
M9
CN4
CN40
I/C Thermistor
TH2
CN24
ATDC Sensor
E1
PJ40
CN50
TUBE
I/C Motor
M1
PJ2
OPTICAL SECTION
UN1 Control Panel
CN1UN1
FERRITE CORE
PJ10A
PJ9A
PJ11A
PJ13A
PJ14A
PJ20A Not Use
PJ8A
PJ7A
PJ6A
PJ3A
PJ12A
*1 P.C./I.T. :Photo Conductor/Image Transfer
PJ15A
PJ16A
PJ5A
PJ21A
PWB-A Master Board
PJ4A
PJ17A Not Use
PJ18A
PJ2A Not Use
PJ1A To CN15UN2
PJ19A Not Use

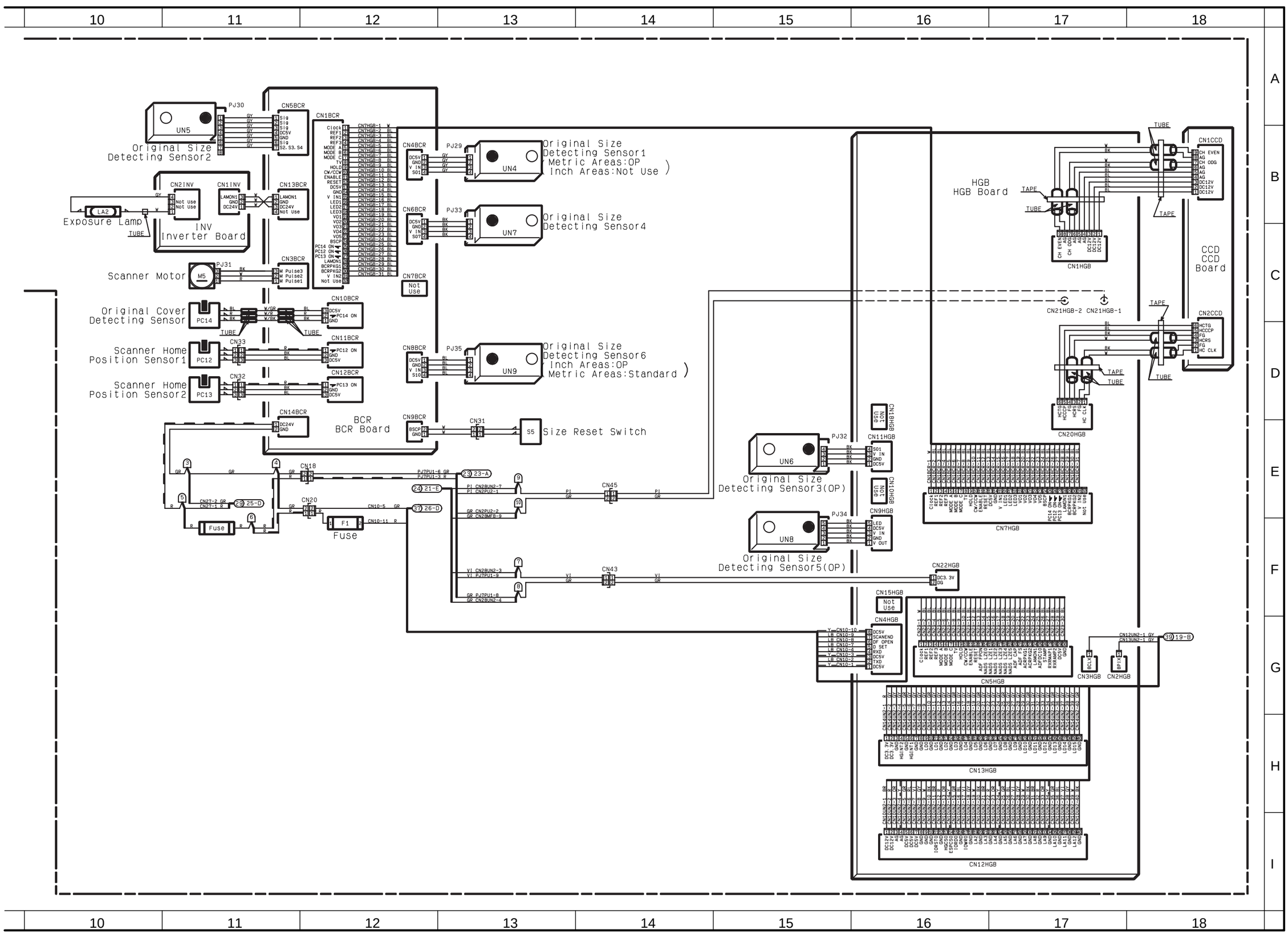

Original Size Detecting Sensor2
Exposure Lamp
INV Inverter Board
Scanner Motor
Original Cover Detecting Sensor
Scanner Home Position Sensor1
Scanner Home Position Sensor2
BCR BCR Board
Size Reset Switch
Original Size Detecting Sensor1 (Metric Areas:OP Inch Areas:Not Use)
Original Size Detecting Sensor4
Original Size Detecting Sensor6 (Inch Areas:OP Metric Areas:Standard)
Original Size Detecting Sensor3(OP)
Original Size Detecting Sensor5(OP)
HGB HGB Board
CCD CCD Board
Fuse

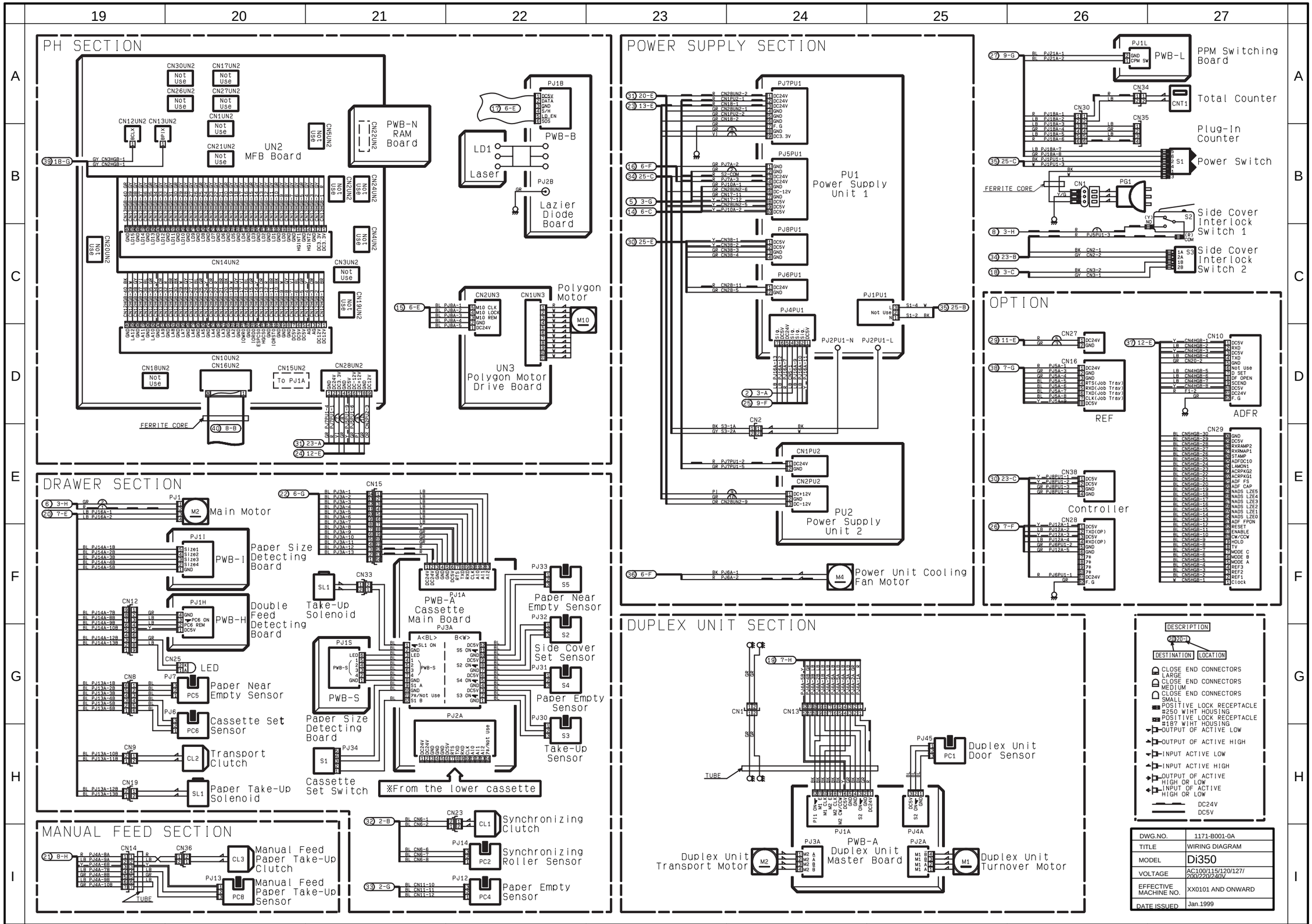
PH SECTION
CN30UN2 Not Use
CN17UN2 Not Use
CN26UN2 Not Use
CN27UN2 Not Use
CN1UN2 Not Use
CN21UN2 Not Use
CN12UN2
CN13UN2
UN2 MFB Board
PWB-N RAM Board
PJ1B
PWB-B
LD1 Laser
PJ2B
Lazier Diode Board
CN14UN2
CN3UN2 Not Use
CN18UN2 Not Use
CN10UN2
CN16UN2
CN15UN2 To PU1A
CN28UN2
FERRITE CORE
CN2UN3
CN1UN3
Polygon Motor
M10
UN3 Polygon Motor Drive Board
POWER SUPPLY SECTION
PJ7PU1
PJ5PU1
PU1 Power Supply Unit 1
PJ8PU1
PJ6PU1
PJ1PU1
PJ4PU1
PJ2PU1-N
PJ2PU1-L
CN2
CN1PU2
CN2PU2
PU2 Power Supply Unit 2
Power Unit Cooling Fan Motor
M4
PJ1L
PWB-L
PPM Switching Board
CN34
CNT1
Total Counter
CN30
CN35
Plug-In Counter
Power Switch
CN1
PG1
Side Cover Interlock Switch 1
Side Cover Interlock Switch 2
OPTION
CN27
CN16
REF
CN10
ADFR
CN29
CN38
Controller
CN28
DRAWER SECTION
PJ1
Main Motor
PJ11
PWB-I
Paper Size Detecting Board
CN12
PJ1H
PWB-H
Double Feed Detecting Board
CN25
LED
PJ7
PC5
Paper Near Empty Sensor
PJ6
PC6
Cassette Set Sensor
CN9
CL2
Transport Clutch
CN19
SL1
Paper Take-Up Solenoid
CN15
PJ1A
PWB-A Cassette Main Board
PJ3A
PJ2A
SL1
Take-Up Solenoid
CN33
PJ1S
PWB-S
Paper Size Detecting Board
PJ34
S1
Cassette Set Switch
※From the lower cassette
PJ33
S5
Paper Near Empty Sensor
PJ32
S2
Side Cover Set Sensor
PJ31
S4
Paper Empty Sensor
PJ30
S3
Take-Up Sensor
MANUAL FEED SECTION
CN14
CN36
CL3
Manual Feed Paper Take-Up Clutch
PJ13
PC8
Manual Feed Paper Take-Up Sensor
CN23
CL1
Synchronizing Clutch
PJ14
PC2
Synchronizing Roller Sensor
PJ12
PC4
Paper Empty Sensor
DUPLEX UNIT SECTION
CN1
CN13
TUBE
PJ45
PC1
Duplex Unit Door Sensor
PJ1A
PWB-A Duplex Unit Master Board
PJ3A
PJ4A
PJ2A
Duplex Unit Transport Motor
M2
Duplex Unit Turnover Motor
M1
DESCRIPTION
2020-1
DESTINATION
LOCATION
CLOSE END CONNECTORS LARGE
CLOSE END CONNECTORS MEDIUM
CLOSE END CONNECTORS SMALL
POSITIVE LOCK RECEPTACLE #250 WIHT HOUSING
POSITIVE LOCK RECEPTACLE #187 WIHT HOUSING
OUTPUT OF ACTIVE LOW
OUTPUT OF ACTIVE HIGH
INPUT ACTIVE LOW
INPUT ACTIVE HIGH
OUTPUT OF ACTIVE HIGH OR LOW
INPUT OF ACTIVE HIGH OR LOW
DC24V
DC5V
DWG.NO. 1171-B001-0A
TITLE WIRING DIAGRAM
MODEL Di350
VOLTAGE AC100/115/120/127/200/220/240V
EFFECTIVE MACHINE NO. XX0101 AND ONWARD
DATE ISSUED Jan.1999

ELECTRICAL PARTS LAYOUT

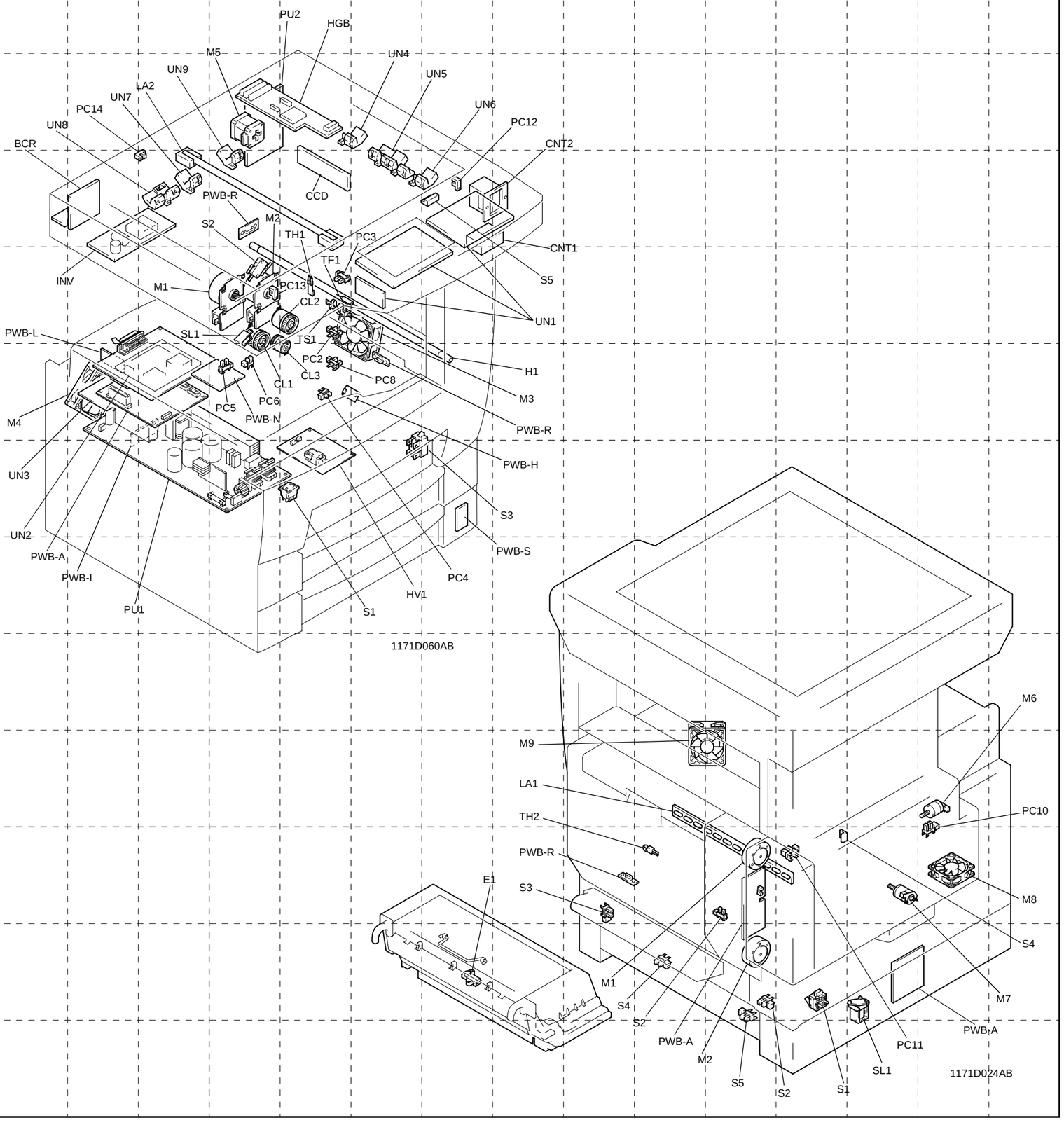

SYMBOL	PART NAME	LOCATION	GRID
BCR	BCR Board	11~12-A~E	1~2-C
CCD	CCD Board	18-B~D	5-C
CL1	Synchronizing Clutch	22-H~I	4-D~E
CL2	Transport Clutch	20-H	4~5-D
CL3	Manual Feed Paper Take-Up Clutch	20-I	4~5-D~E
CNT1	Total Counter	27-A	7~8-C~D
CNT2	Plug-In Counter	——	7~8-C
E1	ATDC Sensor	4-H	7-K
H1	Fusing Roller Heater Lamp	1-C	4~7-D~E
HV1	High Voltage Unit	1~2-F~H	5-E~F
HGB	HGB Board	16~18-B~I	4~5-B
INV	Inverter Board	10~11-B~C	2~3-C~D
LA1	Eraser Lamp	4-E	10~12-I~J
LA2	Exposure Lamp	10-B	3~5-C
LD1	Laser ✻1	——	——
M1	I/C Motor	4-I	4-D
M2	Main Motor	20-E	4-D
M3	Fusing Cooling Fan Motor	1-B	5~6-D~E
M4	Power Unit Cooling Fan Motor	24-F	2-E
M5	Scanner Motor	11-C	4-B
M6	Main Hopper Toner Replenishing Motor	4-A	14-I
M7	Sub Hopper Toner Replenishing Motor	4-B	13-J
M8	Ozone Fan Motor	4-C	14-J
M9	I/C Cooling Fan Motor	4-F	10~11-H~I
M10	Polygon Motor ✻1	——	——
PC2	Synchronizing Roller Sensor	22-I	5-D
PC3	Paper Exit Sensor	1-D	5-D
PC4	Paper Empty Sensor	22-I	5-E
PC5	Paper Near Empty Sensor	20-G	4-E
PC6	Cassette Set Sensor	20-G~H	4-E
PC8	Main Feed Paper Take-Up Sensor	20-I	5-E
PC10	Toner Bottle Home Position Sensor	4-D	14-I~J
PC11	Toner Bottle Cover Sensor	4-D~E	12-J
PC12	Scanner Home Position Sensor 1	11-D	7-C
PC13	Scanner Home Position Sensor 2	11-D	4-D
PC14	Original Cover Detecting Sensor	11-C	2~3-C
PU1	Power Supply Unit 1	24~25-A~D	2~4-E~F
PU2	Power Supply Unit 2	24~25-E~F	4-B~C
PWB-A	Master Board	6~9-D~I	2~3-E
PWB-B	Laser Diode Board ✻1	——	——
PWB-H	Double Feed Detecting Board	20-F~G	5~6-E
PWB-I	Paper Size Detecting Board	20-F	2~3-E~F
PWB-L	PPM Switching Board	26~27-A	2-E

SYMBOL	PART NAME	LOCATION	GRID
PWB-N	RAM Board	21-A~B	3~4-E
PWB-R	Fuser Frame Register Board	1~2-B~C	4-C
PWB-R	Pre-Transfer Guide Plate Register Board 1	1~2-H~I	6-E
PWB-R	Pre-Transfer Guide Plate Register Board 2	1~2-H~I	9-J
S1	Power Switch	27-B	5-F
S2	Side Cover Interlock Switch 1	27-B~C	4-D
S3	Side Cover Interlock Switch 2	27-C	6~7-E~F
S4	Sub Hopper Toner Empty Switch	4-C	12-J
S5	Size Reset Switch	13-E	7-C
SL1	Paper Take-Up Solenoid	20-H	4-D
TF1	Fusing Roller Heater Lamp Fuse	1-C	5-D
TH1	Fusing Roller Thermistor	1-A	5-D
TH2	I/C Thermistor	4-G	10-J
TS1	Fusing Roller Thermostat	2-C	5-D
UN1	Control Panel	7~8-A~B	6~8-C~D
UN2	MFB Board	19~21-A~D	2~3-D~E
UN3	Polygon Motor Drive Board	22-C~D	2-E
UN4	Original Size Detecting Sensor 1 (Option) ✻2	13-B	5~6-B
UN5	Original Size Detecting Sensor 2	10~11-A~B	6-C
UN6	Original Size Detecting Sensor 3 (Option)	15-E	6~7-C
UN7	Original Size Detecting Sensor 4	13-B~C	3-C
UN8	Original Size Detecting Sensor 5 (Option)	15-E~F	3-C
UN9	Original Size Detecting Sensor 6 ✻3	13-D	4-C
500-Sheet Cassette			
PWB-A	Cassette Main Board	21~22-F~H	13~14-K
PWB-S	Paper Size Detecting Board	21-G	7-F
S1	Cassette Set Switch	21-H	12-K
S2	Side Door Set Sensor	22-F~G	11-K
S3	Take-Up Sensor	22-G~H	9-J
S4	Paper Empty Sensor	22-G	10-K
S5	Paper Near Empty Sensor	22-F	11-K
SL1	Take-Up Solenoid	21-F	13-K
Duplex Unit			
PWB-A	Duplex Main Board	24~25-H~I	11-J~K
M1	Switch Back Motor	25-I	11-J
M2	Duplex Unit Transport Motor	24-I	11-K
S2	Duplex Unit Door Set Sensor	25-H	11-J

✻1: Components used in the PH Unit
✻2: Metric Areas Only
✻3: Standard for the Metric Areas
Optional for the Inch Areas

CONNECTORS LAYOUT

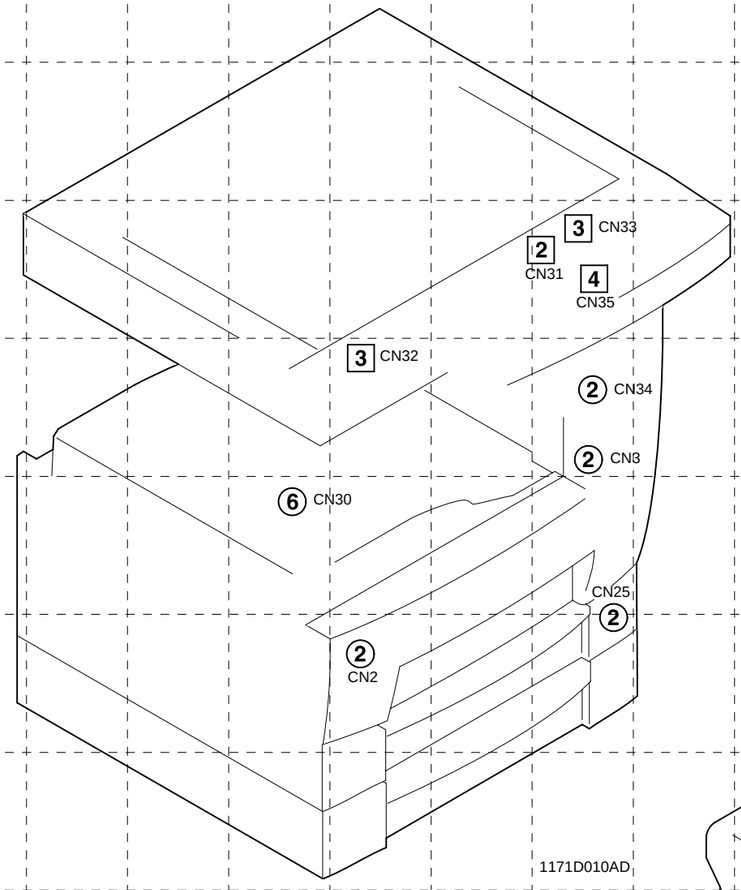

1171D010AD

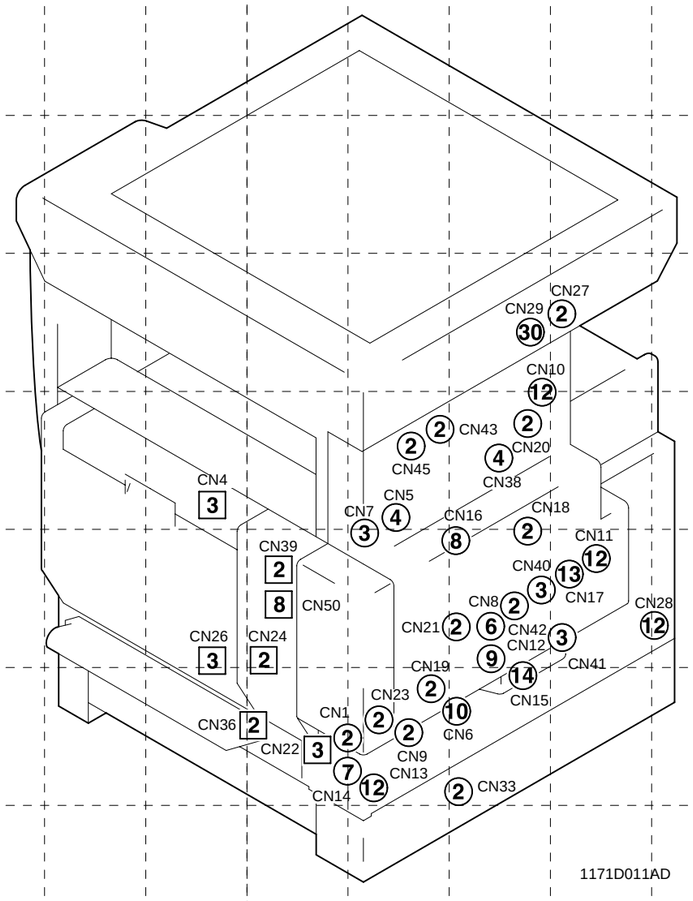

1171D011AD

Description

Number of Pin → ① Possible to confirm by removing external cover.

↘ 1 Not possible to confirm by removing external cover.

CN No.		LOCATION	GRID
CN2	2P	24-E	5-F
CN3	2P	2-C	7-D
CN4	3P	5-F	10-I
CN5	4P	2-A	12-I
CN6	10P	2-B	13-K
CN7	3P	2-D	12-I~J
CN8	6P	19-G	13-J
CN9	2P	19-H	12-K
CN10	12P	27-D	13-H~I
CN11	12P	2-F~G	14-J
CN12	9P	19-F~G	13-J
CN14	7P	19-I	11~12-K
CN15	14P	21-E~F	13-K
CN16	8P	26-D	13-J
CN17	13P	2-G~H	14-J
CN18	2P	12-E	13-I~J
CN19	2P	19-H	12-K
CN20	2P	12-E	13-I
CN21	2P	5-C	13-J
CN22	3P	2-B	11-K
CN23	2P	22-H~I	12-K
CN24	2P	5-G	11-J
CN25	2P	20-G	7-E~F
CN26	3P	2-B	10-J
CN27	2P	26-D	14-H
CN28	12P	26-F	14~15-J
CN29	30P	27-E~F	13-H
CN30	6P	26-A~B	4-E
CN31	2P	13-E	7-C
CN32	3P	11-D	5-D
CN33	3P	11-D	7-C
CN34	2P	26-A	7-D
CN35	4P	26-B	7-C
CN36	2P	20-I	10~11-K
CN38	4P	26-E	13-I
CN39	2P	5-E	11-J
CN40	3P	5-F	13-J
CN41	3P	5-C	14-J
CN42	2P	5-E	14-J
CN43	2P	14-F	12-I
CN45	2P	14-E	12-I
CN50	8P	5-H	11-J
500-Sheet Cassette			
CN33	2P	21-F	13-K
Duplex Unit			
CN1	2P	24-G	11~12-K
CN13	12P	24-G	12-K