FrameMaker Ver.5.5E(PC) COVER [GENERAL] FOR Di350
98.12.25

Copyright
1999 MINOLTA Co., Ltd.
Printed in Japan

Use of this manual should be strictly supervised to avoid disclosure of confidential information.

MINOLTA Co., Ltd.

1171-7990-12 99041500
17196

Di350

Di350 SERVICE MANUAL [GENERAL]

SERVICE MANUAL

[GENERAL]

INDEX (GENERAL)

GENERAL

MECHANICAL/ELECTRICAL

FrameMaker Ver.5.5E(PC) Di350 GENERAL, MECHANICAL/ELECTRICAL
98.12.18

Di350

GENERAL

MINOLTA

CONTENTS

1. SAFETY INFORMATION G-1
2. SPECIFICATIONS G-8
3. PRECAUTIONS FOR INSTALLATION G-10
4. PRECAUTIONS FOR USE G-11
5. HANDLING OF THE CONSUMABLES G-12
6. OTHER PRECAUTIONS G-12
7. SYSTEM OPTIONS G-13

1171SBG0100A

1 SAFETY INFORMATION

Laser Safety

This is a digital machine which prints by means of a laser. There is no possibility of danger from the laser, provided the machine is operated according to the instructions in this manual.

Since radiation emitted by the laser is completely confined within protective housing, the laser beam cannot escape from the machine during any phase of user operation.

This machine is certified as a Class 1 product. This means the machine does not produce hazardous laser radiation.

CAUTION: The use of controls, adjustments or performance of procedures other than those specified in this manual may result in hazardous radiation exposure. Because of this, Minolta strongly recommends that you operate your copy machine only as described in this documentation.

Internal Laser Radiation

Maximum Average Radiation Power: 36.7µW at laser aperture of the print head unit

Wavelength: 770-810nm

This product employs a Class IIIb Laser Diode that emits an invisible laser beam.
The Laser Diode and Scanning Polygon Mirror are incorporated in the print head unit.
The print head unit is NOT A FIELD SERVICE ITEM.
Therefore, the print head unit should not be opened under any circumstances.

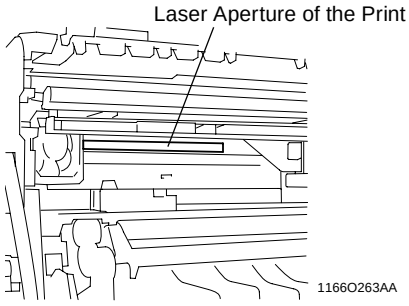

This figure shows the view inside the Right Side Door with the Imaging Unit removed.

For United States

CDRH regulation
This copier is certified as a Class 1 Laser product under the Radiation Performance Standard according to the Food, Drug and Cosmetic Act of 1990. Compliance is mandatory for Laser products marketed in the United States and is reported to the Center for Devices and Radiological Health (CDRH) of the U.S. Food and Drug Administration of the U.S. Department of Health and Human Services (DHHS). This means that the device does not produce hazardous laser radiation.

The label shown on page G-3 indicates compliance with the CDRH regulations and must be attached to laser products marketed in the United States.

CAUTION: Use of controls, adjustments or performance of procedures other than those specified in this manual may result in hazardous radiation exposure.

This is a semiconductor laser. The maximum power of the laser diode is 5mW and the wavelength is 770-810nm.

For Europe

CAUTION: Use of controls, adjustments or performance of procedures other than those specified in this manual may result in hazardous radiation exposure.

This is a semiconductor laser. The maximum power of the laser diode is 5mW and the wavelength is 770-810nm.

For Denmark

ADVARSEL
Usynlig laserstråling ved åbning, når sikkerhedsafbrydere er ude af funktion.
Undgå udsættelse for stråling.

Klasse 1 laser produkt der opfylder IEC60825 sikkerheds kravene.

For Finland

LUOKAN 1 LASERLAITE

VAROITUS
Laitteen käyttäminen muulla kuin tässä käyttöohjeessa mainitulla tavalla saattaa altistaa käyttäjän turvallisuusluokan 1 ylittävälle näkymättömälle lasersäteilylle.

VARO
Avattaessa ja suojalukitus ohitettaessa olet alttiina näkymättomälle lasersäteilylle. Älä katso säteeseen.

For Sweden

KLASS 1 LASER APPARAT

VARNING
Om apparaten används på annat sätt än i denna bruksanvisning specificerats, kan användaren utsättas för osynlig laserstrålning, som överskrider gränsen för laserklass 1.

VARNING
Osynlig laserstråining när denna del är öppnad och spärren är urkopplad. Betrakta ej stråien.

For Norway

ADVERSEL
Dersom apparatet brukes på annen måte enn spesifisert i denne bruksanvisning, kan brukeren utsettes för unsynlig laserstrålning, som overskrider grensen for laser klass 1.

Dette en halveder laser. Maksimal effekt till laserdiode er 5mW og bølgelengde er 770-810nm.

Laser Safety Label

A laser safety label is attached to the outside of the copy machine as shown below.

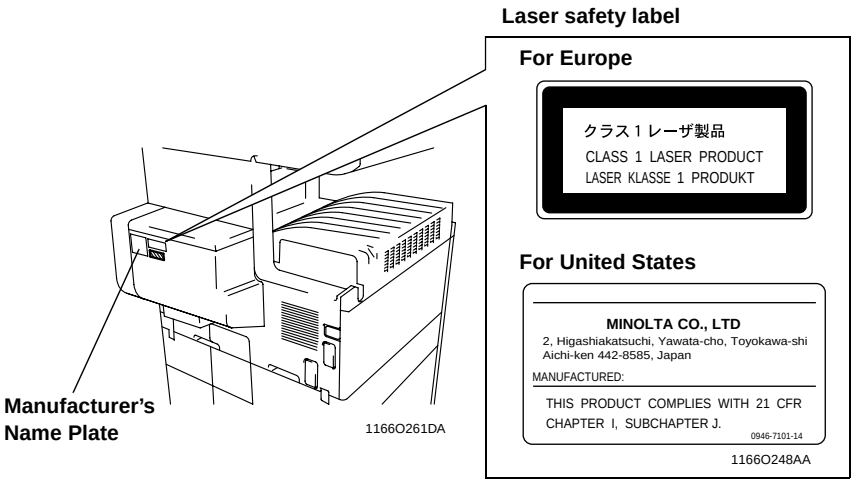

The Manufacturer's Name Plate is affixed at the position illustrated above.
Please write down the Model Name and Serial No. of your copier here.

Model:
Serial No.:

Label inside copy machine

The following laser safety label will be attached inside the copy machine as shown below.

Please read the following for your own protection.

⚠ Caution

Opening the cover indicated by the Caution label may expose you to harmful laser radiation which could cause damage or loss of eyesight. Do not open the cover when the power is on.

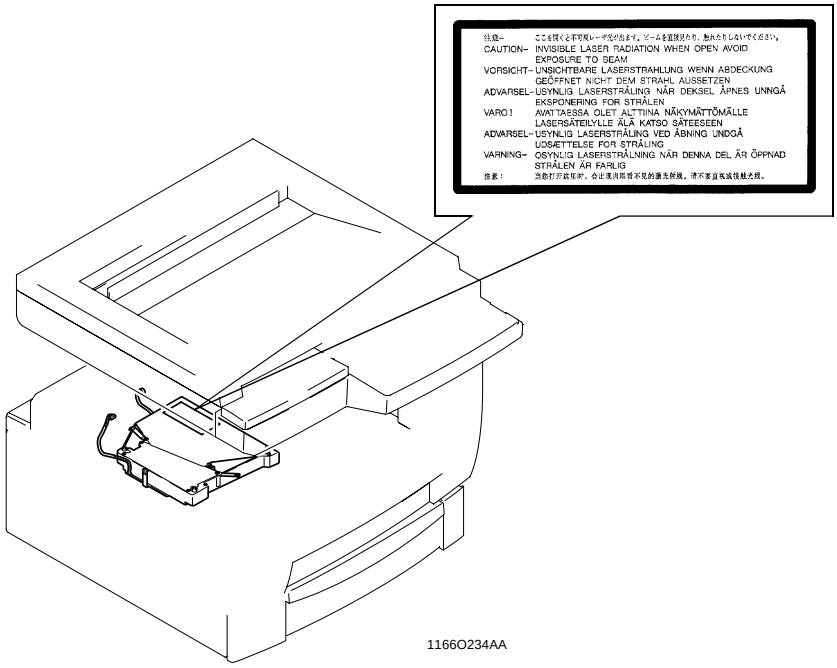

ALL Areas

CAUTION
Danger of explosion if battery is incorrectly replaced.
Replace only with the same or equivalent type
recommended by the manufacturer.
Dispose of used batteries according
to the manufacturer's instructions.

Germany only

VORSICHT!
Explosinsgefahr bei unsachgemäßen austausch der
batterie. Ersatz nur durch denselben oder einen vom hersteller
empfohlenen ähnlichen typ. Entsorgung gebrauchter batterien
nach angaben des herstellers.

Denmark only

ADVARSEL!
Lithiumbatteri - Eksplosionsfare ved fejlagtig håndtering
Udskiftning må kun ske med batteri
af samme fabrikat og type.
Levér det brugte batteri tilbage til leverandøren.

Norway only

ADVARSEL
Eksplosjonsfare ved feilaktig skifte av batteri.
Benytt samme batteritype eller en tilsvarende
type anbefalt av apparatfabrikanten.
Brukte batterier kasseres i henhold til fabrikantens
instruksjoner.

Sweden only

VARNING
Explosionsfara vid felaktigt batteribyte.
Använd samma batterityp eller en ekvivalent
typ som rekommenderas av apparattillverkaren.
Kassera använt batteri enligt fabrikantens
instruktion.

Finland only

VAROITUS
Paristo voi räjähtää, los se on virheellisesti asennettu.
Vaihda paristo ainoastaan laitevalmistajan suosittelemaan
tyyppiin. Hävitä Käytetty paristo valmistajan ohjeiden
mukaisesti.

ALL Areas

CAUTION

"Replace only with the same or equivalent type recommended by the manufacturer. Dispose of used IC Package according to the manufacturer's instructions."

Germany only

VORSICHT!

⇒"Austausch nur durch denselben oder einen vom Hersteller empfohlenen, gleichwertigen typ. Entsorgung gebrauchter Batterien nach Angaben des Herstellers.

Service Precautions

(1) Precautions

Refer to DISASSEMBLY/CLEANING for the Disassembly procedure.

1. When unplugging connectors on the P.W.B.s themselves, always make sure the power is OFF first. Be sure to unplug the copier before disassembling and cleaning.
2. Always unplug connectors by holding the connector housing. Pulling on the wires can lead to problems with poor contact.
3. It is recommended that a body ground not be used when carrying out any troubleshooting procedure. Be sure to ground DC lines to a ground test point on the P.W.B.

(2) At Replacement/Adjustment/Cleaning

1. Be sure to handle the Fusing Unit carefully. It remains hot a while after the copier is turned off.
2. Do not disassemble the Imaging Cartridge or Print Head Unit.
3. Do not expose the PC Drum of the Imaging Cartridge to direct sunlight or to room lighting for more than 5 minutes.
4. Turn off the power before removing the Print Head Unit to protect the eyes from possible exposure to the laser beam.
5. Use only a Fuse of the indicated rating.

(3) During Operation

1. Keep your hands, clothing, etc. well away from operating or rotating parts.
2. Never touch the terminals of electrical parts or high voltage parts.
3. This copier uses an invisible laser beam. To prevent a laser beam leak, the copier performs a trial run to make sure the covers are in position.

Handling the P.W.B.

Observe the following precautions when handling a P.W.B. with ICs.

(1) During Transportation/Storage

1. During transport and storage, P.W.B.s should be kept in conductive bags or on mats and not taken out unless absolutely necessary.
2. P.W.B.s should be stored in a place where direct sunlight does not strike them.
3. Do not touch IC terminals with your hands.

(2) At Replacement

1. Before removing connectors from a P.W.B., make sure the copier has been unplugged.
2. When P.W.B.s are taken out of their conductive bags or off their mats, hold them by their edges to avoid touching the terminals or the patterned surfaces.
3. Before installing connectors on a P.W.B., make sure the copier has been unplugged.

1171SBG0200A

2 SPECIFICATIONS

TYPE	:	Console/Desktop Type
PHOTOCONDUCTOR	:	Organic Photoconductor
COPYING SYSTEM	:	Electrostatic Dry Powdered Image Transfer to Plain Paper with a Laser
ORIGINAL SCANNING RESOLUTION	:	600 dpi
PAPER FEEDING SYSTEM	:	3-way system Manual Feed Tray: Single sheet feeding Multi-Purpose (MP) Cassette: Plain paper: Approx. 250 sheets Special paper: Approx. 20 sheets 500-Sheet Cassette: Approx. 500 sheets
EXPOSURE SYSTEM	:	Mirror Scanning, Slit Exposure
DEVELOPING SYSTEM	:	MT-HG System
CHARGING SYSTEM	:	Comb Electrode (1) DC Negative Corona with Scorotron System
IMAGE TRANSFER	:	Roller Image Transfer
PAPER SEPARATING SYSTEM	:	Paper Separator Fingers and Charge Neutralizing Plate
FUSING SYSTEM	:	Heat Roller
PAPER DISCHARGING SYSTEM	:	Charge Neutralizing Brush
MAXIMUM ORIGINAL SIZE	:	A3L, 11" × 17"L

COPY MEDIUM

Paper Source		MP Cassette	Manual Feed Tray
Medium	Plain paper (60 to 90 g/m^2)	❍	❍
	Transparencies	❍	❍
	Thick paper (91 to 157 g/m^2)	❍	❍
	Postcards (190 g/m^2)	❍	❍
	Recycled paper	❍	❍
Dimensions	Maximum (Width × Length)	297 × 432 mm	297 × 432 mm
	Minimum (Width × Length)	90 × 140 mm	90 × 140 mm

m: Permissible –: Not permissible

MULTIPLE COPIES	:	1 to 999
WARMING-UP TIME	:	70 sec. or less with room temperature of 23°C and rated power voltage
FIRST COPY TIME	:	4.7 sec. (A4C, MP Cassette, full size mode) 4.7 sec. (8-1/2" × 11"C, MP Cassette, full size mode)

CONTINUOUS COPY SPEED (copies/min.)

- Metric -

Size	Speed
A3L	20
B4L	23
A4L	27
A4C	35
B5L	30
B5C	40

- Inch -

Size	Speed
11" × 17"L	20
8-1/2" × 14"L	23
8-1/2" × 11"L	28
8-1/2" × 11"C	35

ZOOM RATIOS

		- Metric -	- Inch -
Fixed	Full Size	× 1.000	× 1.000
	Enlargement	× 2.000	× 2.000
		× 1.414	× 1.545
		× 1.224	× 1.294
		× 1.154	× 1.214
	Reduction	× 0.866	× 0.785
		× 0.816	× 0.733
		× 0.707	× 0.647
		× 0.500	× 0.500
Variable	25% to 400% (in 0.1% increments)		

LENS : Through Lens (F = 4.0, f = 62 mm)
EXPOSURE LAMP : Fluorescent Lamp
FUSING TEMPERATURE : 190°C

POWER/CURRENT CONSUMPTION (Copier Only)

Exposure Lamp (Rating)	Fusing Roller Heater Lamp (Rating)	Max. Power Consumption (full system)	Max. Current Consumption (full system)
24V 20W	775W	1050W	120V, 10A 230V, 5A

POWER REQUIREMENTS : 120V, 230V, 50/60Hz

ENVIRONMENTAL CONDITIONS

Temperature	10 to 32°C with a fluctuation of 10°C or less per hour
Humidity	15 to 85% RH with a fluctuation of 10% RH or less per hour
Ambient Illumination	3,000 lux or less
Levelness	1° (1.75 mm/100 mm)

DIMENSIONS : Width ... 616 mm, 24-1/4"
Depth ... 707 mm, 27-3/4"
Height ... 635 mm, 25"
WEIGHT : 55.5 kg, 122-1/4 lbs.

1171SBG0300A

3 PRECAUTIONS FOR INSTALLATION

Installation Site

To ensure safety and utmost performance of the copier, the copier should NOT be used in a place:

- Where it will be subjected to extremely high or low temperature or humidity.
- Which is exposed to direct sunlight.
- Which is in the direct air stream of an air conditioner, heater or ventilator.
- Which puts the operator in the direct stream of exhaust from the copier.
- Which has poor ventilation.
- Where ammonia gas might be generated.
- Which does not have a stable, level floor.
- Where it will be subjected to sudden fluctuations in either temperature or humidity. If a cold room is quickly heated, condensation forms inside the copier, resulting in blank spots in the copy.
- Which is near any kind of heating device.
- Where it may be splashed with water.
- Which is dirty or where it will receive undue vibration.
- Which is near volatile flammables or curtains.

Power Source

Use an outlet with a capacity of 120V/10A, or 220V to 240V/5A or more.

- If any other electrical equipment is sourced from the same power outlet, make sure that the capacity of the outlet is not exceeded.
- Use a power source with little voltage fluctuation.
- Never connect by means of a multiple socket any other appliances or machines to the outlet being used for the copier.
- Make the following checks at frequent intervals:
  ✻Is the power plug abnormally hot?
  ✻Are there any cracks or scrapes in the cord?
  ✻Has the power plug been inserted fully into the outlet?
  ✻Does something, including the copier itself, ride on the power cord?
- Ensure that the copier does not ride on the power cord or communications cable of other electrical equipment, and that it does not become wedged into or underneath the mechanism.

Grounding

To prevent receiving electrical shocks in the case of electrical leakage, always ground the copier.

- Connect the ground wire to:
  ✻The ground terminal of the outlet.
  ✻A grounding contact which complies with the local electrical standards.
- Never connect the ground wire to a gas pipe, the ground wire for a telephone, or a water pipe.

1171SBG0400A

4 PRECAUTIONS FOR USE

To ensure that the copier is used in an optimum condition, observe the following precautions.

- Never place a heavy object on the copier or subject the copier to shocks.
- Insert the power plug all the way into the outlet.
- Do not attempt to remove any panel or cover which is secured while the copier is making copies.
- Do not turn OFF the Power Switch while the copier is making copies.
- Provide good ventilation when making a large number of copies continuously.
- Never use flammable sprays near the copier.
- If the copier becomes inordinately hot or produces abnormal noise, turn it OFF and unplug it.
- Do not turn ON the Power Switch at the same time when you plug the power cord into the outlet.
- When unplugging the power cord, do not pull on the cord; hold the plug and pull it out.
- Do not bring any magnetized object near the copier.
- Do not place a vase or vessel containing water on the copier.
- Be sure to turn OFF the Power Switch at the end of the workday or upon power failure.
- Use care not to drop paper clips, staples, or other small pieces of metal into the copier.

Operating Environment

The operating environmental requirements of the copier are as follows:

- Temperature: 10°C to 32°C with a fluctuation of 10°C per hour
- Humidity: 15% to 85% RH with a fluctuation of 10% RH per hour

Power Requirements

The power source voltage requirements are as follows:

- Voltage Fluctuation: AC120/220-240V
  - ±10% (Copying performance assured)
  - +10% -15% (Paper feeding performance assured)
- Frequency Fluctuation: 50/60 Hz ±0.3%

1171SBG0500A

5 HANDLING OF THE CONSUMABLES

Before using any consumable, always read the label on the container carefully.

- Use the right toner. The applicable copier model name is indicated on the toner bottle.
- Paper is easily damaged by dampness. To prevent absorption of moisture, store paper, which has been removed from its wrapper but not loaded into the drawer, in a sealed plastic bag in a cool, dark place.
- Keep consumables out of the reach of children.
- Do not touch the PC Drum with bare hands.
- Store the paper, toner, and other consumables in a place free from direct sunlight and away from any heating apparatus.
- The same sized paper is of two kinds, short grain and long grain. Short grain paper should only be fed through the copier crosswise, long grain paper should only be fed lengthwise.
- If your hands become soiled with toner, wash them with soap and water immediately.
- Do not throw away any used consumables (PC Drum, starter, toner, etc.). They are to be collected.

NOTE

Do not burn, bury in the ground, or throw into the water any consumables (PC Drum, starter, toner, etc.).

1171SBG0600A

6 OTHER PRECAUTIONS

The Print Head Unit of this copier uses a laser diode that emits a laser beam. Use the following precautions when performing service jobs at the users' premises.

- When a service job needs to be performed in the laser beam path, such as when working around the Print Head Unit and PC Drum, be sure first to turn the copier OFF.
- If the job requires that the power cord be left plugged in, observe the following precautions

1. Take off your watch, ring, and any other reflective object and wear laser protective goggles.
2. At the job site, select a place that is as far as possible away from the users and that is enclosed by walls.
3. Do not bring a highly reflective tool into the laser beam path during the service job.

1171SBG0700A

7 SYSTEM OPTIONS

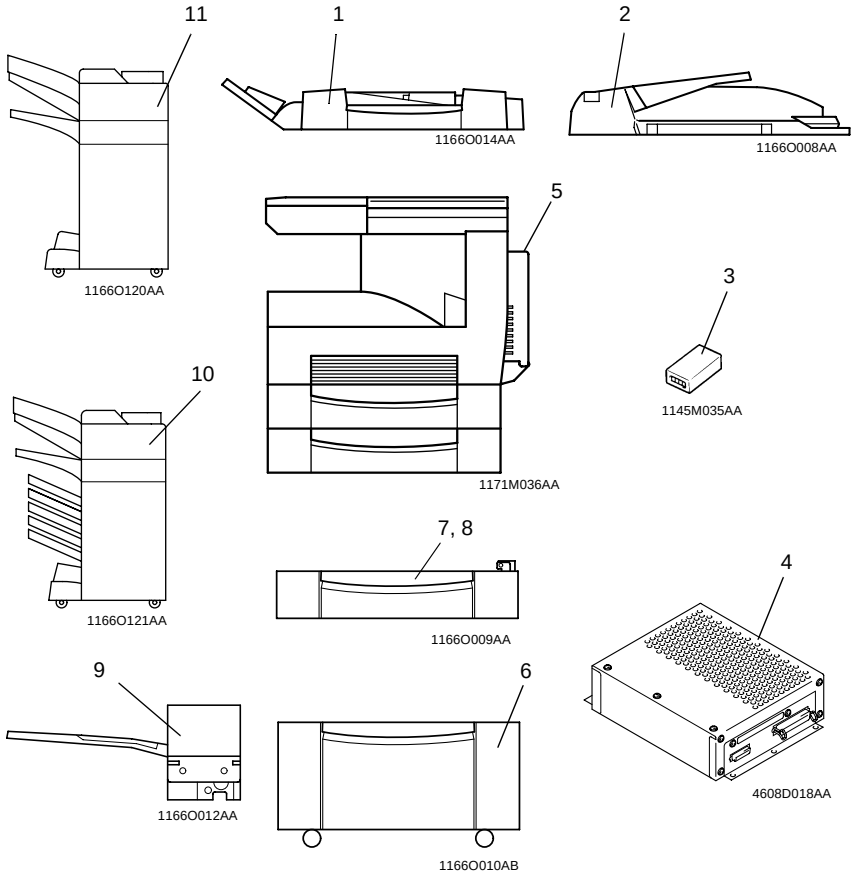

1. Duplexing Document Feeder (AFR-14)
2. Automatic Document Feeder (AF-7)
3. Plug-In Counter
4. Printer Controller (Pi3500)
5. Duplex Unit (AD-10) ✻
6. Large Capacity Cabinet (PF-106)
7. Paper Feed Unit (PF-108)
8. Paper Feed Unit (PF-110)
9. Job Tray (JS-200)
10. Mailbin Finisher (FN-500)
11. Finisher (FN-100)

✻ See the option service manual for the details of AD-10.

FrameMaker Ver.5.5E(PC) Di350 GENERAL, MECHANICAL/ELECTRICAL
98.12.18

Di350

MECHANICAL/ ELECTRICAL



MINOLTA

CONTENTS

1. CROSS-SECTIONAL VIEW M-1
2. COPYING PROCESS M-2
3. DRIVE SYSTEM M-4
4. OPERATING SEQUENCE M-5
5. CPU OVERRUN MONITOR FUNCTION M-8
6. IMAGE STABILIZATION SYSTEM M-9
7. IMAGING CARTRIDGE (I/C) M-10
   7-1. I/C Drive Mechanism M-11
   7-2. Identification and Life of I/C M-11
8. PC DRUM M-12
9. DRUM CHARGING M-13
10. ERASE LAMP M-14
11. IR SECTION M-15
   11-1. Exposure Section: Construction and Function M-16
   11-2. Image Processing Flow M-17
   11-3. Original Size Detection M-18
   11-4. Original Size Detection Timing M-20
   11-5. Scanner and 2nd/3rd Mirrors Carriage Moving Mechanism M-21
12. PH SECTION M-22
   12-1. PH Components M-23
   12-2. Laser Emission Timing (SOS Signal) M-24
13. DEVELOPING UNIT M-25
   13-1. Sleeve/Magnet Roller M-26
   13-2. Developing Bias M-27
   13-3. ATDC Sensor M-28
   13-4. Sub Hopper Toner Replenishing Mechanism M-29
   13-5. Sub Hopper Toner Empty Detecting Mechanism M-30
   13-6. Main Hopper Toner Replenishing Mechanism M-31
   13-7. I/C Cooling Fan Motor M-32
   13-8. Ozone Fan Motor M-32
14. PAPER TAKE-UP/FEED SECTION M-33
   14-1. MP Cassette Paper Lifting Plate M-33
   14-2. MP Cassette-in-Position Detection M-34
   14-3. MP Cassette Paper Empty Detection M-35
   14-4. MP Cassette Paper Size Detection M-36
   14-5. Paper Take-Up Mechanism M-37
   14-6. Manual Bypass Tray M-37
   14-7. Paper Take-Up Retry Mechanism M-38
15. SYNCHRONIZING ROLLERS M-39
   15-1. Synchronizing Roller Drive Mechanism/Control M-39
   15-2. Paper Dust Remover M-40
16. IMAGE TRANSFER AND PAPER SEPARATION M-41
17. PC DRUM PAPER SEPARATOR FINGERS M-42
18. PC DRUM CLEANING M-43

19. FUSING UNIT M-44
19-1. Drive Mechanism M-45
19-2. Fusing Rollers Pressure Mechanism M-45
19-3. Fusing Temperature Control M-46
19-4. CPM Control M-47
20. PAPER EXIT UNIT M-48
21. FUSING COOLING FAN MOTOR M-49
22. POWER UNIT COOLING FAN MOTOR M-50

1171SBM0100A

1 CROSS-SECTIONAL VIEW

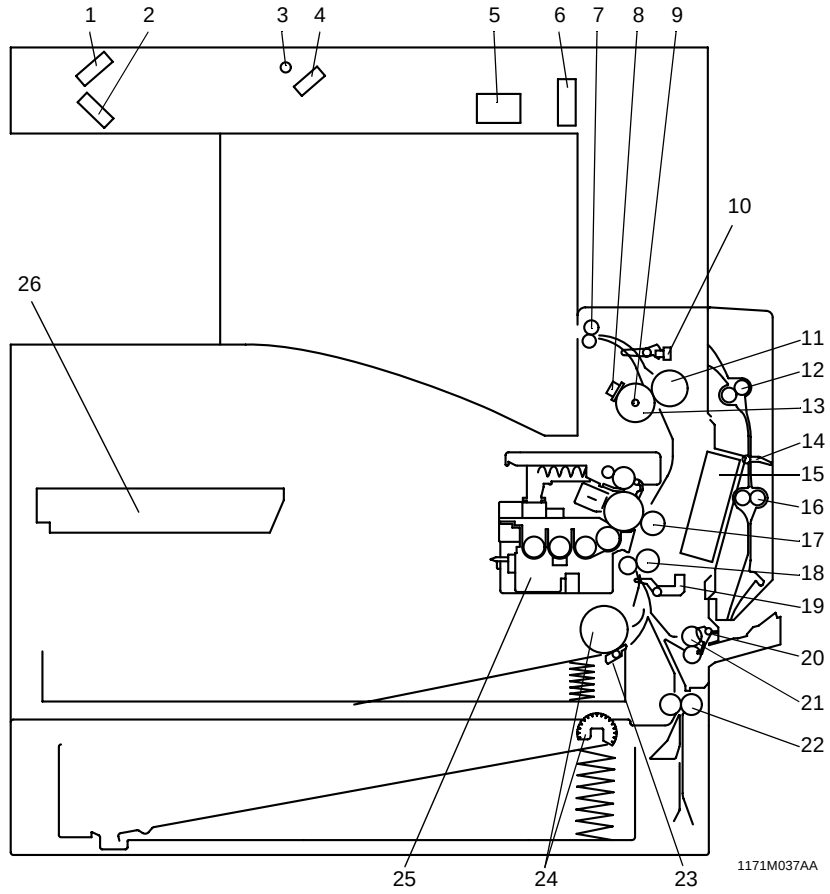

1. 2nd Mirror
2. 3rd Mirror
3. Exposure Lamp
4. 1st Mirror
5. Lens
6. CCD Unit
7. Paper Exit Roller
8. Fusing Roller Thermostat (TS1)
9. Fusing Roller Heater Lamp (H1)
10. Paper Exit Sensor (PC3)
11. Right Fusing Roller
12. Duplex Unit Transport Roller 1
13. Left Fusing Roller
14. Duplex Unit Transport Sensor (PI1)
15. Fusing Cooling Fan Motor (M3)
16. Duplex Unit Transport Roller 2
17. Image Transfer Roller
18. Synchronizing Roller
19. Synchronizing Roller Sensor (PC2)
20. Manual Feed Paper Take-Up Sensor (PC8)
21. Manual Feed Paper Take-Up Roll
22. Vertical Transport Roller
23. Paper Separator Pad
24. Paper Take-Up Roll
25. Imaging Cartridge (I/C)
26. PH Unit

1171SBM0200A

2 COPYING PROCESS

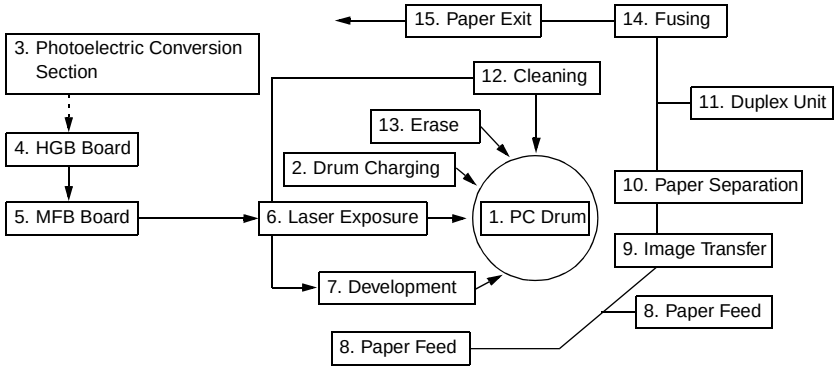

1. PC Drum
- The drum is an aluminum cylinder coated with photosensitive material on which an electrostatic latent image is produced.

2. Drum Charging
- A scorotron charger employing a comb electrode generates a negative DC charged layer on the surface of the PC Drum.

3. Photoelectric Conversion Section
- The Exposure Lamp directs light onto the original. The light reflected off the original is directed and resized by the mirrors and lens so as to produce a reduced-size image on the CCD Sensor.

4. HGB Board
- Converts an electric signal into a corresponding 8-bit digital image signal (A/D conversion), makes various corrections, and outputs the results to the MFB Board.

5. MFB Board
- Compresses the image data received from the HGB Board, stores it, and uncompresses it.

6. Laser Exposure
- The laser beam emitted from the LD (laser diode) strikes the surface of the PC Drum, creating an electrostatic latent image.

7. Development
- Negatively charged toner adheres to the latent image on the PC Drum surface, creating a visible image.

8. Paper Feed
- Feeds sheets of paper from the appropriate paper source.

9. Image Transfer
- An Image Transfer Roller is used. A positive charge applied to the roller causes the visible image on the surface of the PC Drum to transfer onto the front side of the paper.

10. Paper Separation
- The PC Drum Separator Fingers remove paper from the surface of the PC Drum.

11. Duplex Unit
- Makes 2-sided copies.

12. Cleaning
- The Cleaning Blade scrapes residual toner off the surface of the PC Drum and the toner is recycled back to the Developing Unit.

13. Erase
- The PC Drum is exposed to light, which effectively removes any residual charge from the drum surface.

14. Fusing
- Heat and pressure applied by the Right and Left Fusing Rollers fuse toner on the paper.

15. Paper Exit
- Feeds paper out of the copier.

1171SBM0300A

3 DRIVE SYSTEM

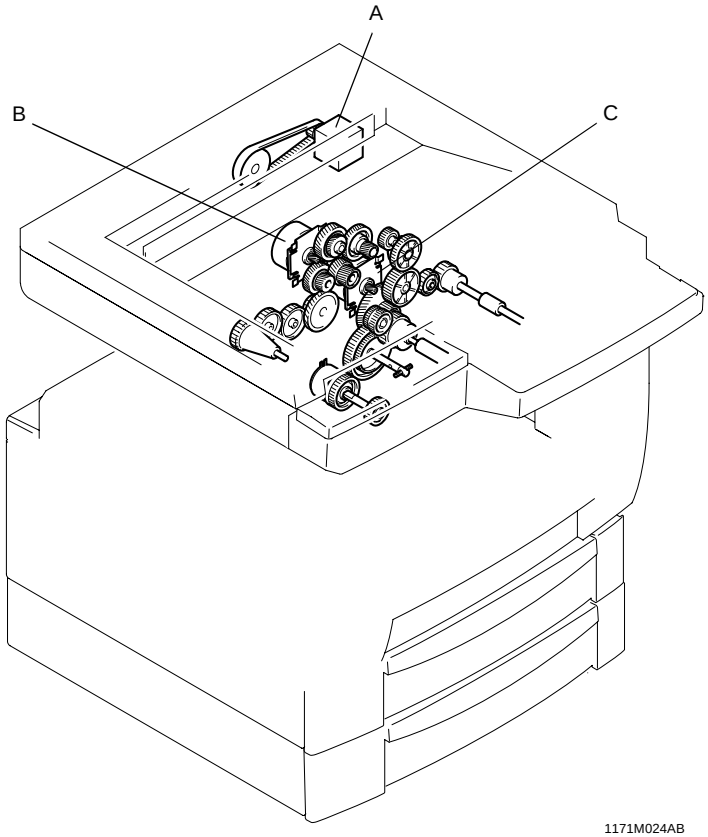

1171M024AB

A. Scanner Motor (M5)
   Drives the Scanner and 2nd/3rd Mirrors Carriage.
B. I/C Motor (M1)
   Drives the I/C Unit.
C. Main Motor (M2)
   Drives the Paper Take-Up Roll, Manual Feed Paper Take-Up Roll, Synchronizing Roller, Image Transfer Roller, and Fusing Unit.

1171SBM0400A

4 OPERATING SEQUENCE

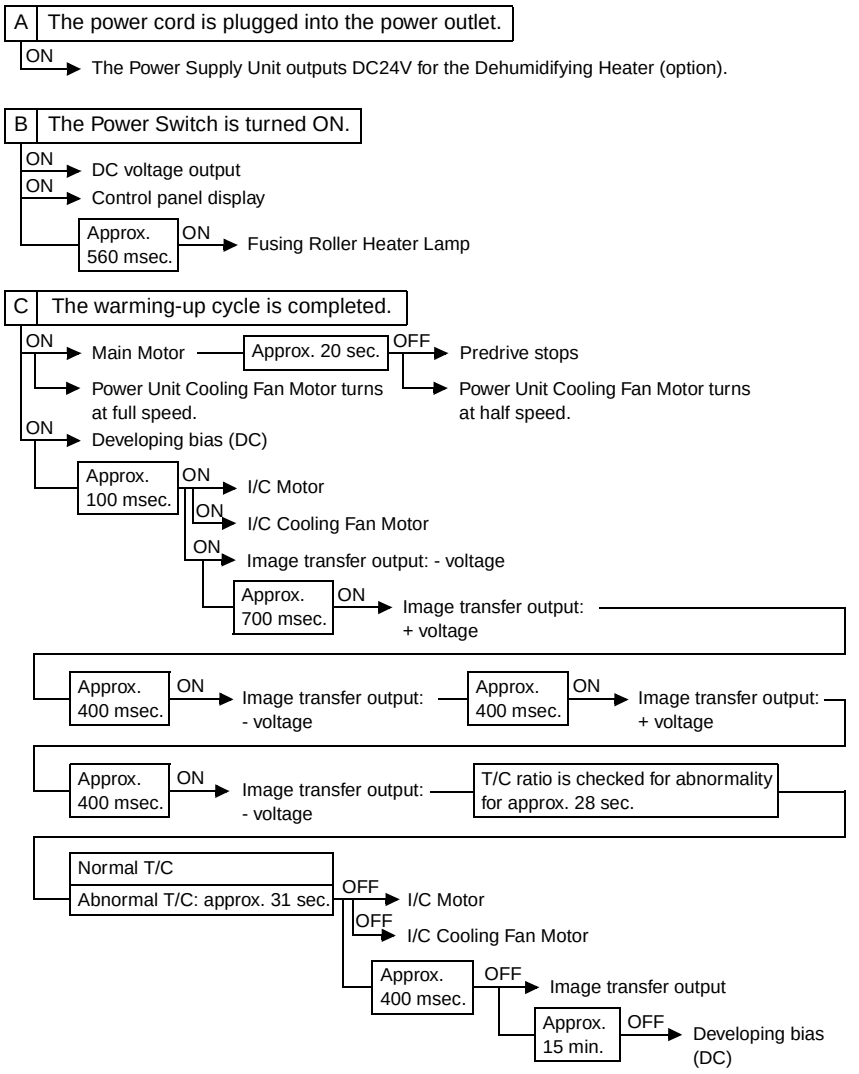

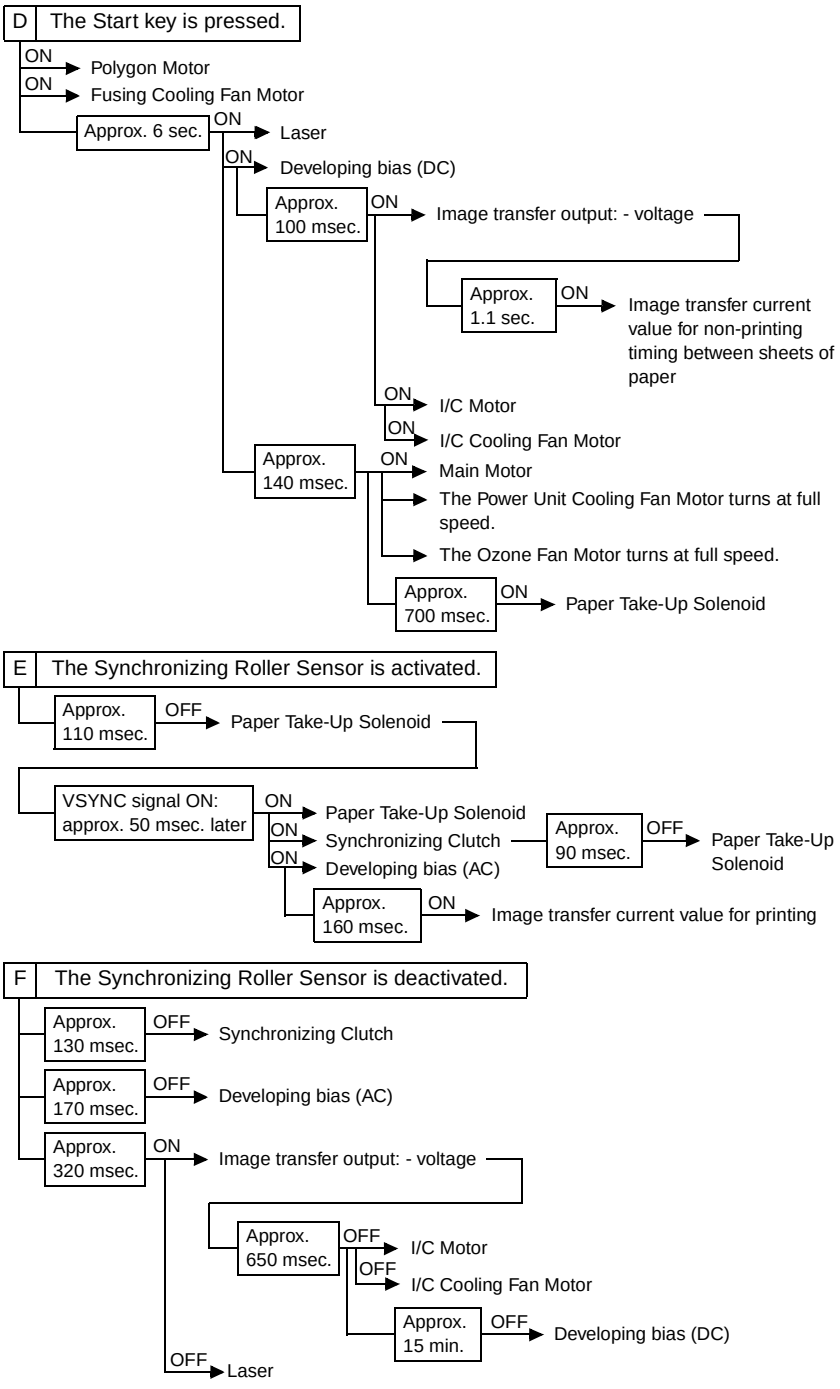
D
The Start key is pressed.
ON
Polygon Motor
ON
Fusing Cooling Fan Motor
Approx. 6 sec.
ON
Laser
ON
Developing bias (DC)
Approx. 100 msec.
ON
Image transfer output: - voltage
Approx. 1.1 sec.
ON
Image transfer current value for non-printing timing between sheets of paper
ON
I/C Motor
ON
I/C Cooling Fan Motor
Approx. 140 msec.
ON
Main Motor
The Power Unit Cooling Fan Motor turns at full speed.
The Ozone Fan Motor turns at full speed.
Approx. 700 msec.
ON
Paper Take-Up Solenoid
E
The Synchronizing Roller Sensor is activated.
Approx. 110 msec.
OFF
Paper Take-Up Solenoid
VSYNC signal ON: approx. 50 msec. later
ON
Paper Take-Up Solenoid
ON
Synchronizing Clutch
ON
Developing bias (AC)
Approx. 90 msec.
OFF
Paper Take-Up Solenoid
Approx. 160 msec.
ON
Image transfer current value for printing
F
The Synchronizing Roller Sensor is deactivated.
Approx. 130 msec.
OFF
Synchronizing Clutch
Approx. 170 msec.
OFF
Developing bias (AC)
Approx. 320 msec.
ON
Image transfer output: - voltage
Approx. 650 msec.
OFF
I/C Motor
OFF
I/C Cooling Fan Motor
Approx. 15 min.
OFF
Developing bias (DC)
OFF
Laser

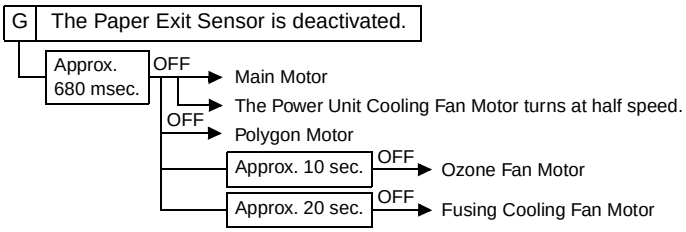
G
The Paper Exit Sensor is deactivated.
Approx. 680 msec.
OFF
Main Motor
The Power Unit Cooling Fan Motor turns at half speed.
OFF
Polygon Motor
Approx. 10 sec.
OFF
Ozone Fan Motor
Approx. 20 sec.
OFF
Fusing Cooling Fan Motor

1171SBM0500A

5 CPU OVERRUN MONITOR FUNCTION

- CPU Overrun Monitor Function (Watchdog Function)
  The watchdog function is a self-monitoring function that determines whether any of the CPUs mounted on the control board overrun.
- If this function detects that a CPU overruns, the copier automatically resets the CPU, thereby restarting the logic circuit and mechanism.
- Even if a copier CPU operates erratically due to electrical noise, therefore, the copier is able to recover from the faulty condition so that the number of visits made by the Tech. Rep. for CPU overrun can be minimized.

- Processing performed during watchdog function:
  If a faulty condition is detected, the copier resets the CPU and performs a restart sequence. Since this sequence of operations is performed even during a copy cycle, the copier detects a sheet or sheets of paper left inside it as a misfeed while it is being restarted.

1171SBM0600A

6 IMAGE STABILIZATION SYSTEM

- The following image stabilization controls are provided to ensure stabilized copy image.

Item	Purpose	Control
PC Drum temperature correction	To compensate for any change in ID due to changing PC Drum temperatures.	The I/C Thermistor is used to detect temperature and, according to the detected temperature, Vg/Vb is corrected.
PC Drum deterioration correction	To compensate for degraded sensitivity caused by a deteriorating PC Drum.	Corrects Vg according to the period of time during which the PC Drum has turned.

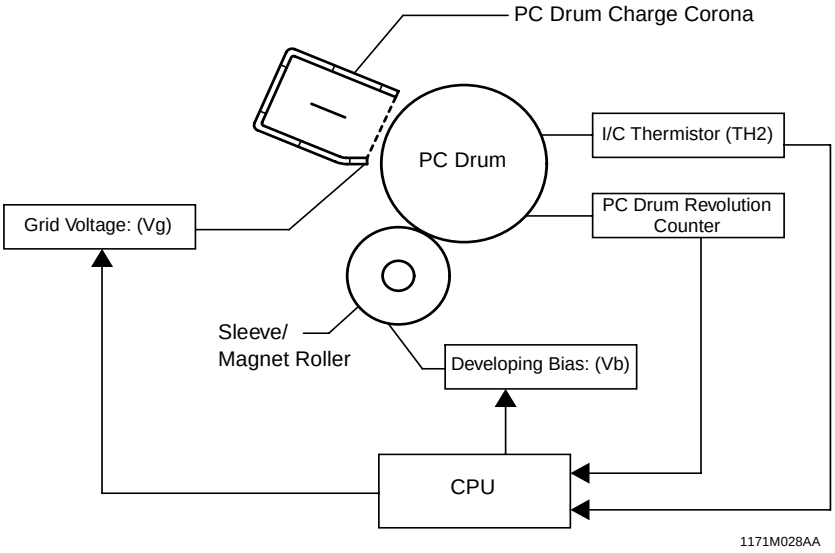

1171M028AA

1171SBM0700A

7 IMAGING CARTRIDGE (I/C)

- This copier employs an Imaging Cartridge ("I/C" in this manual) that contains a PC Drum, PC Drum Charge Corona, Developing Unit, and Cleaning Unit as one unit.

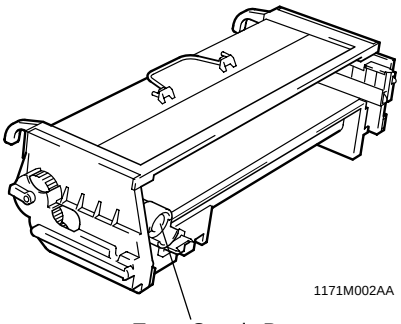

1171M002AA

Toner Supply Port

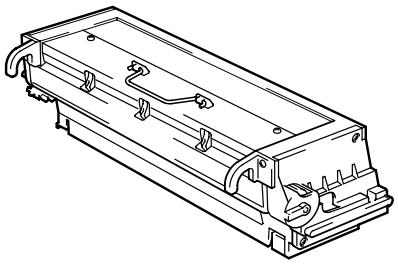

1171M001AA

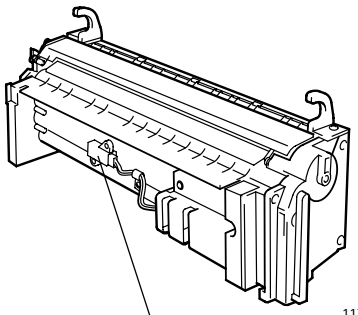

1171M003AA

ATDC Sensor (E1)

1171SBM0701A
7-1. I/C Drive Mechanism

- Drive from the I/C Motor is transmitted via a gear train to the PC Drum and Hopper.

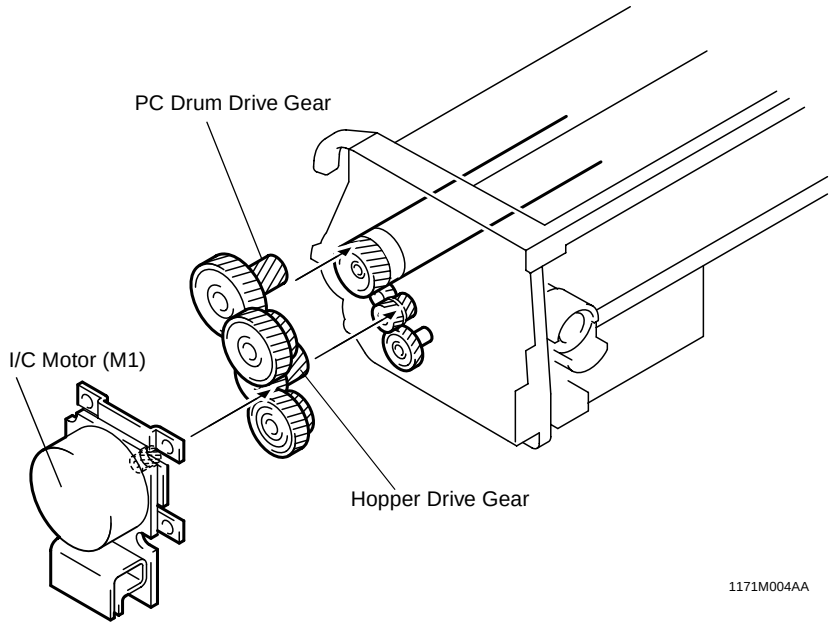

Electrical Component	Control Signal	ON	OFF
M1	PJ16A-3	L	H

1171SBM0702A
7-2. Identification and Life of I/C

- When the Start key is pressed or the Side Cover is opened and closed, the copier determines whether the I/C is new or one which has been used previously.
- The copier monitors the I/C life by storing in memory the period of time during which the PC Drum has turned. The data is cleared when a new I/C is installed in the copier.

1171SBM0800A

8 PC DRUM

- The PC Drum used in this copier is the organic photoconductor (OPC) type. The drum consists of an aluminum base coated with a charge generation layer and a charge transport layer.

Handling Precautions

Prolonged exposure to light can cause the photoconductor surface of the drum to suffer light fatigue, resulting in a loss of photosensitivity. If the I/C is removed from the copier, it should be wrapped in a soft, clean, opaque cloth or other protective covering to prevent exposure to light.

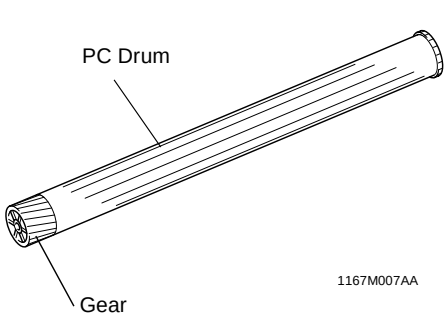

1167M007AA

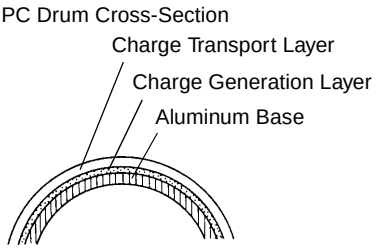

1139M007AA

- Grounding of the PC Drum
  The PC Drum ground point is located inside and at the front end of the I/C as viewed from the front of the copier and in constant contact with the Drum Holding Shaft. When the I/C is installed in the copier, the Drum Holding Shaft contacts the ground point. This provides for assured grounding of the PC Drum through the ground plate in the rear to the frame of the copier.

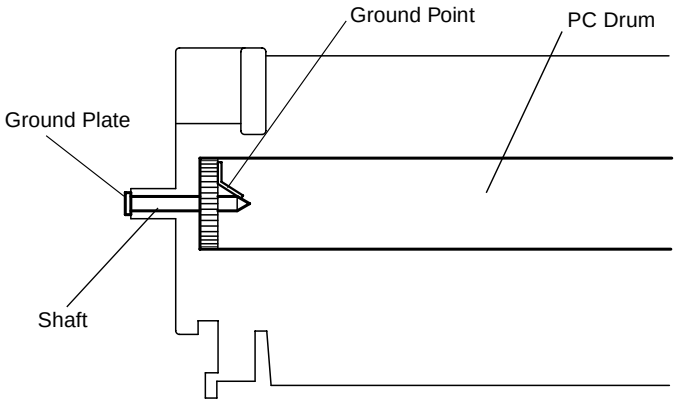

1171M005AA

1171SBM0900A

9 DRUM CHARGING

- A scorotron charger system generates a negative DC corona discharge onto the PC Drum surface. The grid mesh ensures uniform charging.
- The grid voltage (Vg) applied to the grid mesh is controlled by the constant voltage circuitry within the High Voltage Unit. It is varied through image stabilization control.
- To restrict ozone production, the copier uses a PC Drum Charge Corona with a comb electrode.

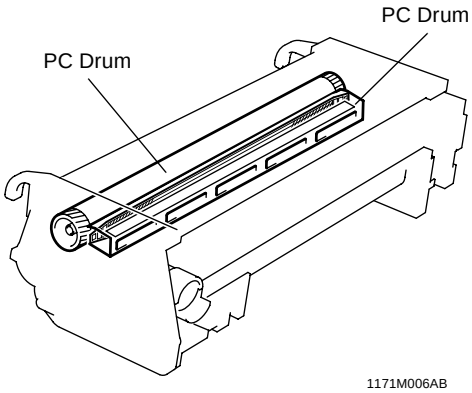

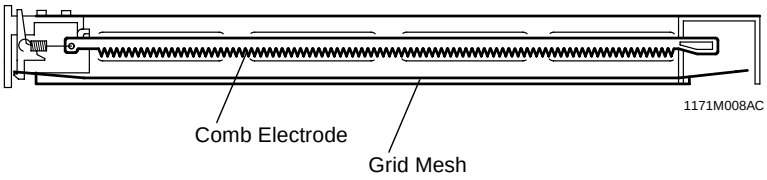

Electrical Component	Control Signal	ON	OFF
Drum charging output	PJ14A-3A	L	H

1171SBM1000A

10 ERASE LAMP

- Any potential remaining on the surface of the PC Drum is neutralized by both light from the Erase Lamp and a DC negative voltage applied by the Charge Neutralizing Sheet.
- The Charge Neutralizing Sheet applies a negative charge on the surface of the PC Drum which is positively charged by the Image Transfer Roller. A voltage of -820V is applied to the Charge Neutralizing Sheet from the High Voltage Unit. The Erase Lamp then illuminates the surface of the PC Drum to further neutralize it.
- The Erase Lamp consists of ten tungsten lamps.

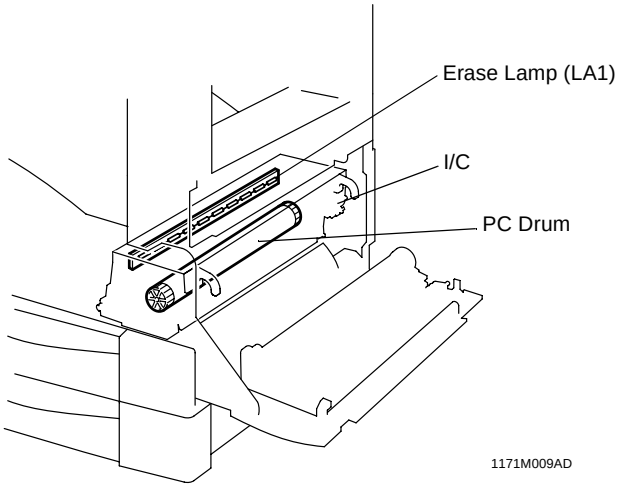

1171M009AD

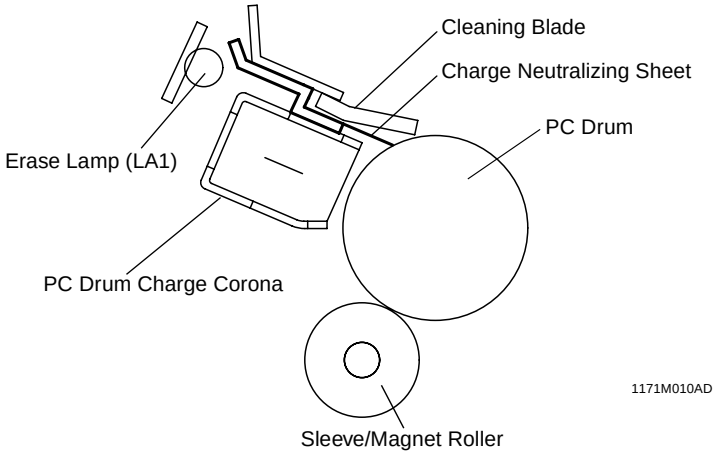

1171M010AD

Electrical Component	Control Signal	All lamps ON	Standby ON
LA1	PJ11A-6A	H	L

1171SBM1100A

11 IR SECTION

- Light reflected from the original passes through three mirrors and a lens to form a reduced image on the CCD Sensor as the Scanner is moved by the Scanner Motor. The CCD sensor converts the light pattern (image data) into an electrical image signal.
- The electrical image signal is then output to the MFB Board.

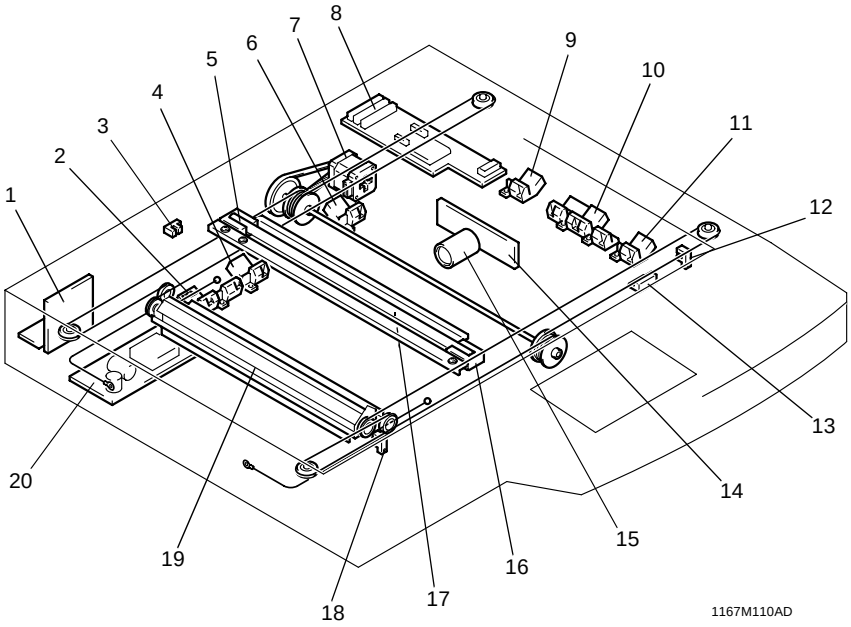

1. BCR Board (BCR)
2. Original Size Detecting Sensor 5 (UN8)
3. Original Cover Detecting Sensor (PC14)
4. Original Size Detecting Sensor 4 (UN7)
5. Exposure Lamp (LA2)
6. Original Size Detecting Sensor 6 (UN9)
7. Scanner Motor (M5)
8. HGB Board (HGB)
9. Original Size Detecting Sensor 1 (UN4)
10. Original Size Detecting Sensor 2 (UN5)
11. Original Size Detecting Sensor 3 (UN6)
12. Scanner Home Position Sensor 1 (PC12)
13. Size Reset Switch (S5)
14. CCD Board (CCD)
15. Lens
16. Scanner
17. 1st Mirror
18. Scanner Home Position Sensor 2 (PC13)
19. 2nd/3rd Mirrors Carriage
20. Inverter Board (INV)

1171SBM1101A

11-1. Exposure Section: Construction and Function

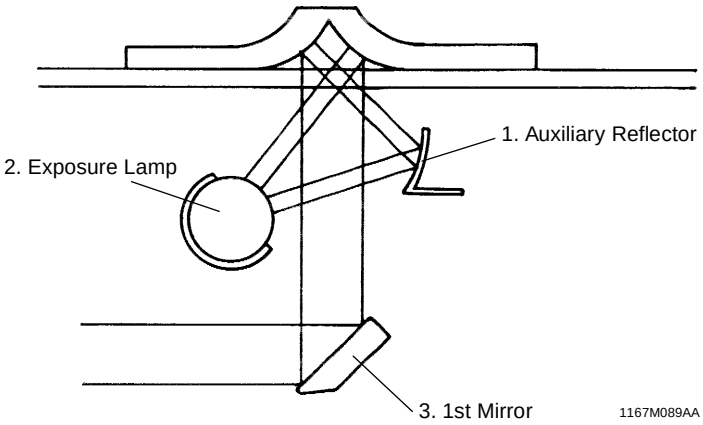

1. Auxiliary Reflector
   When a book or other bound original is copied, the paper in the area near the binding generally fails to come flush against the glass, so that the copy of these areas is generally too dark. The Auxiliary Reflector reduces this problem by reflecting light from the Exposure Lamp onto these areas of the original.
2. Exposure Lamp
   A fluorescent lamp is used to illuminate the original.
3. 1st Mirror
   Directs the reflected light from the original to the 2nd Mirror.

Electrical Component	Control Signal	ON	OFF
LA2	CN13BCR-1	L	H

1171SBM1102A

11-2. Image Processing Flow

- Image processing is made up of the following blocks.

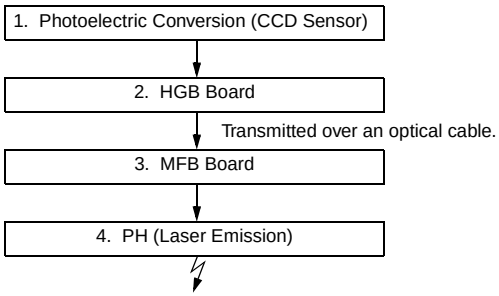

1. Photoelectric Conversion (CCD Sensor)
- Light reflected off the original is received through mirrors and lens by the CCD Sensor which, in turn, outputs the corresponding data to the HGB Board.

2. HGB Board
- After converting the data received from the CCD to an analog signal, the board converts it to 8-bit image data (A/D conversion). It further makes various corrections and outputs the resultant image data to the MFB Board over an optical cable.

3. MFB Board
- This board compresses the image data received from the HGB Board, stores it, and uncompresses it.
- The image memory has a standard capacity of 16MB and can be expanded up to 64MB (optional).

4. PH
- Emits a laser beam according to the image data provided by the MFB Board to expose the surface of the PC Drum.

1171SBM1103A
11-3. Original Size Detection

- When the copier is in Auto Paper or Auto Size, the sensors mounted in the IR receive light reflected off the original to allow the copier to determine the original size.

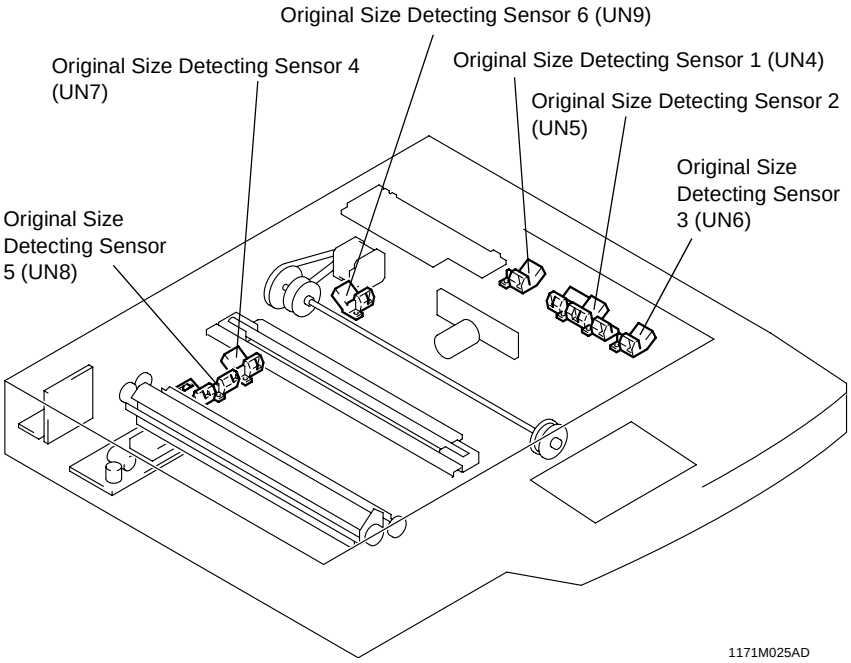

Electrical Component	Control Signal	Blocked	Unblocked
UN4	CN4BCR-4	L	H
UN5	CN5BCR-7	L	H
UN6	CN11HGB-4	L	H
UN7	CN6BCR-4	L	H
UN8	CN9HGB-1	L	H
UN9	CN8BCR-4	L	H

<Original Size Identification: Metric Areas>

Original Size	UN4	UN5			UN6	UN7	UN8		UN9
	S1	S2	S3	S4	S5	S6	S7	S8	S9
11" × 17"	❍	❍	❍	❍		❍	❍	❍	❍
A3L	❍	❍	❍	❍	❍	❍	❍	❍	❍
A4L	❍	❍				❍			❍
A4C	❍	❍	❍	❍	❍				❍
A5L									❍
B4L	❍	❍	❍			❍	❍	❍	❍
FLS	❍	❍				❍	❍		❍
Letter L	❍	❍							❍
Letter C	❍	❍	❍	❍					❍
Legal	❍	❍				❍	❍	❍	❍

❍: Detected by sensor; L: Lengthwise; C: Crosswise

NOTE
UN4, UN6 and UN8 are options.

<Original Size Identification: Inch Areas>

Original Size	UN5			UN6	UN7	UN8		UN9
	S2	S3	S4	S5	S6	S7	S8	S9
11" × 17"	❍	❍	❍		❍	❍	❍	❍
A3L	❍	❍	❍	❍	❍	❍	❍	❍
A4L	❍				❍			❍
A4C	❍	❍	❍	❍				❍
B4L	❍	❍			❍	❍	❍	❍
5-1/2" × 8-1/2"L								❍
FLS	❍				❍	❍		❍
B5C	❍	❍						❍
Letter L	❍							❍
Letter C	❍	❍	❍					❍
Legal	❍				❍	❍	❍	❍

❍: Detected by sensor; L: Lengthwise; C: Crosswise

NOTE
UN6, UN8 and UN9 are options.

1171SBM1104A

11-4. Original Size Detection Timing

The copier CPU affirms and resets the readings of the original size at the following timings.

- Takes size readings:
  When the Original Cover Detecting Sensor is deactivated.
- Affirms size readings:
  When the Start key is pressed with the Original Cover Detecting Sensor activated or the Size Reset Switch deactuated.
- Resets size readings:
  When the Size Reset Switch is deactuated.

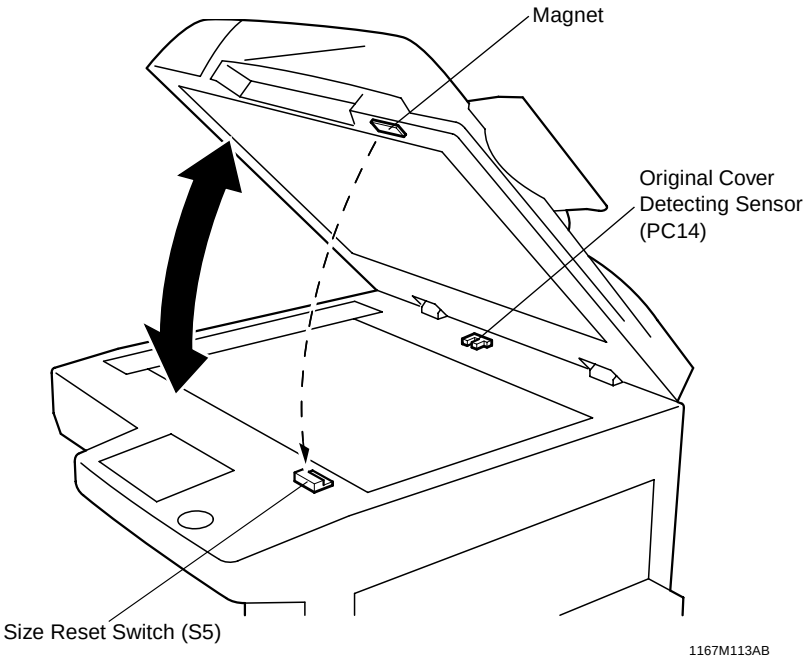

1167M113AB

Electrical Component	Control Signal	ON	OFF
S5	CN9BCR-2	L	H

Electrical Component	Control Signal	Unblocked	Blocked
PC14	CN10BCR-2	L	H

1171SBM1105A

11-5. Scanner and 2nd/3rd Mirrors Carriage Moving Mechanism

<Scanner>

- During a scan, the Scanner projects an even amount of light from the Exposure Lamp onto the entire surface of the original. The light is reflected from the original to the 1st Mirror of the scanner and then to the 2nd and 3rd Mirrors.
- The Scanner is driven by the Scanner Motor and front and rear Scanner Drive Cables.
- Scanner speed is determined by the set zoom ratio in reference to the full size mode.
- The Scanner is at home position when Scanner Home Position Sensor 1 is blocked. This position serves as the reference for the scan motion.
- Scanner Home Position Sensor 2 determines the home position of the Scanner when AF-7 is used.

<2nd/3rd Mirrors Carriage>

- The 2nd and 3rd Mirrors are mounted to their holder at right angles to each other. They direct the light reflected off the 1st Mirror through the lens to the CCD.
- The 2nd/3rd Mirrors Carriage is also moved by the Scanner Drive Cables and pulleys driven by the Scanner Motor. It travels at a speed half that of the Scanner, thereby keeping constant the optical path length between the Original Glass and lens.

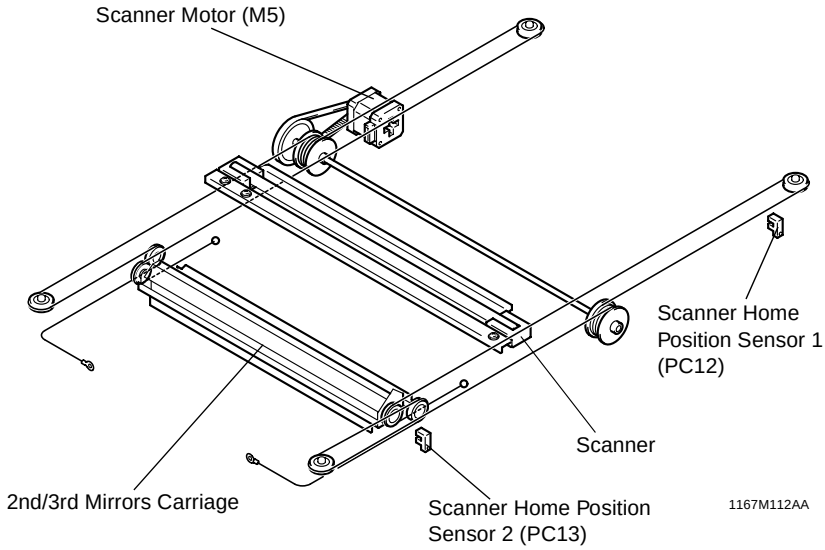

Electrical Component	Control Signal	Forward Rotation	Backward Rotation
M5	CN3BCR-1~3	Pulse output	

Electrical Component	Control Signal	Blocked	Unblocked
PC12	CN11BCR-1	L	H
PC13	CN12BCR-1	L	H

1171SBM1200A

12 PH SECTION

- Based on the image data output from the MFB Board, the LD (laser diode) is activated and the corresponding light strikes the surface of the PC Drum.

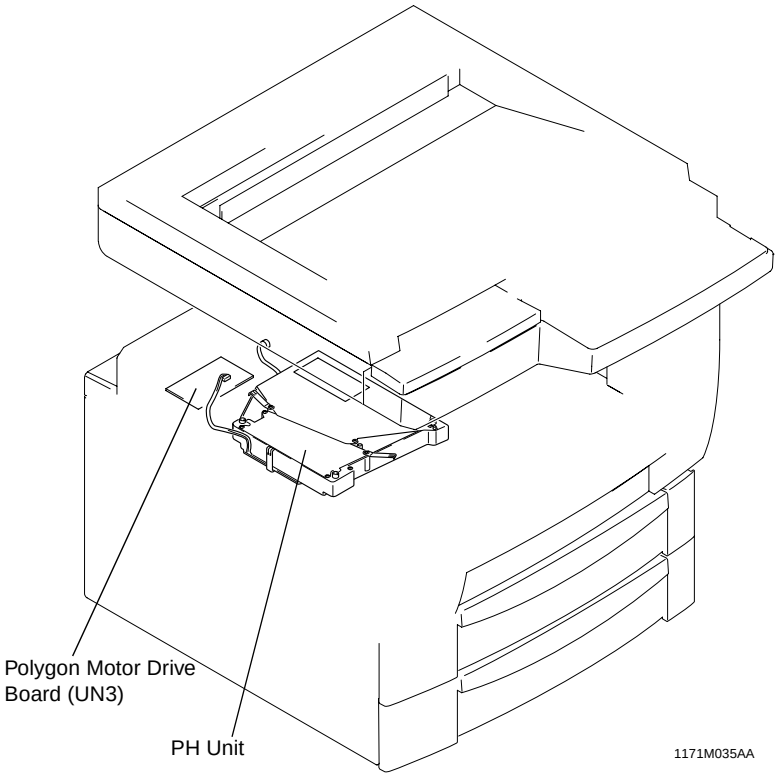

1171SBM1201A

12-1. PH Components

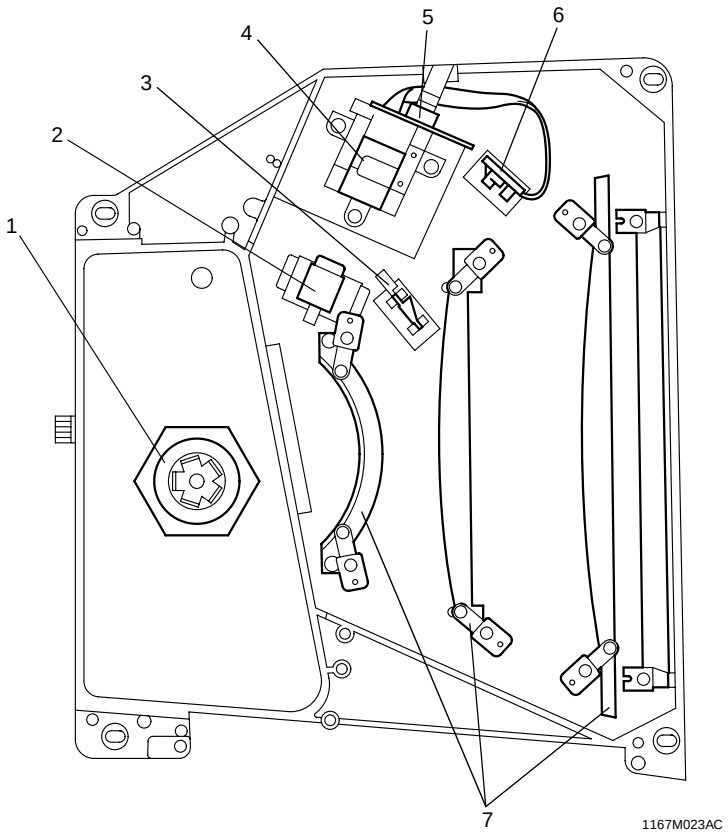

1. Polygon Motor (M10)
2. Cylindrical Lens
3. SOS Mirror
4. Collimator Lens
5. Laser Diode Board (PWB-B)
6. SOS Sensor
7. f-θ Lens

Electrical Component	Control Signal	ON	OFF
M10	PJ8A-3	L	H

1171SBM1202A

12-2. Laser Emission Timing (SOS Signal)

- The signal output from the Master Board triggers the firing of the laser. The laser beam travels to the Polygon Mirror, lens, and SOS Mirror to eventually hit the SOS Sensor, which generates an SOS signal.
- The SOS signal determines the laser emission timing for each line in the main scanning direction.

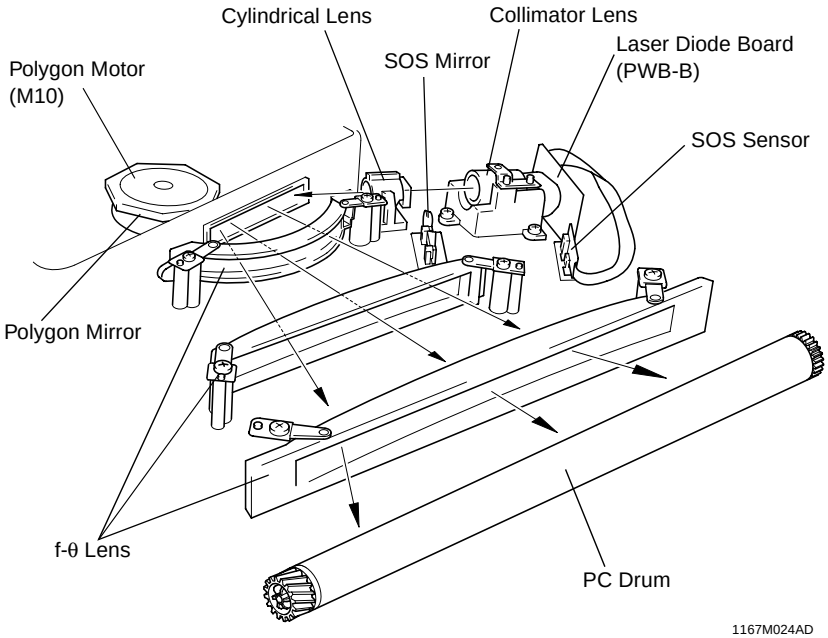

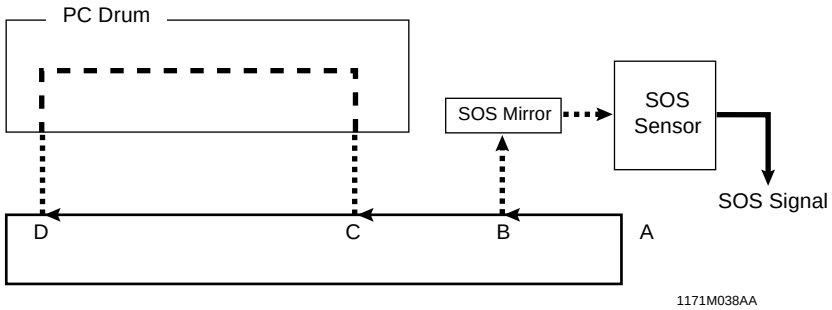

A to B: LD activation
B to C: LD OFF
C to D: Laser beam exposure area according to the image data

1171SBM1300A

13 DEVELOPING UNIT

- The Toner Conveying Rollers mix the toner and carrier particles together and carry the toner/carrier mixture up to the Sleeve/Magnet Roller. The magnetic brush formed on the surface of the roller allows the toner to come into contact with the charges on the surface of the PC Drum, thus forming an electrostatic latent image.

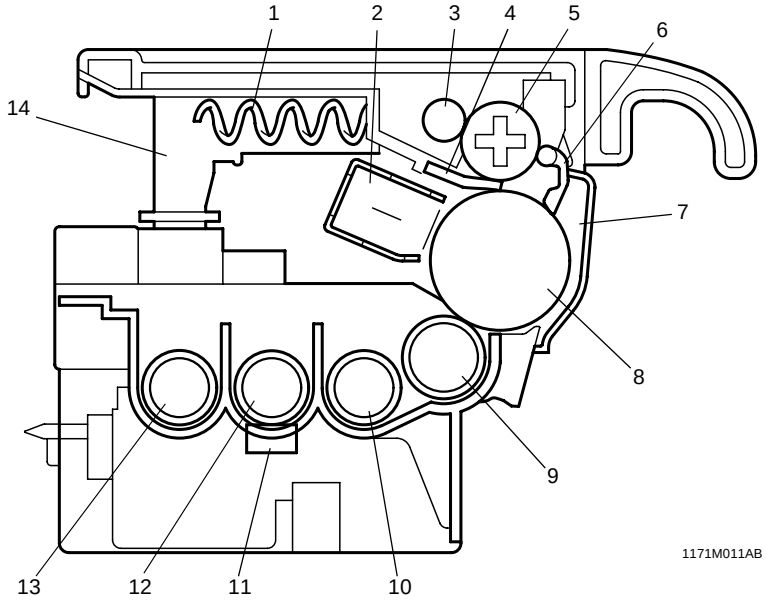

1. Spent Toner Recycling Coil
2. PC Drum Charge Corona
3. Spent Toner Feed Roller 2
4. Cleaning Blade
5. Spent Toner Feed Roller 1
6. PC Drum Paper Separator Finger
7. PC Drum Protective Shutter
8. PC Drum
9. Sleeve/Magnet Roller
10. 1st Toner Conveying Roller
11. ATDC Sensor (E1)
12. 2nd Toner Conveying Roller
13. 3rd Toner Conveying Roller
14. Spent Toner Recycling Duct

1171SBM1301A

13-1. Sleeve/Magnet Roller

- This copier employs the MT-HG system with a Sleeve/Magnet Roller having the following magnetic characteristics.
- Turning of the sleeve surrounding the Magnet Roller ensures that fresh developer from the Developer Mixing Chamber is always being conveyed to the point of development with respect to the PC Drum.

N1	:	The point of development with the maximum magnetic flux density which ensures that the carrier is firmly held onto the Sleeve Roller when toner is attracted to the latent image.
S1, N2	:	The magnetic flux density between these two poles is made low to ensure that the developer remaining on the surface of the Sleeve Roller is smoothly recycled. They also prevent developer from scattering.
N3	:	The developer brush is formed by this pole and its height is moderated before the brush is regulated by the Doctor Blade.
S2a	:	This pole ensures that the developer is conveyed to the point of development over the wide interval between N3 and N1.
S2b	:	If developer is compacted and clogs at the Doctor Blade and, as a result, part of the surface of the Sleeve/Magnet Roller is not covered with developer, the nearby developer around this pole with a weak magnetic force goes to those uncovered areas. This helps prevent white lines from occurring on the copy.

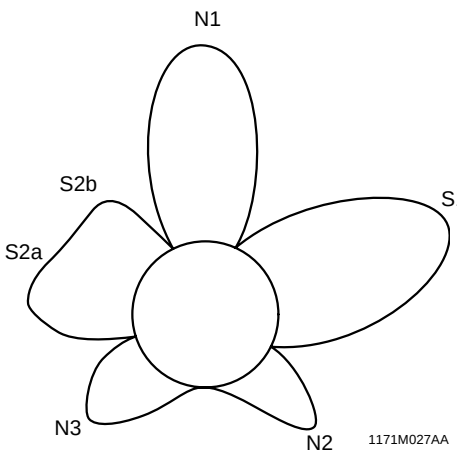

1171M027AA

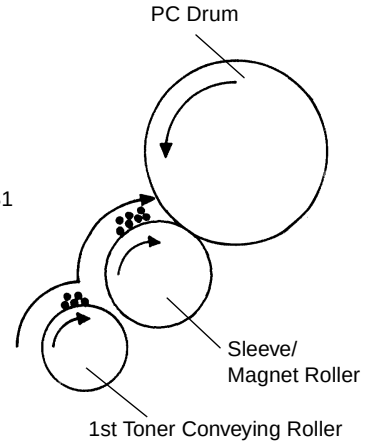

1167M076AB

1171SBM1302A

13-2. Developing Bias

- The amount of toner attracted onto the surface of the PC Drum is controlled by varying the developing bias voltage.
- As the PC Drum deteriorates and its photoconductive layer begins to wear, it becomes more sensitive to the increase in the amount of toner. As a countermeasure against this problem, the developing bias voltage is automatically switched according to the PC Drum temperature, thereby stabilizing the image quality level.

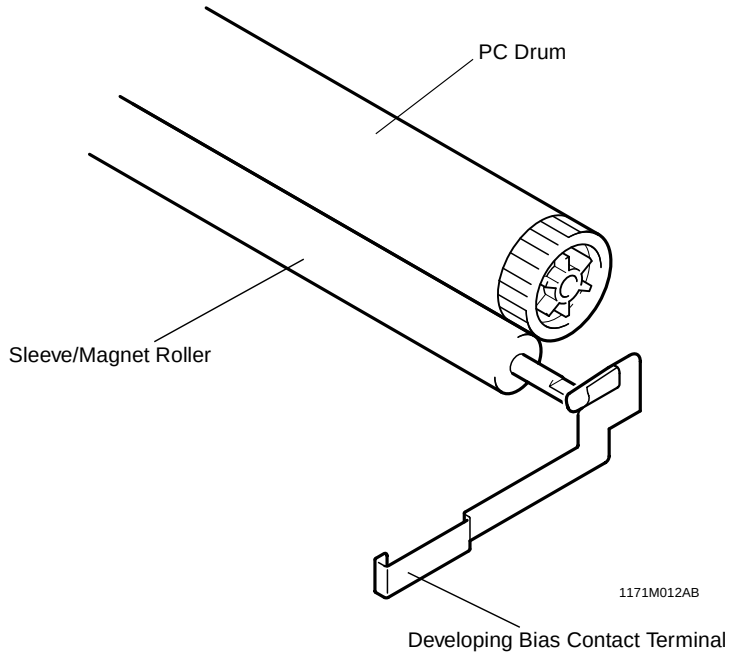

Electrical Component	Control Signal	ON	OFF
Vb	PJ14A-1A	L	H

1171SBM1303A

13-3. ATDC Sensor

- The ATDC Sensor automatic adjustment is made when a new I/C is installed in the copier. Toner replenishing control is thereafter controlled as detailed in the following.

1. ATDC Sensor Automatic Adjustment

- The ATDC Sensor is automatically adjusted when a new I/C is loaded in the copier. During this sequence, the copier reads the sensor output value and sets it as the reference. This reference value is stored in memory and used until the I/C reaches its service life.

2. Toner Replenishing Control

- While the I/C Motor is turning, the ATDC Sensor samples T/C and, according to the readings, the copier provides the following controls.

T/C Ratio (%)	Sampling Data (V)	Control Details
More than 19	Less than 1.41	Defective ATDC Sensor
14 to 19	2.32 to 1.41	Toner replenished for 0 msec.
13 to 14	2.50 to 2.32	Toner replenished for 54 msec. at intervals of approx. 1 sec.
12 to 13	2.68 to 2.50	Toner replenished for 150 msec. at intervals of approx. 1 sec.
10 to 12	3.10 to 2.68	Toner replenished for 378 msec. at intervals of approx. 500 msec.
7 to 10	3.92 to 3.10	Passed onto the T/C recovery mode.
Less than 7	More than 3.92	Defective ATDC Sensor

✻ Toner replenishment represents the operation of the Sub Hopper Toner Replenishing Motor.

3. Toner Empty Control (T/C Recovery Mode)

- When the control is passed onto the T/C recovery mode, the Sub Hopper Toner Replenishing Motor is energized to replenish the supply of toner into the Developing Unit and, if T/C is recovered to a level of 14% or higher (2.32V or less) within 150 sec., it resets the toner-empty condition.

1171SBM1304A

13-4. Sub Hopper Toner Replenishing Mechanism

- Toner is replenished from the Sub Hopper to the Developing Unit by turning the Sub Hopper Toner Replenishing Motor for the period of time controlled by the ATDC output voltage (T/C).

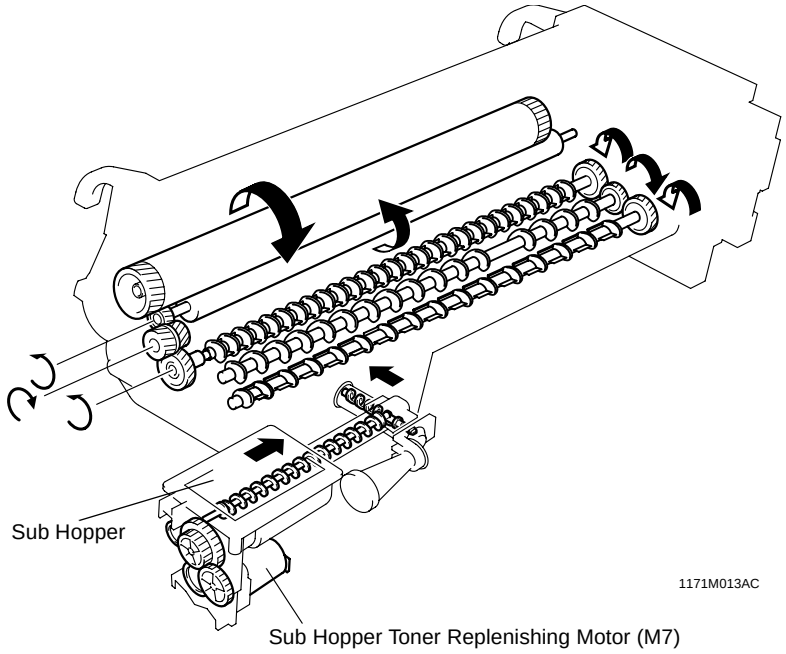

Electrical Component	Control Signal	ON	OFF
M7	PJ11A-8A	DC24V	L

1171SBM1305A

13-5. Sub Hopper Toner Empty Detecting Mechanism

- A toner-empty condition in the Sub Hopper is detected by the Magnet Lever that moves up and down as the Sub Hopper Toner Agitating Lever turns and actuates and deactuates the Sub Hopper Toner Empty Switch.
- While the amount of toner in the Sub Hopper is more than the predetermined amount, the Magnet Lever rests on the toner, keeping the Sub Hopper Toner Empty Switch deactuated even when the Sub Hopper Toner Agitating Lever turns. As toner is consumed, the Magnet Lever lowers to eventually actuate the Sub Hopper Toner Empty Switch, at which timing the copier detects a toner-empty condition in the Sub Hopper.

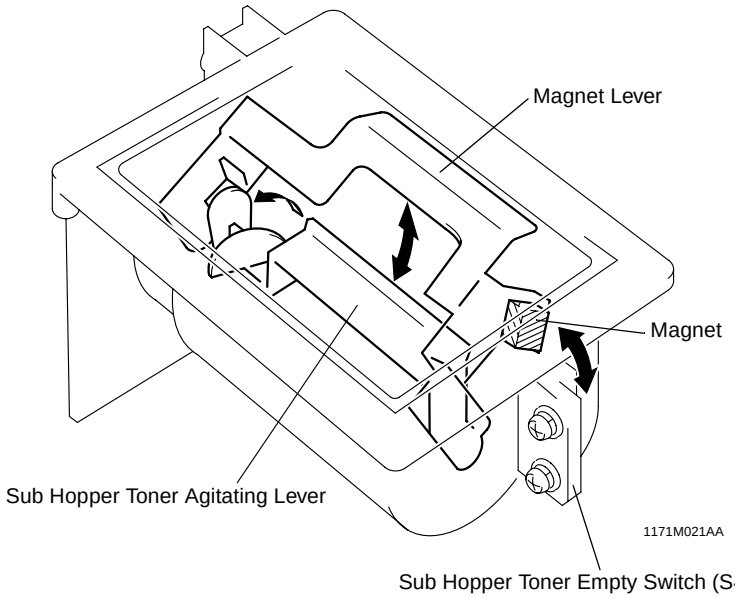

Electrical Component	Control Signal	ON	OFF
S4	PJ11A-7B	L	H

1171SBM1306A

13-6. Main Hopper Toner Replenishing Mechanism

- When a toner-empty condition in the Sub Hopper is detected, the Main Hopper Toner Replenishing Motor is energized to turn the Toner Bottle, thereby supplying toner from the Main Hopper to the Sub Hopper.
- The Toner Bottle Home Position Sensor mounted on the coupling ensures that the Toner Supply Port in the Toner Bottle is positioned at the top whenever the bottle is stopped.
- The Toner Bottle Cover Sensor detects whether the Toner Bottle Cover is open. If the cover is open, the copier does not authorize the initiation of a new copy cycle. If the cover is opened during a copy cycle, the copier interrupts the cycle.

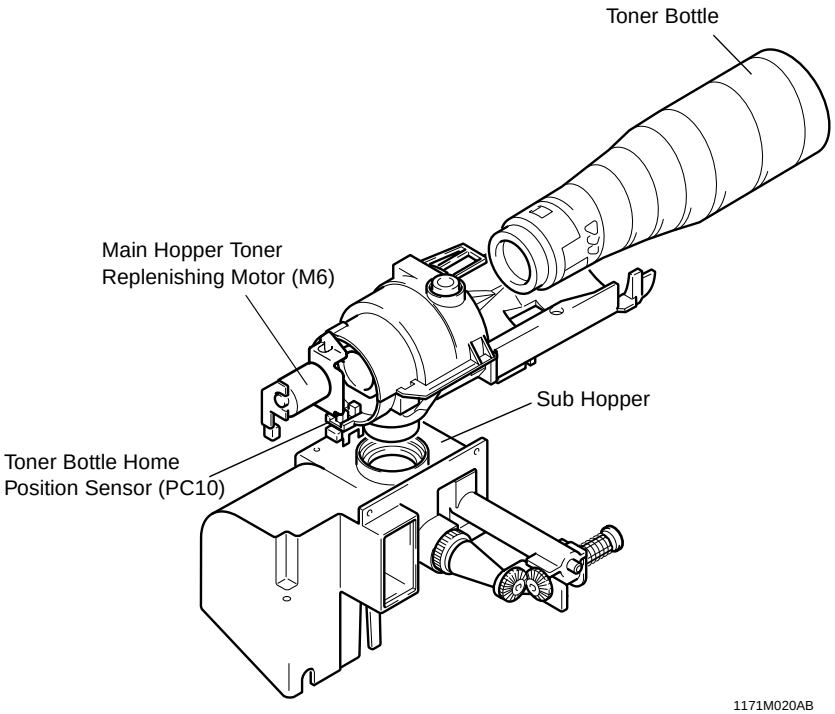

1171M020AB

Electrical Component	Control Signal	ON	OFF
M6	PJ11A-4A	DC24V	L

Electrical Component	Control Signal	Unblocked	Blocked
PC10	PJ11A-2B	L	H

1171SBM1307A
13-7. I/C Cooling Fan Motor

- The I/C Cooling Fan Motor prevents the temperature inside the copier (around the entire I/C) from rising inordinately.

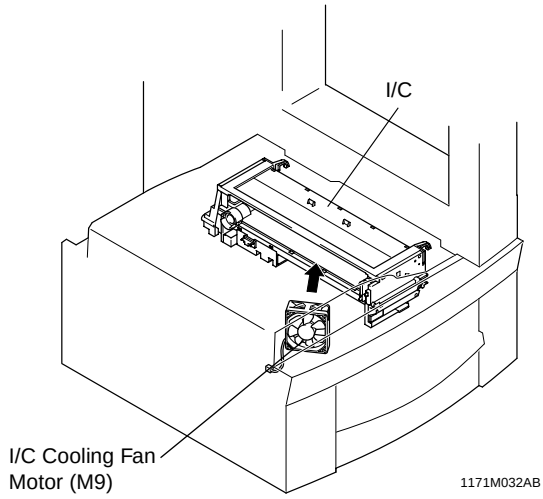

Electrical Component	Control Signal	ON	OFF
M9	PJ18A-10	DC24V	L

1171SBM1308A
13-8. Ozone Fan Motor

- Ozone produced by the PC Drum Charge Corona is absorbed by the Ozone Filter from the air being drawn out of the copier by the Ozone Fan Motor.

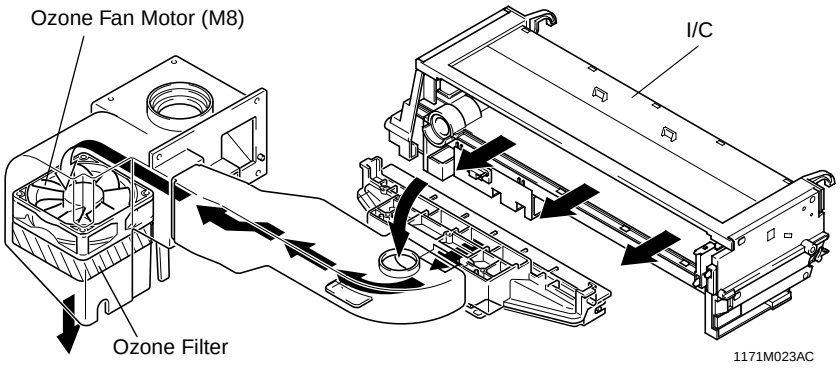

Electrical Component	Control Signal	ON	OFF
M8	PJ11A-1A	DC24V	L

1171SBM1400A

14 PAPER TAKE-UP/FEED SECTION

NOTE

- For the details of the 2nd Cassette (500-Sheet Cassette), see the relevant option service manual.

- This copier employs the Multi-Purpose (MP) Cassette whose capacity is about 250 sheets (about 20 sheets for special paper).

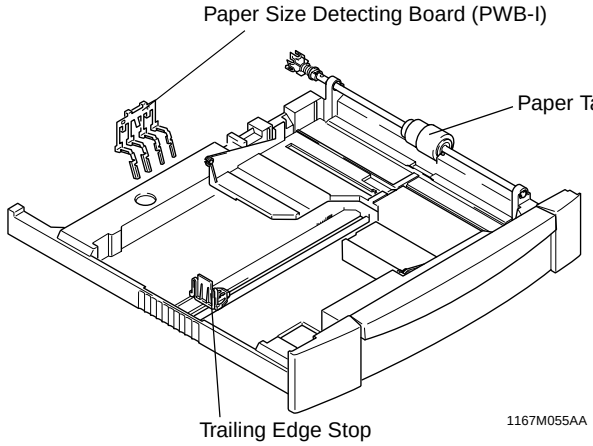

1171SBM1401A

14-1. MP Cassette Paper Lifting Plate

- The Paper Lifting Plate installed in the MP Cassette is spring-loaded to push the paper stack upward. When the cassette is slid into the copier, the lever located on the bottom of the cassette and used to lock down the Paper Lifting Plate is pushed and unlocked, allowing the Paper Lifting Plate to push the paper stack upward.

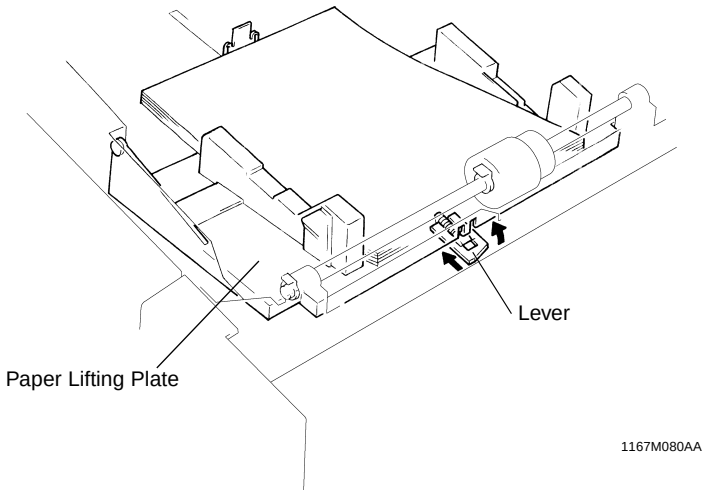

1171SBM1402A

14-2. MP Cassette-in-Position Detection

- When the MP Cassette is slid into the copier, the light blocking plate located in the rear of the cassette blocks the Cassette Set Sensor and the copier determines that the MP Cassette has been slid into position.

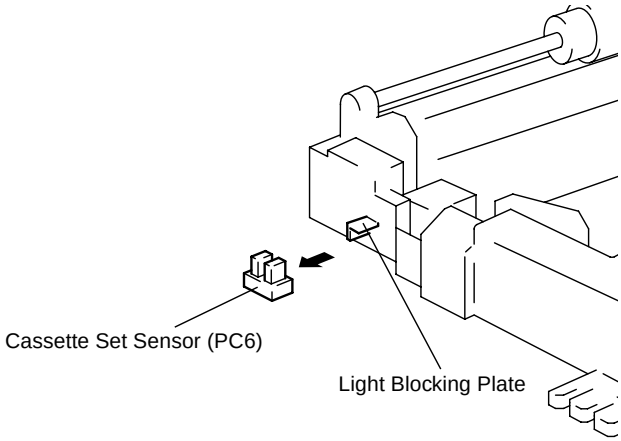

1167M052AB

Electrical Component	Control Signal	Unblocked	Blocked
PC6	PJ13A-5B	H	L

1171SBM1403A

14-3. MP Cassette Paper Empty Detection

- Two sensors are used in this copier: the Paper Empty Sensor detects a paper-empty condition, while the Paper Near-Empty Sensor detects a paper near-empty condition.

Paper Near-Empty Detection:

- A paper near-empty condition is detected as the paper is consumed and when the Near-Empty Lever lowers to eventually block the sensor (L).
- At this time, the MP Cassette Paper Empty LED starts blinking.
- A paper-empty condition results when about 50 more sheets of paper are used after the near-empty condition has been detected.

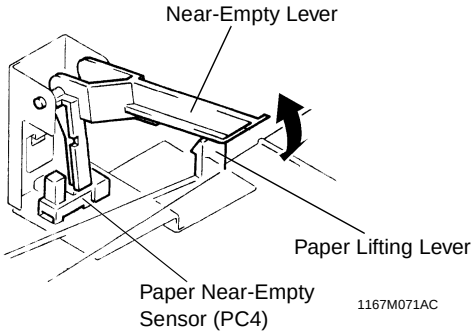

Paper Empty Detection:

- A paper-empty condition is detected as the paper is consumed and when the Empty Lever lowers to eventually block the sensor (L).
- At this time, the MP Cassette Paper Empty LED lights up steadily.

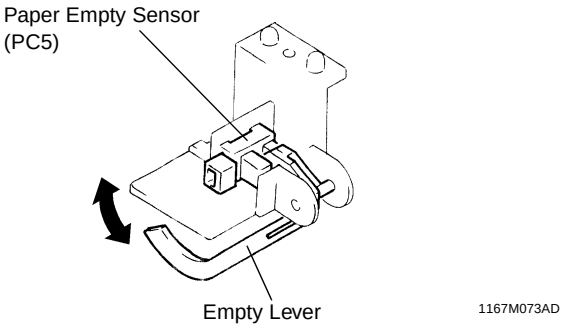

Electrical Component	Control Signal	Unblocked	Blocked
PC4	PJ14A-13A	H	L
PC5	PJ13A-2B	H	L

1171SBM1404A

14-4. MP Cassette Paper Size Detection

- The Paper Size Detecting Board detects the length of the paper (FD).
- A lever is connected to the Trailing Edge Stop of the cassette and, as the stop is slid to the size of the paper loaded in the cassette, the lever is moved to turn ON and OFF the size detecting switches mounted on the copier side.
- The control panel settings are necessary for any paper size other than the following.

Paper Size Detecting Switches (PWB-I)				Paper Size
1	2	3	4	
ON	OFF	OFF	OFF	A3L, 11”×17”L
OFF	OFF	OFF	OFF	B4L, 8-1/2”×14”L
OFF	ON	ON	ON	A4L
ON	ON	ON	ON	B5L, 8-1/2”×11”L
ON	ON	OFF	OFF	A4C/A5L
ON	OFF	OFF	ON	B5C
OFF	ON	OFF	OFF	A5C
ON	ON	ON	OFF	8-1/2”×11”C

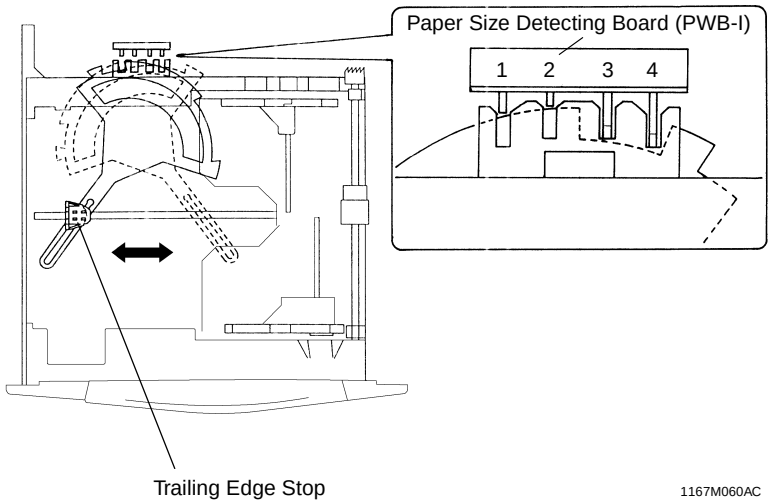

Electrical Component	Control Signal	ON	OFF
PWB-I (1)	PJ14A-1B	L	H
PWB-I (2)	PJ14A-2B	L	H
PWB-I (3)	PJ14A-3B	L	H
PWB-I (4)	PJ14A-4B	L	H

1171SBM1405A

14-5. Paper Take-Up Mechanism

- Drive from the Main Motor is transmitted to the Paper Take-Up Clutch (spring clutch) and, by energizing the Paper Take-Up Solenoid, the Paper Take-Up Roll is turned.
- The paper separating mechanism employs a Paper Separator Pad.

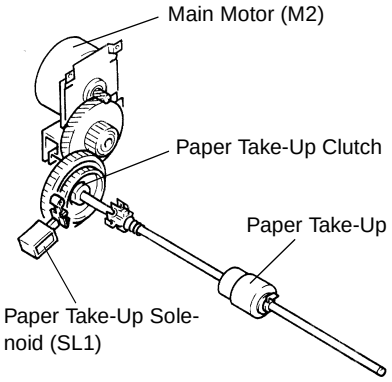

1167M038AB

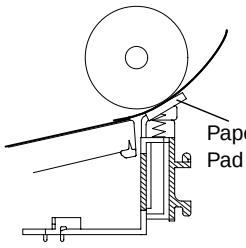

1167M054AB

1171SBM1406A

14-6. Manual Bypass Tray

1. Construction of the Manual Bypass Tray

- Drive from the Main Motor is transmitted to the Manual Paper Feed Take-Up Clutch and, by energizing this clutch, the Manual Feed Paper Take-Up Roll is turned.

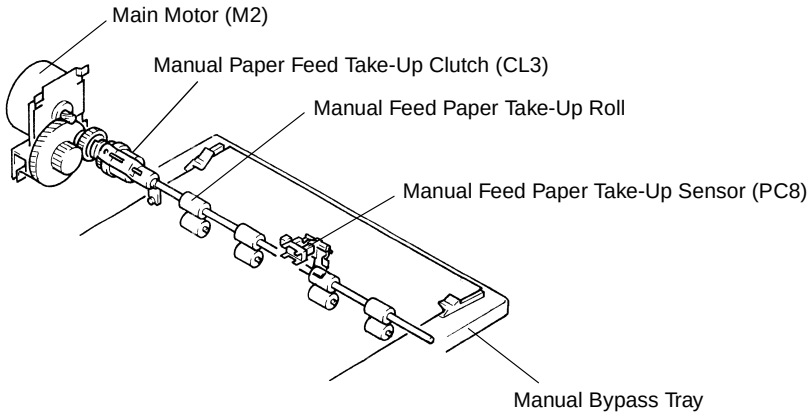

1167M067AC

Electrical Component	Control Signal	ON	OFF
M2	PJ16A-1	L	H
SL1	PJ13A-13B	L	H
CL3	PJ4A-9A	L	H

2. Manual Feed Paper Take-Up Detection

- The Manual Feed Paper Take-Up Sensor detects a sheet of paper that is fed via the Manual Bypass Tray.
- The size and type of the paper for manual feed are set on the control panel.

<Paper Present: Unblocked (H)>

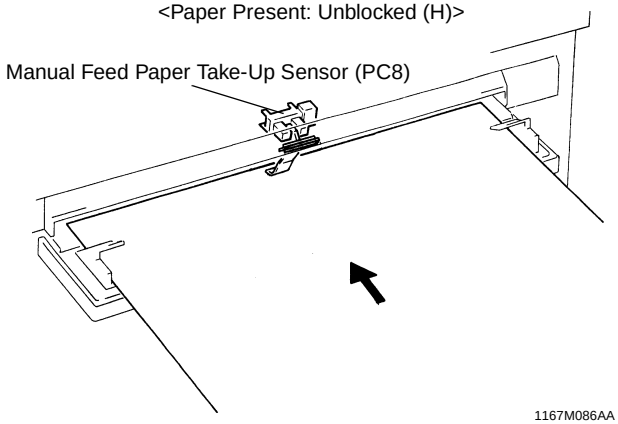

1167M086AA

<Paper Not Present: Blocked (L)>

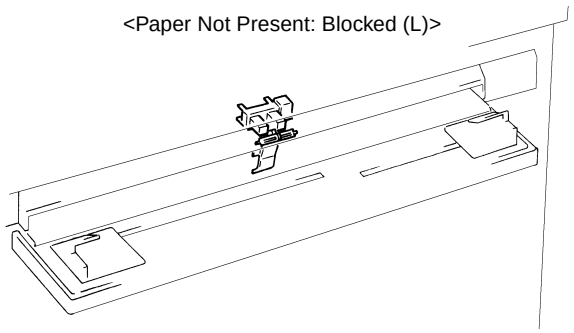

1167M085AA

Electrical Component	Control Signal	Unblocked	Blocked
PC8	PJ4A-7B	H	L

1171SBM1407A

14-7. Paper Take-Up Retry Mechanism

- To minimize the occurrence of a paper misfeed due to a slippery Paper Take-Up Roll, the Paper Take-Up Solenoid is energized a second time if a sheet of paper fails to reach the Synchronizing Roller Sensor within a given period of time after the solenoid has been energized first.
- A paper take-up misfeed results if the sheet of paper does not reach the Synchronizing Roller Sensor even after two paper take-up sequences.

1171SBM1500A

15 SYNCHRONIZING ROLLERS

- The Synchronizing Rollers of this copier are located inside the Right Door. They are easily accessible for misfeed clearing by just opening the Right Door.

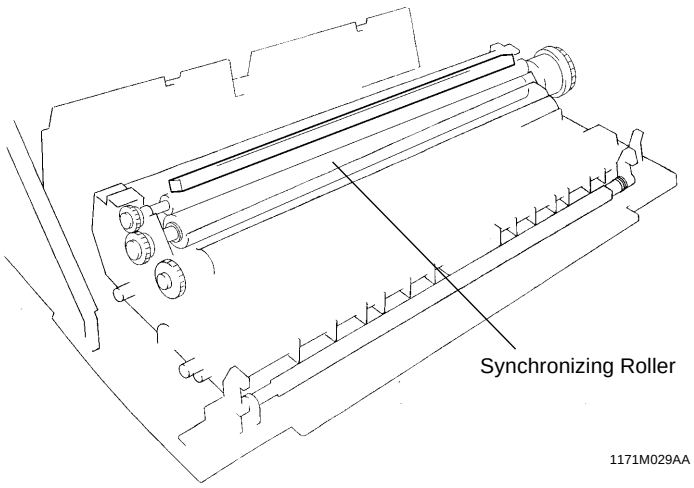

1171SBM1501A

15-1. Synchronizing Roller Drive Mechanism/Control

- The Synchronizing Rollers are turned by the drive from the Main Motor transmitted to the Synchronizing Clutch.
- The rollers are started when the Synchronizing Clutch is deenergized.

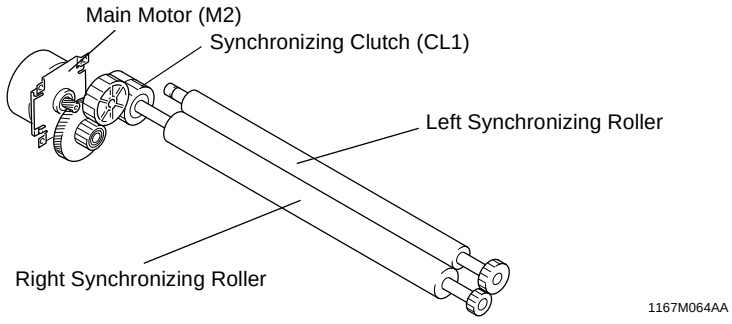

Electrical Component	Control Signal	ON	OFF
M2	PJ16A-1	L	H
CL1	PJ13A-2A	L	H

1171SBM1502A

15-2. Paper Dust Remover

- The Paper Dust Remover is installed so that it makes contact with the Left Synchronizing Roller. It is intended for preventing paper dust from sticking to the surface of the PC Drum.
- As the roller turns in contact with the Paper Dust Remover, triboelectric charging occurs, which attracts paper dust from the paper that passes between the two rollers and the dust is, in turn, transferred onto the Paper Dust Remover.

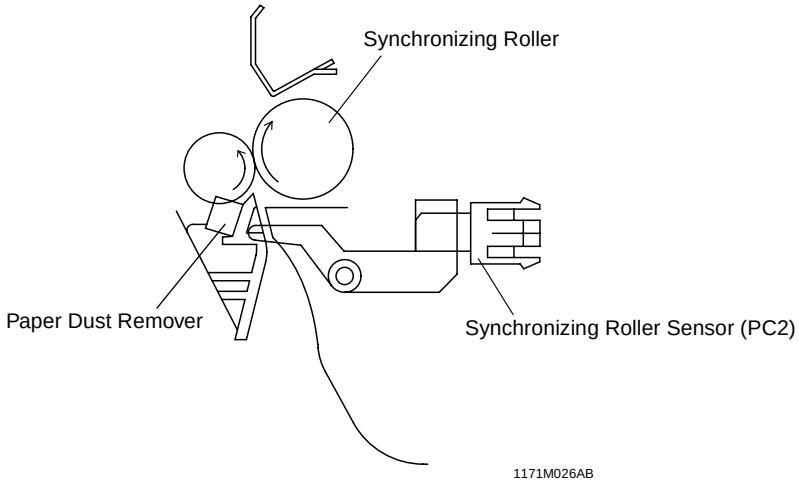

1171M026AB

1171SBM1600A

16 IMAGE TRANSFER AND PAPER SEPARATION

Image Transfer

- This copier employs an Image Transfer Roller to transfer the image to the paper. The High Voltage Unit applies an image transfer current to this roller. To ensure that image transfer efficiency is stabilized, the image transfer current is automatically varied according to the paper size, paper type, and the B/W ratio of the original.
- To prevent toner from sticking to the Image Transfer Roller, an image transfer voltage of -975V is applied to the roller for cleaning.

Paper Separation

- To neutralize any charge left on the paper, to which the image has been transferred, the High Voltage Unit applies a voltage of -1200V via a ground plate to the Charge Neutralizing Plate.

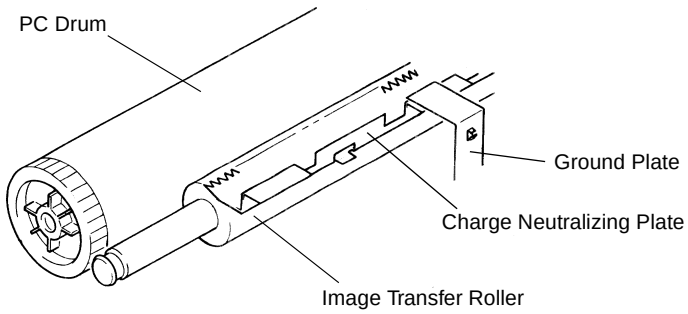

1167M082AA

Electrical Component	Control Signal	ON	OFF
Image transfer output	PJ14A-2A	L	H

1171SBM1700A

17 PC DRUM PAPER SEPARATOR FINGERS

- The three PC Drum Paper Separator Fingers fitted to the I/C mechanically separate paper from the surface of the PC Drum to ensure good and positive paper separation.

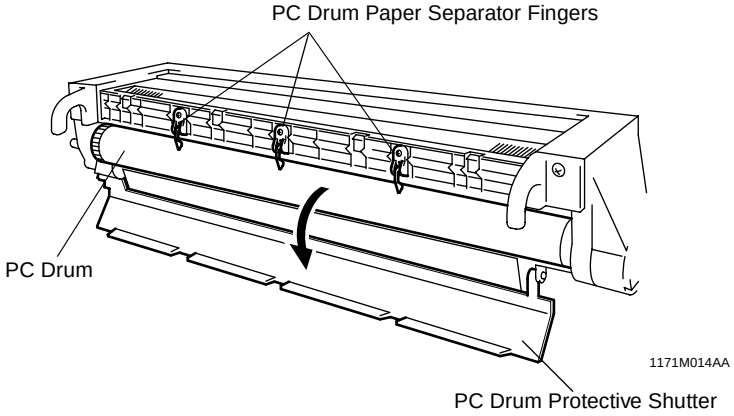

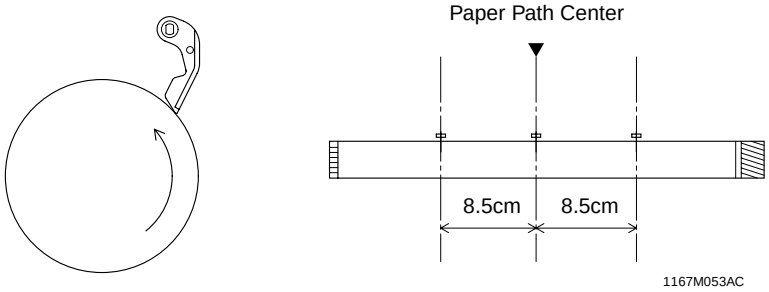

1171SBM1800A

18 PC DRUM CLEANING

- This copier employs a spent toner recycling mechanism. The Cleaning Blade which is held pressed against the surface of the PC Drum scrapes residual toner off the surface. The waste toner is conveyed by Spent Toner Feed Roller 1 and 2 to the Spent Toner Recycling Duct and eventually back to the Developer Mixing Chamber.

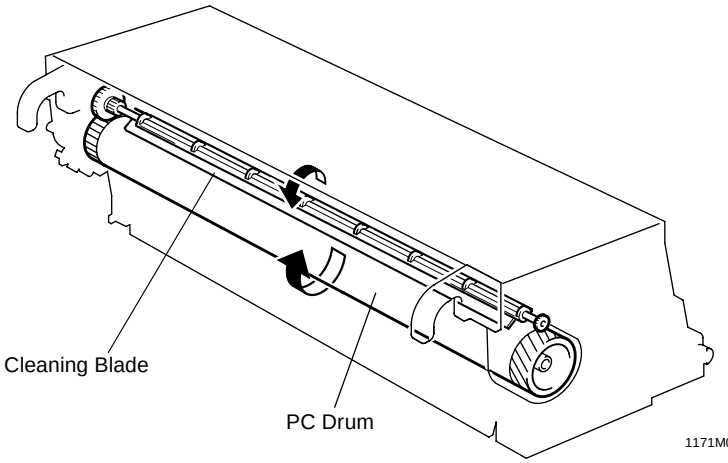

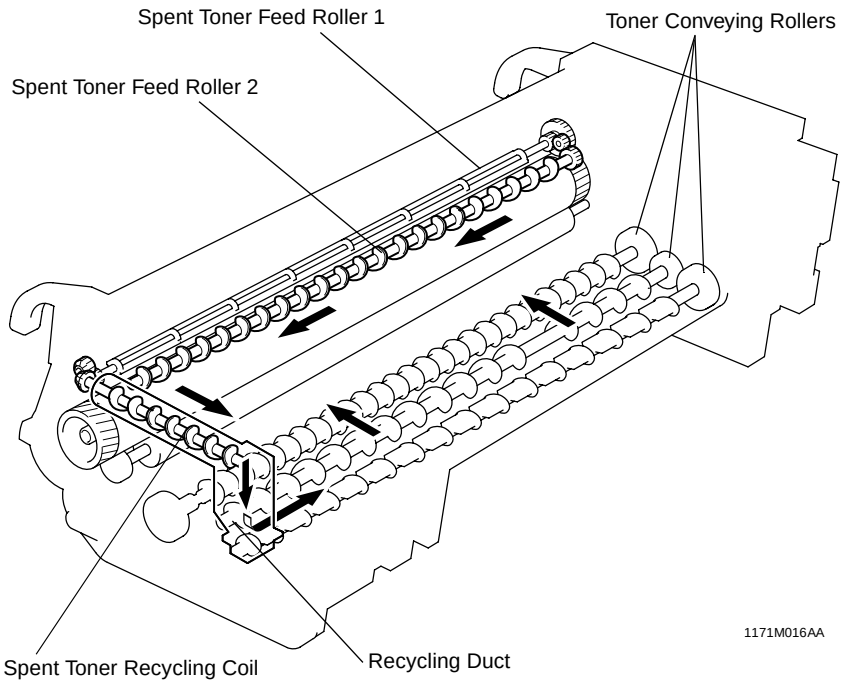

1171SBM1900A

19 FUSING UNIT

- The paper, to which the developed image is yet to be fixed, is fed through heated Left and Right Fusing Rollers. The heat and pressure applied at this time fixes the image permanently to the paper.

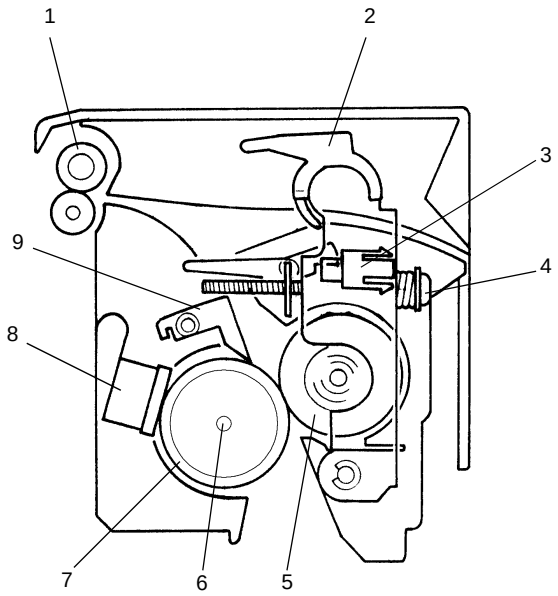

1167M078AB

1. Paper Exit Roller
2. Fusing Misfeed Clearing Lever
3. Paper Exit Sensor (PC3)
4. Pressure Spring
5. Right Fusing Roller
6. Fusing Roller Heater Lamp (H1)
7. Left Fusing Roller
8. Fusing Roller Thermostat (TS1)
9. Fusing Paper Separator Finger

1171SBM1901A
19-1. Drive Mechanism

- Drive from the Main Motor is transmitted via a gear train to the Right Fusing Roller.

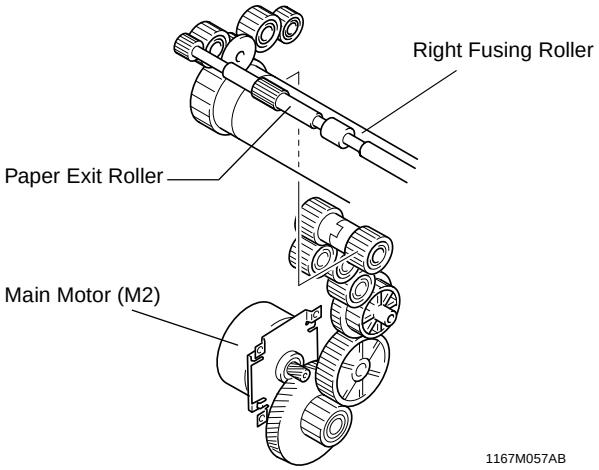

Electrical Component	Control Signal	ON	OFF
M2	PJ16A-1	L	H

1171SBM1902A
19-2. Fusing Rollers Pressure Mechanism

- To ensure that there is a certain width of area of contact between the Left and Right Fusing Rollers, pressure springs are installed.
- The rollers are held pressed against each other at all times and they are released only when servicing the copier or replacing parts.
- The pressure between the two rollers is approx. 17 kg.
- The rollers can be released by moving the Fusing Misfeed Clearing Lever in the direction of the arrow.

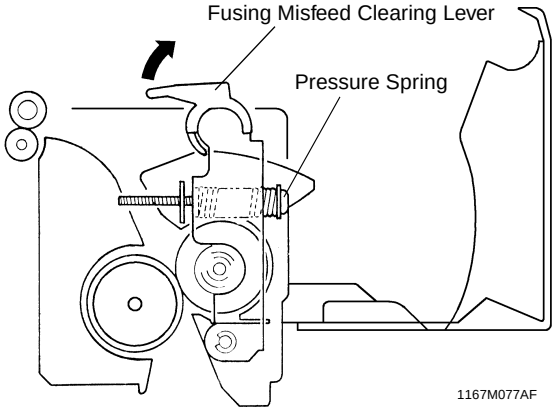

1171SBM1903A
19-3. Fusing Temperature Control

- The Fusing Roller Heater Lamp inside the Left Fusing Roller provides the following temperature control.

- Temperature Control During Standby State -

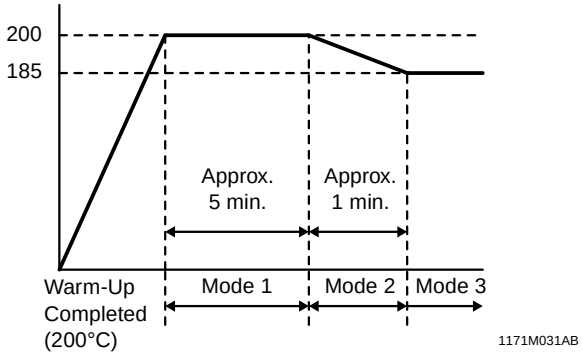

- Temperature Control During a Copy Cycle -

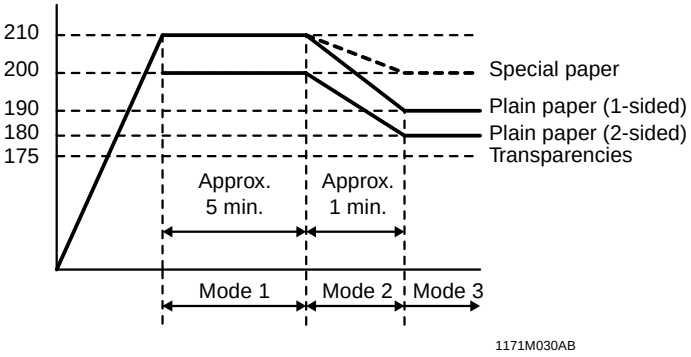

<Temperature Control>

- The Fusing Roller Thermistor detects the surface temperature of the Left Fusing Roller. It provides an analog voltage input to the Master Board allowing the copier to control the fusing temperature.

Electrical Component	Control Signal	ON	OFF
H1	PJ16A-8	L	H

Electrical Component	Control Signal	Low Temp. ↔ High Temp.
TH1	PJ16A-5	Analog input

<Temperature Control by Mode>
- The mode that is initiated following the completion of a warm-up cycle varies as detailed below depending on the machine condition and the Fusing Roller temperature at the restart of temperature control.

Machine Condition	Fusing Roller Temperature	
	Less than 100°C	100°C or higher
Power is turned ON.	Mode 1	Mode 2
Temperature control is interrupted during warm-up.		Mode 1
Temperature control is interrupted during mode 1.		
Temperature control is interrupted during mode 2.		Mode 2
Temperature control is interrupted during mode 3.		

1171SBM1904A
19-4. CPM Control
- As a measure to prevent the temperature on the edges of the Fusing Rollers (over which no part of paper passes) from rising in a multi-copy cycle using small size paper (width of 250 mm or less), the paper feed interval is made greater.

<Control>
- If a sheet of small size paper is taken up and fed in during mode 1, control is switched to mode 2.
- The number of sheets of small size paper that are fed through is counted.

<Timing>
- The counter reaches 30.
- The plain/special paper counter reaches N specified below:
  If the control is in mode 1 or mode 2 when the counter starts counting, N = 30.
  If the control is in mode 3 when the counter starts counting, N = 100.

<Resetting>
- If a period of 2 min. or more elapses, during which the counter does not count up after the counter has started counting, the counter is cleared resetting the CPM control.

1171SBM2000A

20 PAPER EXIT UNIT

- The Paper Exit Roller feeds the paper, to which the developed image has been fixed, out of the copier. The Charge Neutralizing Brush touches the surface of the sheet of paper being fed out of the Fusing Unit to neutralize any static charge left on it. This effectively prevents two sheets of paper fed out of the copier from sticking to each other due to static charge.

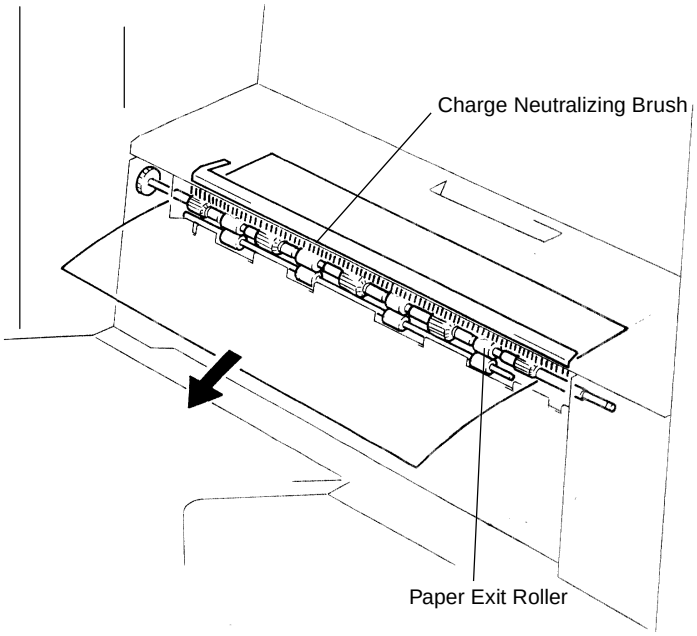

1167M061AC

1171SBM2100A

21 FUSING COOLING FAN MOTOR

- The Fusing Cooling Fan Motor located in the Right Door prevents the temperature of the Fusing Unit Cover and the area above the I/C from rising inordinately. The motor also draws the paper after it has been separated from the PC Drum onto the transport guide to ensure that it is stably and smoothly fed into the Fusing Unit.

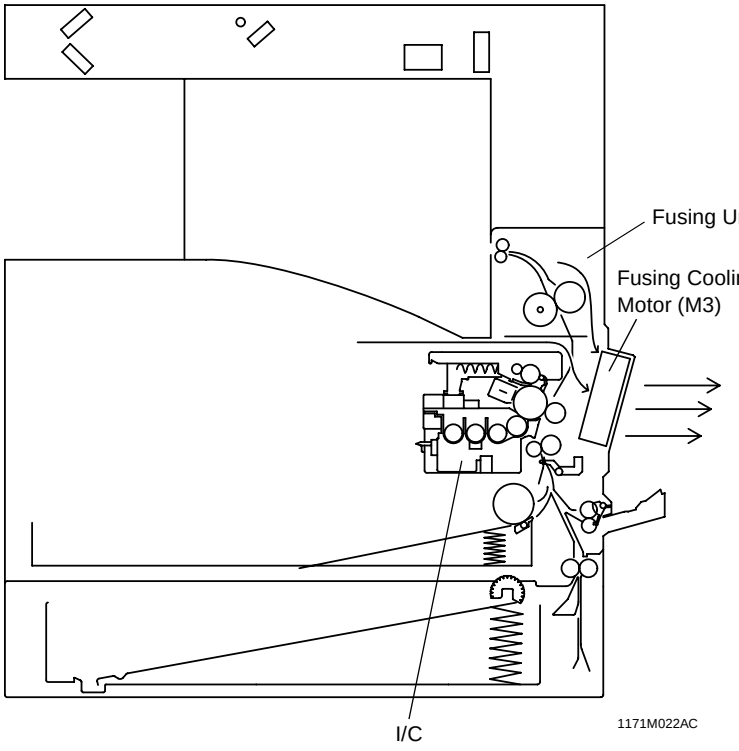

Electrical Component	Control Signal	During Copy Cycle	In Standby	During Warm-Up
		Full speed	Half speed	Stop
M3	PJ13A-3A	Pulse output		L

1171SBM2200A

22 POWER UNIT COOLING FAN MOTOR

- The Power Unit Cooling Fan Motor prevents the temperature at the Power Supply Unit and the Polygon Motor in the PH from rising inordinately.

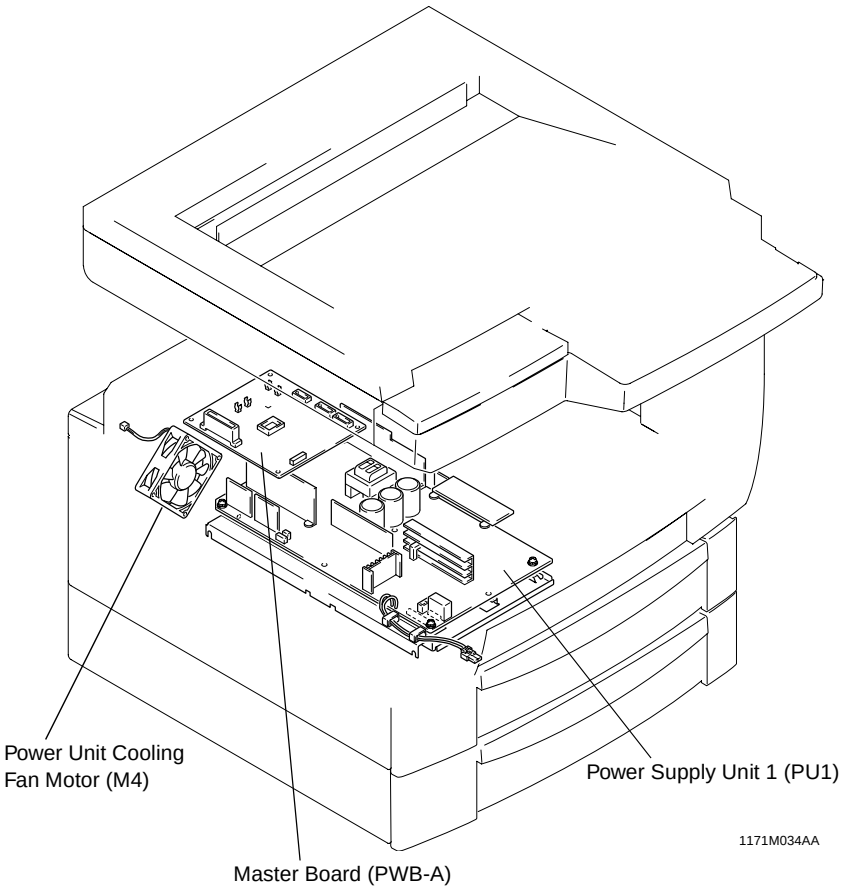

Electrical Component	Control Signal	While Main Motor is Turning	In Standby
		Full speed	Half speed
M4	PJ6A-2	DC24V	DC10V