FrameMaker Ver.5.5(PC) FN-100/FN-500 OPTION FOR Di350
98.11.04

# FN-100/FN-500

# SERVICE MANUAL

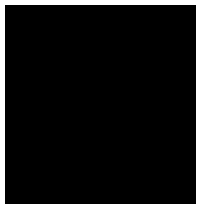




14413

# CONTENTS

## GENERAL, MECHANICAL/ELECTRICAL

1. SPECIFICATIONS ..... M-1
2. PARTS IDENTIFICATION ..... M-3
3. CROSS-SECTIONAL VIEW ..... M-4
4. DRIVE SYSTEM ..... M-5
5. ELECTRICAL COMPONENTS LAYOUT ..... M-6
6. TRANSPORT MECHANISM ..... M-8
   6-1. Paper Transport Mechanism ..... M-8
      (1) Paper Entrance Transport Mechanism ..... M-8
      (2) Transport Motor Control ..... M-8
      (3) 1st Tray Transport Mechanism ..... M-9
      (4) Upper Exit Motor Control ..... M-9
      (5) Mail Bin Transport Mechanism (FN-500) ..... M-10
      (6) Lower Transport Motor Control ..... M-10
   6-2. Paper Transport Path Switching Mechanism ..... M-11
      (1) 1st Tray/Finisher Tray Path Switching Mechanism ..... M-11
      (2) Upper Entrance Switching Solenoid Control ..... M-11
      (3) Finisher Tray/Mail Bin Path Switching Mechanism (FN-500) ..... M-12
      (4) Lower Entrance Switching Solenoid Control ..... M-12
7. PUNCH MECHANISM ..... M-13
8. FINISHER TRAY ..... M-14
   8-1. CD Aligning Mechanism ..... M-15
      (1) CD Aligning Plate ..... M-15
      (2) CD Aligning Motor Control ..... M-16
      (3) Paddle ..... M-17
      (4) Paddle Motor Control ..... M-17
      (5) Paper Curl Taming Mechanism ..... M-18
      (6) Paper Curl Taming Motor Control ..... M-18
   8-2. Shifting Mechanism ..... M-19
      (1) Shifting Mechanism ..... M-19
      (2) Shift Motor Control ..... M-19
   8-3. Finisher Tray Drive Mechanism ..... M-20
      (1) Finisher Tray Drive Mechanism ..... M-20
      (2) Paper Trailing Edge Alignment ..... M-20
      (3) Finisher Tray Motor Control ..... M-21
9. PAPER HOLDING TRAY ..... M-22
10. ELEVATOR TRAY ..... M-23
   10-1.Elevator Tray Ascent/Descent Mechanism ..... M-23
   10-2.Elevator Tray Stop Position Detection ..... M-24
11. STAPLING UNIT ..... M-25
   11-1.Stapler Mechanism ..... M-25
   11-2.Staple Sheet Empty Detection ..... M-26
12. HORIZONTAL TRANSPORT UNIT ..... M-27
   12-1.Parts Identification ..... M-27
   12-2.Paper Transport Mechanism ..... M-28

(1) Entrance Path Switching Mechanism ..... M-28
(2) Paper Entrance Switching Motor Control ..... M-28
(3) Paper Transport to Finisher ..... M-28

## DIS/REASSEMBLY, ADJUSTMENT

13. DIS/REASSEMBLY ..... D-1
13-1.Removal of the External Covers ..... D-1
13-2.Removal of the Punch Unit ..... D-2
13-3.Disassembly of the Stapling Unit ..... D-2
13-4.Removal and Reinstallation of the Cables ..... D-3
(1) Removal of the Cable (Rear) ..... D-3
(2) Removal of the Cable (Front) ..... D-4
(3) Installation of the Cable (Front):
The same procedure applies to the rear cable, except the cable winding direction which is opposite. ..... D-4
14. ADJUSTMENTS ..... D-5
14-1.Check/Adjustment of the Punch Hole Position ..... D-5
14-2.Adjustment of the Solenoids and Sensors ..... D-6
(1) Adjustment of Upper Entrance Switching Solenoid SL1 ..... D-6
(2) Adjustment of Lower Entrance Switching Solenoid SL2 (FN-500) .. D-7
(3) Sensor LED Output Adjustment ..... D-8

## TROUBLESHOOTING

1. SENSOR CHECK ..... T-1
1-1. Sensor Check ..... T-1
1-2. Sensor Check Procedures ..... T-1
2. MISFEED DETECTION AND TROUBLESHOOTING PROCEDURES ..... T-2
2-1. Location of Misfeed Detecting Sensors ..... T-2
2-2. Misfeed Detection ..... T-3
2-3. Troubleshooting Procedures ..... T-5
(1) Horizontal Transport Unit Misfeed ..... T-5
(2) Finisher Transport Section Misfeed ..... T-5
(3) 1st Tray Exit Misfeed ..... T-6
(4) Copy Set Exit Misfeed ..... T-6
(5) Mail Bin Transport Misfeed ..... T-7
(6) Finisher Tray Exit Misfeed ..... T-7
(7) Staple Misfeed ..... T-8
3. MALFUNCTION DETECTION AND TROUBLESHOOTING PROCEDURES . T-9
3-1. Malfunction Detection ..... T-9
3-2. Troubleshooting Procedures ..... T-11
(1) C0B00 ..... T-11
(2) C0B0F ..... T-11
(3) C0B30 ..... T-12
(4) C0B38 ..... T-12
(5) C0B4D ..... T-12
(6) C0B4E ..... T-13
(7) C0B50 ..... T-13
(8) C0BA0 ..... T-13

# GENERAL, MECHANICAL/ELECTRICAL

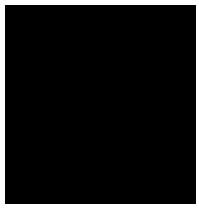

# 1 SPECIFICATIONS

Type : Auto Feeder Multi Staple Finisher
Installation : Freestanding
Modes : Non-Shift (Non-Sort), Shift (Sort/Group), Staple, Hole Punch
Copy Media :

| Mode | Paper Type | Paper Size | Weight | Max. Capacity | No. of Sheets to be Stapled |
|---|---|---|---|---|---|
| Non-Shift | Plain paper | Inch Areas: 5-1/2"×8-1/2" to 11"×17" Metric Areas: A6L to A3L | 60 to 90g/m² | 500 sheets (80g/m²) | |
| | Recycled paper | | | 500 sheets (80g/m²) | |
| | Thick paper | | | 20 sheets | — |
| | OHP trans-parencies | — | — | 10 sheets | |
| | Translu-cent paper | | | 10 sheets | |
| | Postcards | | | 10 sheets | |
| | Envelopes | | | 10 sheets | |
| Shift | Plain paper | Inch Areas: 5-1/2"×8-1/2", 8-1/2"×5-1/2", 8-1/2"×14", 11"×17" Metric Areas: A4C, A4L, A3L | 60 to 90g/m² | FN-100: 2000 sheets (A4L or smaller) FN-100: 1000 sheets (B4L or larger) FN-500: 1000 sheets (A4L or smaller) FN-500: 500 sheets (B4L or larger) FN-500: Mail Bin (200 sheets/bin) | — |
| | Recycled paper | | | | |
| Staple | Plain paper | Inch Areas: 5-1/2"×8-1/2", 8-1/2"×5-1/2", 8-1/2"×14", 11"×17" Metric Areas: A4C, A4L, A3L | 60 to 80g/m² | — | Max. 50 sheets (60 to 80g/m²) |
| | Recycled paper | | | | |
| Hole Punch | Plain paper | Inch Areas: (3 holes) 8-1/2"×11", 11"×17" (2 holes) 11"×8-1/2", 8-1/2"×14" Metric Areas: A4C, A4L, A3L | 60 to 90g/m² | — | — |
| | Recycled paper | | | | |

| | | |
|---|---|---|
| Registration | : | Center |
| No. of Holes | : | Inch Areas: 3 holes (2 holes is an option);<br>Metric Areas: 4 holes |
| Power Requirements | : | DC24V (supplied from copier) |
| Power Consumption | : | 63W |
| Dimensions | : | Width: 656 mm or 25-3/4”<br>Height: 984 mm or 38-3/4”<br>Depth: 620 mm or 24-1/2” |
| Weight | : | FN-100: 40.3 kg or 88-3/4 lbs.<br>FN-500: 49 kg or 108 lbs.<br>(excl. Horizontal Transport Unit) |
| Environmental Require-ments | : | Same as copier |
| Supplies | : | Staple Cartridge |
| Exit Trays | : | |

| Exit Tray / Machine | 1st | Elevator | Main Bin |
|---|---|---|---|
| Copier | ● ✻1 | ● | × |
| Copier + Printer | ● | ● | ● |

(●: To be fed onto ×: Not to be fed onto)
✻ 1: To be fed only in the Non-Shift mode.

## 2 PARTS IDENTIFICATION

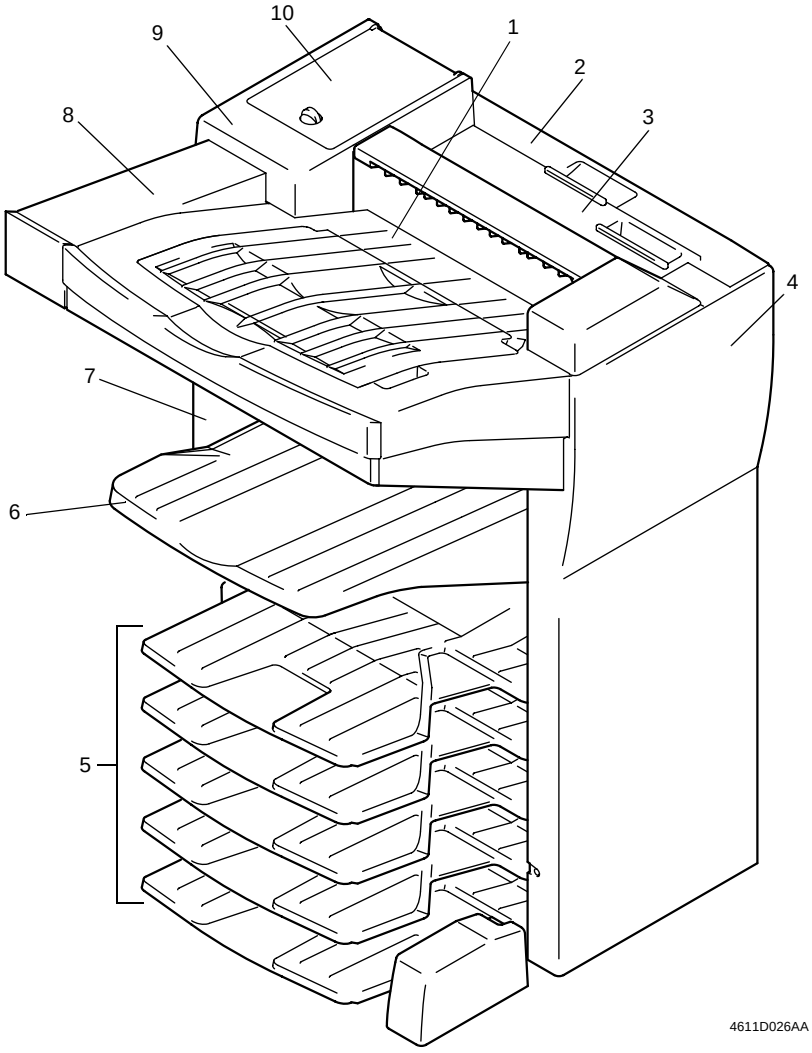


1. 1st Tray
2. Upper Right Cover
3. Misfeed Clearing Cover
4. Front Cover
5. Mail Bins (FN-500)
6. Elevator Tray
7. Rear Cover
8. Finisher Tray Cover
9. Upper Rear Cover
10. Staple Door

## 3 CROSS-SECTIONAL VIEW

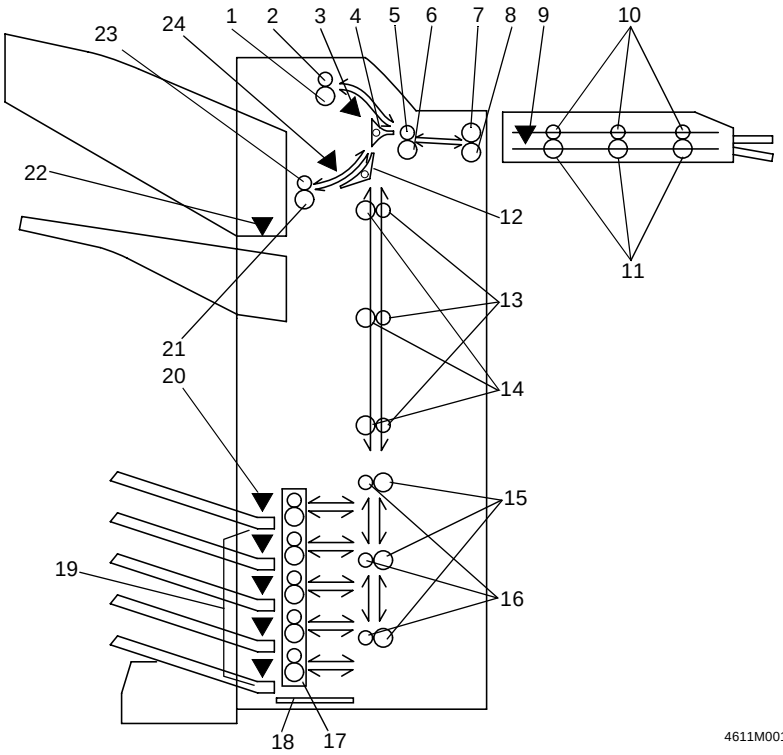


1. 1st Tray Exit Roller
2. 1st Tray Exit Roll
3. 1st Tray Exit Sensor PC1
4. Upper Entrance Switching Plate
5. Transport Roll
6. Transport Roller
7. Entrance Roller
8. Entrance Roll
9. Paper Sensor PC1
10. Horizontal Transport Rolls
11. Horizontal Transport Rollers
12. Lower Entrance Switching Plate
13. Vertical Transport Rolls
14. Vertical Transport Rollers
15. Mail Bin Transport Rollers
16. Mail Bin Transport Rolls
17. Mail Bin Exit Roller/Roll
18. Mail Bin Paper Exit Sensor LED PWB-C
19. 2nd to 5th Bin Empty Sensor PWB-D
20. Mail Bin Paper Exit Sensor PQ PWB-B
21. Finisher Tray Exit Roller
22. Elevator Tray Empty Sensor PQ PWB-F
23. Finisher Tray Exit Roll
24. Finisher Tray Exit Sensor PC3

# 4 DRIVE SYSTEM

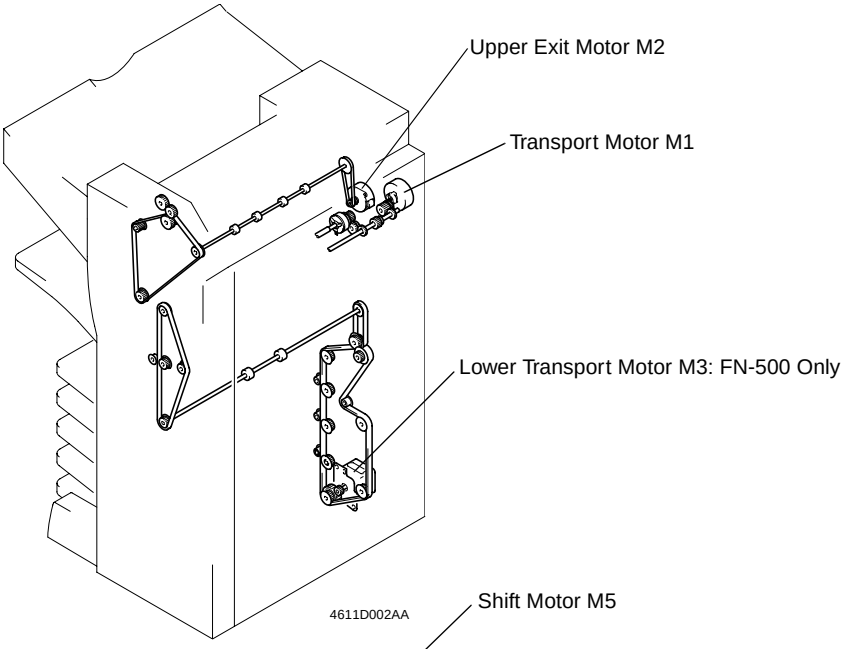


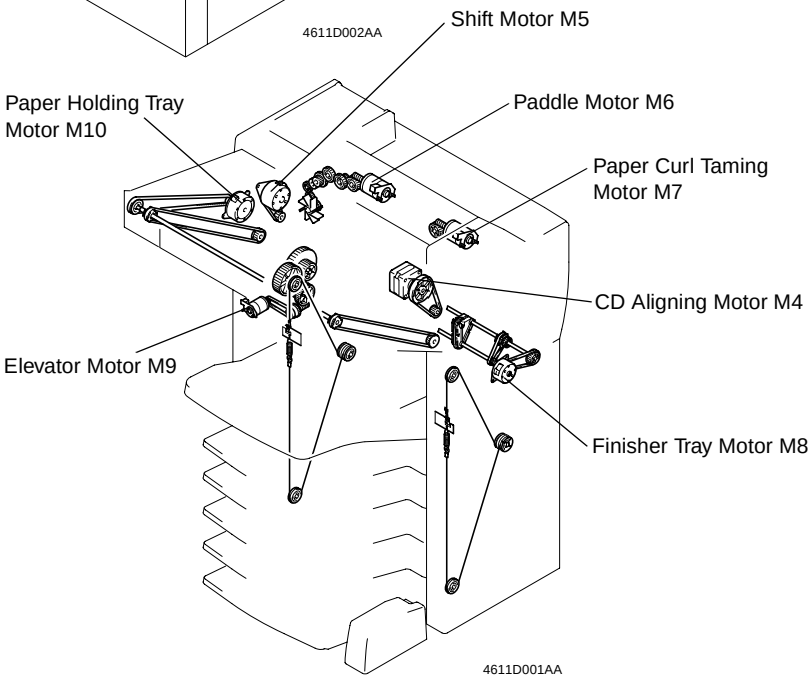

# 5 ELECTRICAL COMPONENTS LAYOUT

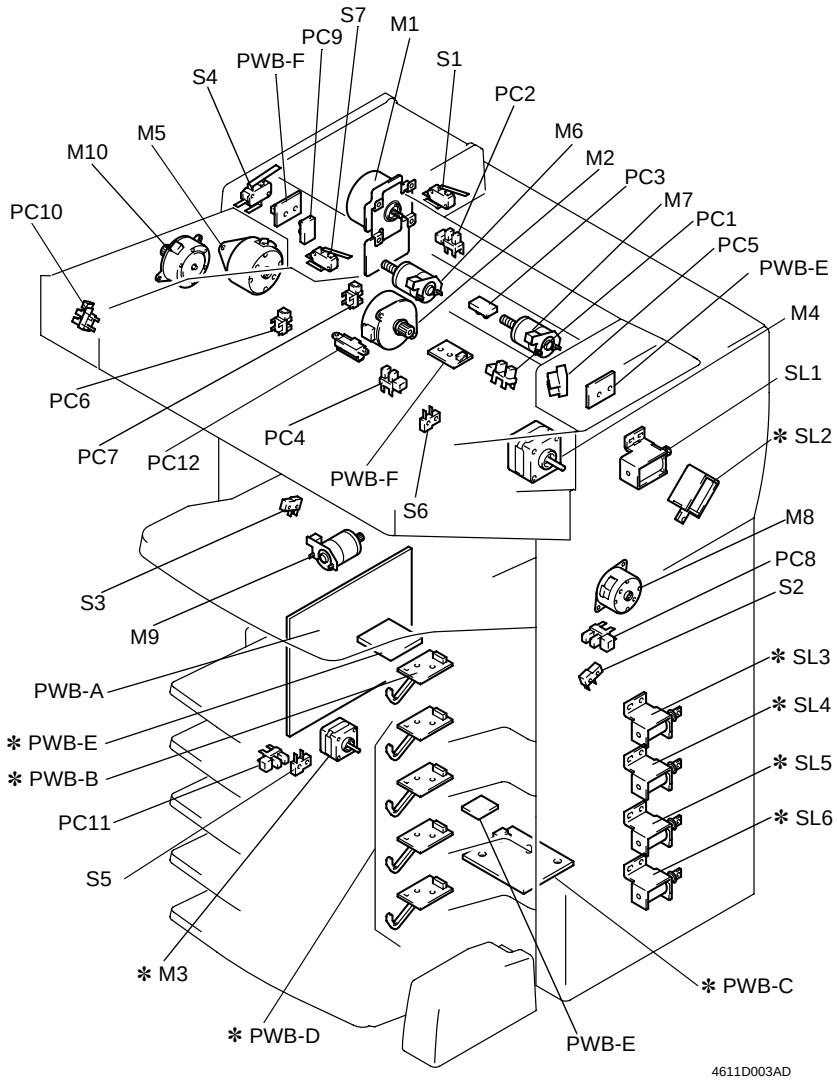

| Symbol | Name | Symbol | Name |
|---|---|---|---|
| PWB-A | Control Board | S1 | Upper Cover Set Switch |
| ✻ PWB-B | Mail Bin Paper Exit Sensor PQ | S2 | Elevator Upper Limit Interlock Switch 1 |
| ✻ PWB-C | Mail Bin Paper Exit Sensor LED | | |
| ✻ PWB-D | 2nd Bin Empty Sensor | S3 | Elevator Upper Limit Interlock Switch 2 |
| ✻ PWB-D | 3rd Bin Empty Sensor | | |
| ✻ PWB-D | 4th Bin Empty Sensor | S4 | Staple Door Switch |
| ✻ PWB-D | 5th Bin Empty Sensor | S5 | Elevator Lower Limit Interlock Switch |
| ✻ PWB-E | Elevator Tray Empty Sensor LED | | |
| PWB-E | 1st Tray Full Detecting Sensor LED | S6 | Set Switch |
| | | S7 | 1st Tray Door Switch |
| PWB-F | Elevator Tray Empty Sensor PQ | PC1 | 1st Tray Exit Sensor |
| PWB-F | 1st Tray Full Detecting Sensor PQ | PC2 | Finisher Tray Home Position Sensor |
| M1 | Transport Motor | PC3 | Finisher Tray Exit Sensor |
| M2 | Upper Exit Motor | PC4 | 1st Tray Empty Sensor |
| ✻ M3 | Lower Transport Motor | PC5 | CD Aligning Home Position Sensor |
| M4 | CD Aligning Motor | | |
| M5 | Shift Motor | PC6 | Shift Sensor |
| M6 | Paddle Motor | PC7 | Copy Set Detecting Sensor |
| M7 | Paper Curl Taming Motor | PC8 | Elevator Tray Upper Surface Sensor |
| M8 | Finisher Tray Motor | | |
| M9 | Elevator Motor | PC9 | Paper Holding Tray Home Position Sensor |
| M10 | Paper Holding Tray Motor | | |
| SL1 | Upper Entrance Switching Solenoid | PC10 | Paper Holding Tray Retract Position Sensor |
| ✻ SL2 | Lower Entrance Switching Solenoid | PC11 | Elevator Lower Limit Sensor |
| ✻ SL3 | 1st Bin Entrance Switching Solenoid | PC12 | Elevator Tray Retract Position Sensor |
| ✻ SL4 | 2nd Bin Entrance Switching Solenoid | | |
| ✻ SL5 | 3rd Bin Entrance Switching Solenoid | | |
| ✻ SL6 | 4th Bin Entrance Switching Solenoid | | |

✻ : FN-500 only

# 6 TRANSPORT MECHANISM

## 6-1. Paper Transport Mechanism

### (1) Paper Entrance Transport Mechanism

- Transport Motor drives the Horizontal Transport Rollers and Entrance Roller to transport the copy fed from the copier into the Finisher.

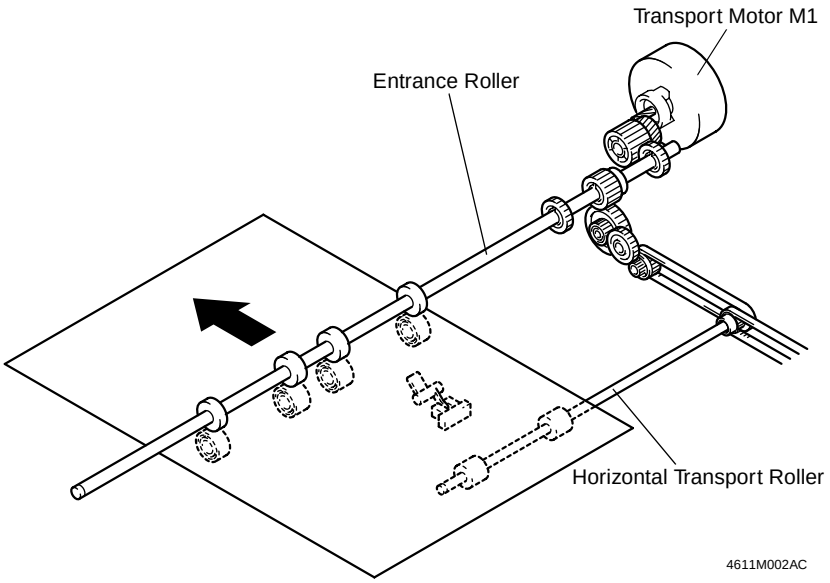


### (2) Transport Motor Control

- Transport Motor is energized and deenergized by the output signal from PJ9A-3 on PWB-A.

| M1 | PJ9A-3 |
|---|---|
| Energized | L |
| Deenergized | H |

- The speed of M1 is controlled by the output signal from PJ9A-5 on PWB-A.

| M1 | PJ9A-5 |
|---|---|
| High speed | H |
| Low speed | L |

**(3) 1st Tray Transport Mechanism**

- Upper Exit Motor drives the 1st Tray Exit Roller and Transport Roller to feed the copy into the 1st Tray.
- The speed at which the copy is transported is decelerated as it is fed into the 1st Tray.

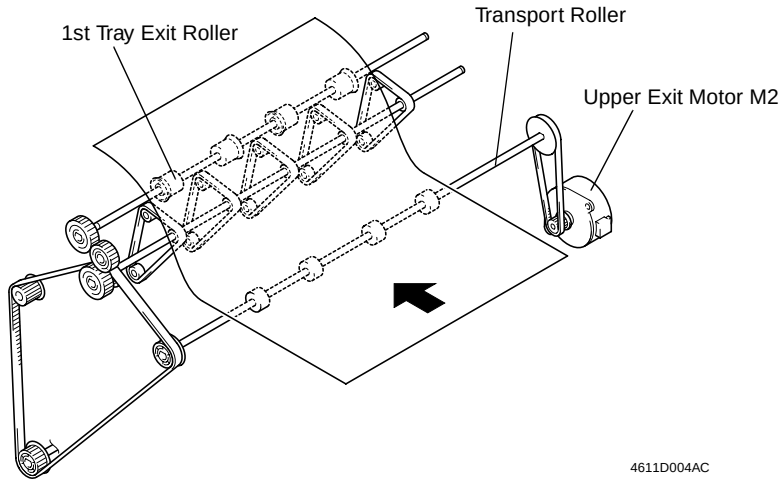


**(4) Upper Exit Motor Control**

- The pulse signals output from IC22A-6, 7, 8, and 9 on PWB-A are supplied to the two coils inside M2 and the combination and sequence of the pulse signals energized are varied to energize or deenergize Upper Exit Motor.
  The motor speed is varied by changing the width of the pulse signals.

| IC22A | Sequence | | | | |
|---|---|---|---|---|---|
| | 1 | 2 | 3 | 4 | |
| Pin 7 | H | H | L | L | |
| Pin 9 | L | H | H | L | |
| Pin 6 | L | L | H | H | |
| Pin 8 | H | L | L | H | |

**(5) Mail Bin Transport Mechanism (FN-500)**

- When a command is given from the personal computer to feed the copy into the Mail Bins, then all copies are fed into the Mail Bins.
- The copy fed into the Finisher is transported to the Mail Bin by the drive from Lower Transport Motor.
- A particular bin (as selected from among 1st to 5th Mail Bins) into which a particular copy is directed is selected by the Bin Entrance Switching Solenoid.

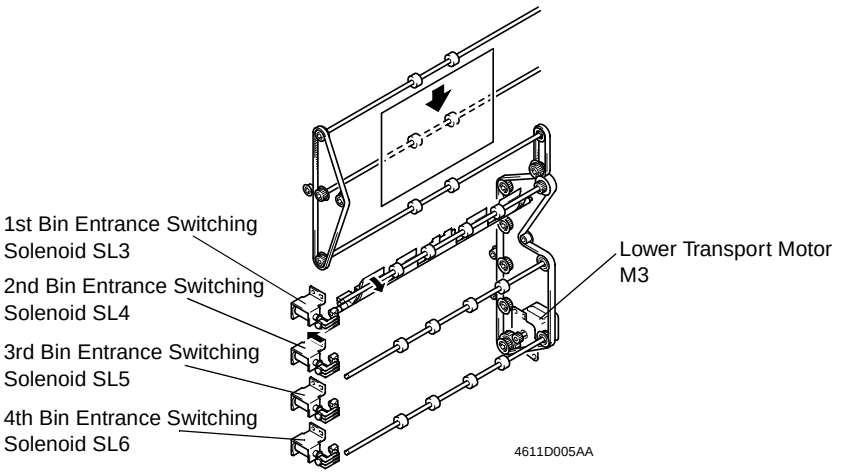


**(6) Lower Transport Motor Control**

- The pulse signals output from IC18A-6, 7, 8, and 9 on PWB-A are supplied to the two coils inside M3 and the combination and sequence of the pulse signals energized are varied to energize or deenergize Lower Transport Motor.
  The motor speed is varied by changing the width of the pulse signals.

| IC18A | Sequence | | | | |
|---|---|---|---|---|---|
| | 1 | 2 | 3 | 4 | |
| Pin 7 | H | H | L | L | |
| Pin 9 | L | H | H | L | |
| Pin 6 | L | L | H | H | |
| Pin 8 | H | L | L | H | |

## 6-2. Paper Transport Path Switching Mechanism

### (1) 1st Tray/Finisher Tray Path Switching Mechanism

- The paper transport path is switched between one to the 1st Tray and one to the Finisher Tray by energizing or deenergizing Upper Entrance Switching Solenoid.
- When the Upper Entrance Switching Solenoid is energized through PWM control, the copy is directed into the 1st Tray and, when it is deenergized, copy is directed toward the Finisher Tray.

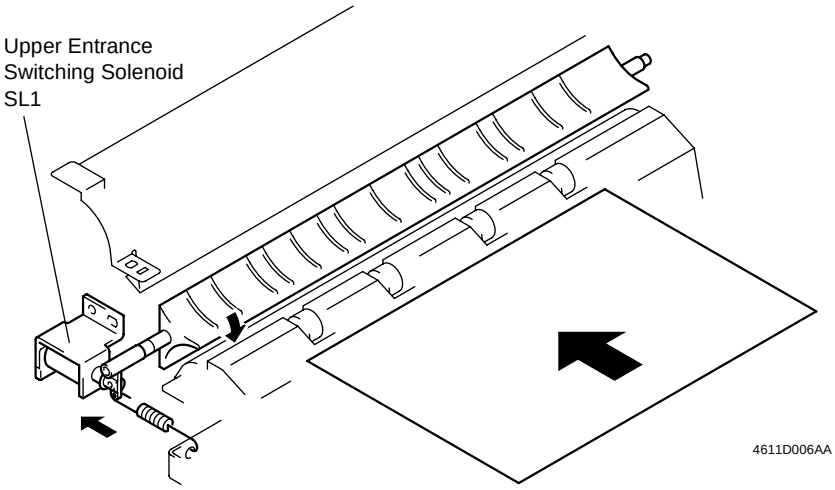


### (2) Upper Entrance Switching Solenoid Control

- Upper Entrance Switching Solenoid is energized and deenergized by the output signal from PJ11A-2 on PWB-A.

| SL1 | PJ11A-2 | OFF ON OFF<br>H<br>L<br>4611M006AA |
|---|---|---|
| Energized | L | |
| Deenergized | H | |

**(3) Finisher Tray/Mail Bin Path Switching Mechanism (FN-500)**

- The paper transport path is switched between one to the Finisher Tray and one to the Mail Bin by energizing or deenergizing Lower Entrance Switching Solenoid.
- When the Lower Entrance Switching Solenoid is energized through PWM control, the copy is directed toward the Mail Bin and, when it is deenergized, copy is directed into the Finisher Tray.

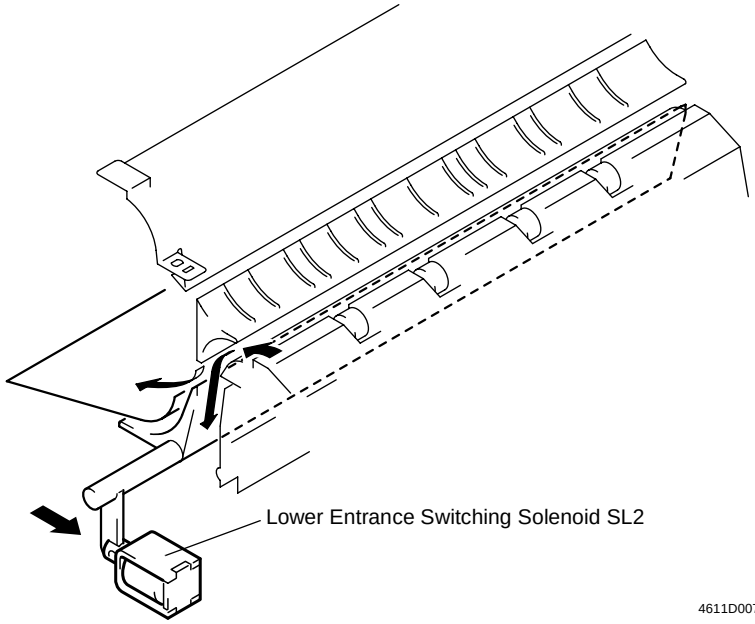


**(4) Lower Entrance Switching Solenoid Control**

- Lower Entrance Switching Solenoid is energized and deenergized by the output signal from PJ10A-2 on PWB-A.

| SL2 | PJ10A-2 | OFF ON OFF H L 4611M005AA |
|---|---|---|
| Energized | L | |
| Deenergized | H | |

## 7 PUNCH MECHANISM

- A copy being transported through the Finisher is briefly stopped and punched by the Punch Rods.
- By energizing and deenergizing Transport Motor and the electromagnetic spring clutch fitted to the Punch Roller, the Punch Rods are moved up and down to make punch holes in the copy.

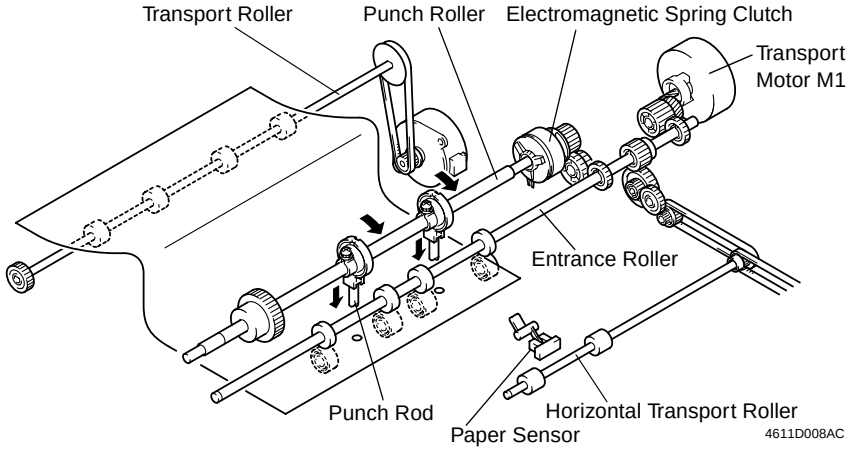


(Operation)
The copy is transported from the copier into the Horizontal Transport Unit.

↓

M1 is energized to turn the Horizontal Transport Rollers and Entrance Roller. (At the same time, Upper Exit Motor is energized to turn the Transport Roller.)

↓

The trailing edge of the copy moves past Paper Sensor of the Horizontal Transport Unit.

↓

After a given period of time, Upper Exit Motor is deenergized to stop the Transport Roller. (Since Transport Motor remains energized, a loop is formed in the copy before the Transport Roller.)

↓

The electromagnetic spring clutch is energized causing the Punch Roller and eccentric cams to turn. The Punch Rods are then moved up and down by the eccentric cams to make punch holes in the copy.

↓

Upper Exit Motor is energized again to feed the copy into a tray or bin.

## 8 FINISHER TRAY

- The Finisher Tray is used when aligning, shifting, and stapling a copy set/stack in the Shift or Staple mode.
- The Finisher Tray and Paper Holding Tray are retracted to let the copy set/stack which has been processed drop down onto the Elevator Tray.

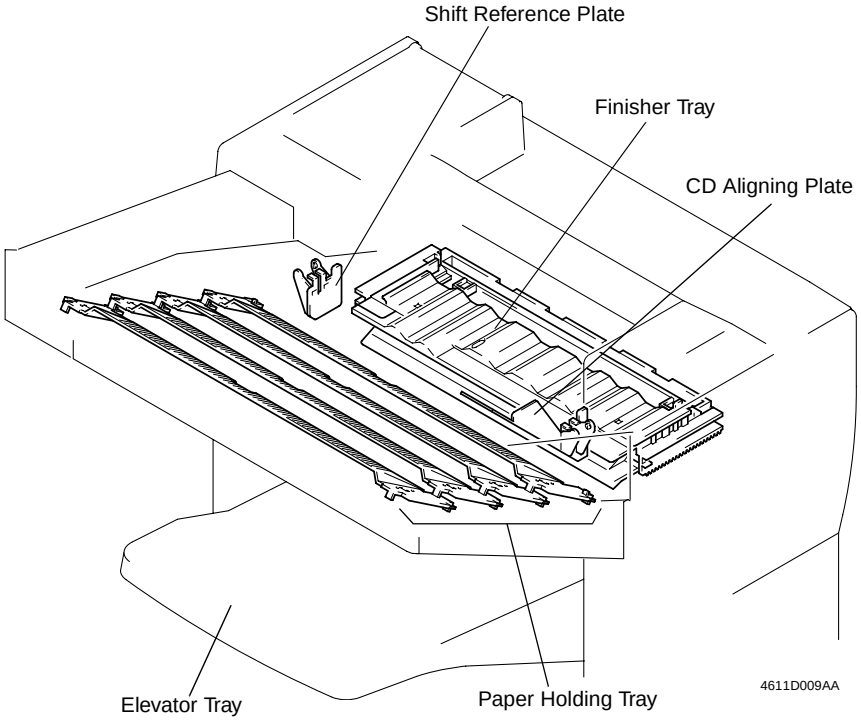

## 8-1. CD Aligning Mechanism

- The CD Aligning Plate is moved and the Paddle is rotated to press each copy up against the Shift Reference Plate.

**(1) CD Aligning Plate**

- The CD Aligning Plate is moved by the spiral shaft which is turned as CD Aligning Motor turns in the forward or backward direction.
- To ensure positive copy aligning motion, the CD Aligning Plate is moved from its home position to standby position before the copy is fed into the Finisher.
- It repeats moving between the standby and aligning positions until the last copy is aligned.
- The CD Aligning Plate is detected at its home position by CD Aligning Home Position Sensor. This position serves as the reference point, based on which the movement of the CD Aligning Plate is determined.
- The standby position is varied according to the paper size (CD length).

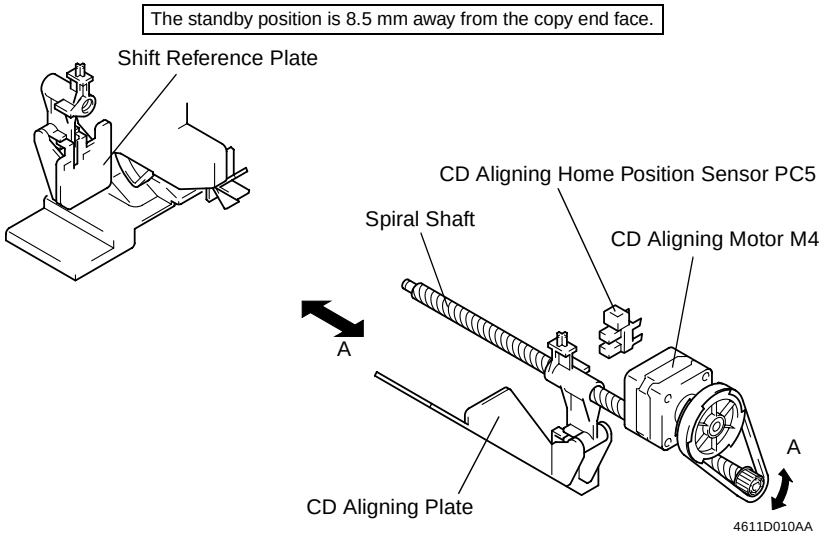

**(2) CD Aligning Motor Control**

- The pulse signals output from IC9A-6, 7, 8, and 9 on PWB-A are supplied to the two coils inside CD Aligning Motor and the combination and sequence of the pulse signals energized are varied to energize or deenergize CD Aligning Motor.
- The pulse signals output from IC9A-6, 7, 8, and 9 on PWB-A and applied to the motor contain the data that represents the movement of the CD Aligning Plate.

| IC9A | Sequence | | | | |
|---|---|---|---|---|---|
| | 1 | 2 | 3 | 4 | |
| Pin 7 | L | H | H | L | 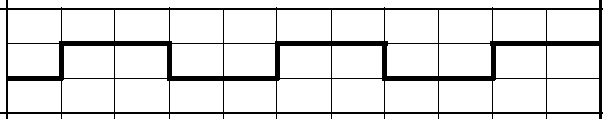 |
| Pin 9 | L | L | H | H | 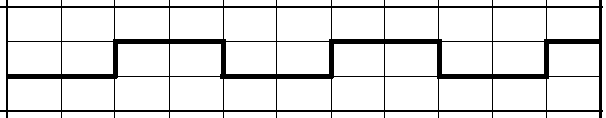 |
| Pin 6 | H | L | L | H | 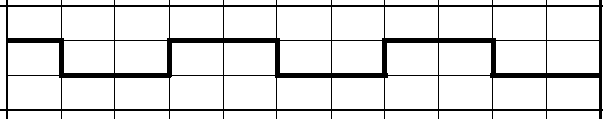 |
| Pin 8 | H | H | L | L | 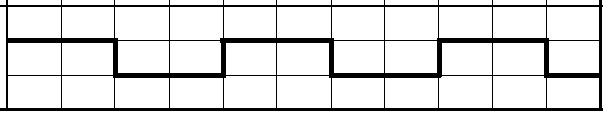 |

**(3) Paddle**

- The Paddle functions to move the copy, which has been fed by the CD Aligning Plate, further toward to the stapling corner.
- The gear is normally locked by the torque limiter and, when Paddle Motor turns forward, the Paddle lowers. As the tension of the spring exceeds the force of the torque limiter, the rotation of the motor is transmitted to the Paddle via the gear.

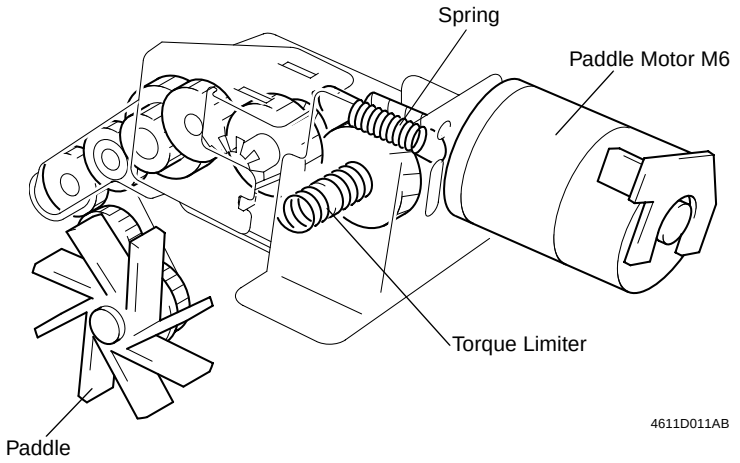


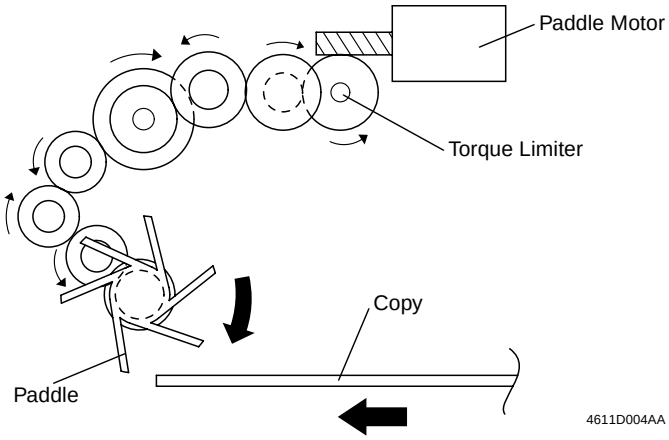


**(4) Paddle Motor Control**

The output signals from PJ11A-3 and -4 on PWB-A turn Paddle Motor forward or backward as detailed below.

| M6 | PJ11A-3 | PJ11A-4 |
|---|---|---|
| Forward Rotation | H | L |
| Backward Rotation | L | H |
| Stop | L | L |

**(5) Paper Curl Taming Mechanism**

- There is a Curl Tamer installed in the Finisher. Before the CD aligning motion occurs, the Curl Tamer is lowered to press the trailing edge of the copy transported onto the Finisher Tray.
- The Curl Tamer is lowered and retracted upward as Paper Curl Taming Motor turns in the forward and backward direction.

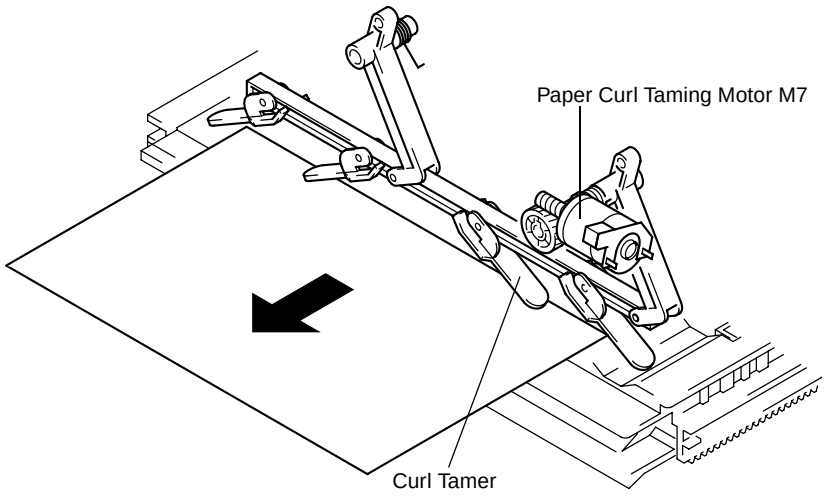


**(6) Paper Curl Taming Motor Control**

The output signals from PJ13A-13 and -14 on PWB-A turn Paper Curl Taming Motor forward or backward as detailed below.

| M7 | PJ13A-13 | PJ13A-14 | Curl Tamer |
|---|---|---|---|
| Forward Rotation | H | L | Lowered |
| Backward Rotation | L | H | Retracted |
| Stop | L | L | Retracted |

## 8-2. Shifting Mechanism

### (1) Shifting Mechanism

- A copy set/stack which has been aligned and stapled together is transported to the non-sort position or sort position.
- The Shift Reference Plate is moved by the spiral shaft which is turned as Shift Motor is energized.
- The Shift Reference Plate is detected at its home position by Shift Sensor. This home position serves as the reference, based on which the movement of the Shift Reference Plate is determined.

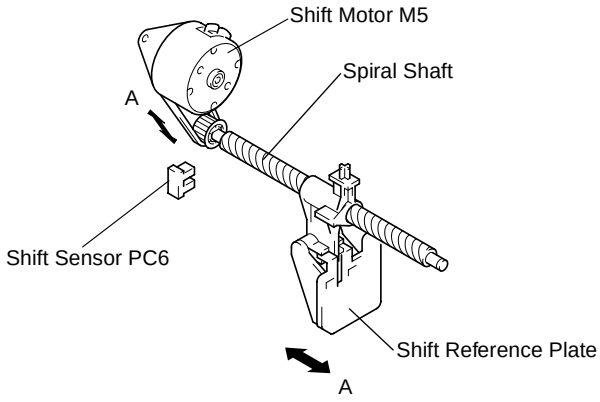


### (2) Shift Motor Control

- The pulse signals output from IC13A-6, 7, 8, and 9 on PWB-A are supplied to the two coils inside Shift Motor and the combination and sequence of the pulse signals energized are varied to energize or deenergize Shift Motor.
- The pulse signals output from IC13A-6, 7, 8, and 9 on PWB-A and applied to the motor contain the data that represents the movement of the Shift Reference Plate.

| IC13A | Sequence | | | | |
|---|---|---|---|---|---|
| | 1 | 2 | 3 | 4 | |
| Pin 7 | H | L | L | H | |
| Pin 9 | H | H | L | L | |
| Pin 6 | L | H | H | L | |
| Pin 8 | L | L | H | H | |

## 8-3. Finisher Tray Drive Mechanism

### (1) Finisher Tray Drive Mechanism

- The Finisher Tray is retracted so that the copy set/stack which has been processed is dropped down onto the Elevator Tray.
- The retracting motion of the Finisher Tray is accomplished as the drive from Finisher Tray Motor is transmitted via a belt and gear to move the rack in the left-to-right direction.
- The Finisher Tray is detected at its home position by Finisher Tray Home Position Sensor. This home position serves as the reference, based on which the amount to retract the tray is determined.
- The Finisher Tray is moved to its home position when Finisher Tray Motor is turned forward and retracted when Finisher Tray Motor is turned backward.

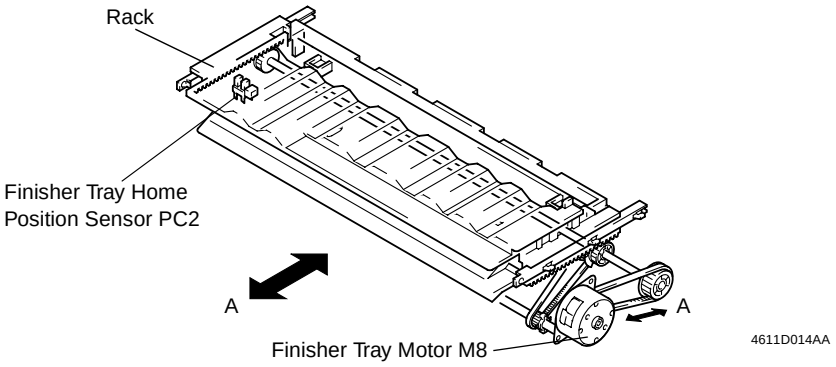


### (2) Paper Trailing Edge Alignment

- When the copy set/stack is dropped down onto the Elevator Tray as the Finisher Tray is retracted, its trailing edge does not at times rest flat on the Elevator Tray, curving upward. When the Finisher Tray returns back to its home position, the Paper Aligning Belts are turned so that the trailing edges of the pages of the copy set/stack are properly aligned.
- The Paper Aligning Belts are turned by the gear, belt, and one-way gear, driven from Finisher Tray Motor that turns forward. When Finisher Tray Motor turns backward (to retract the Finisher Tray), the Paper Aligning Belts do not turn because of the functioning of the one-way gear.

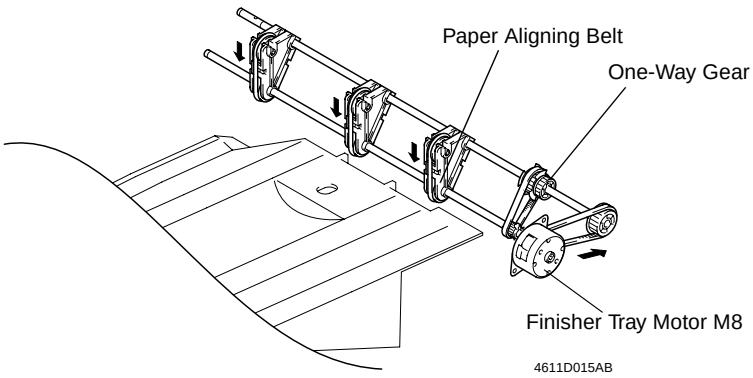

**(3) Finisher Tray Motor Control**

- The pulse signals output from IC21A-6, 7, 8, and 9 on PWB-A are supplied to the two coils inside Finisher Tray Motor and the combination and sequence of the pulse signals energized are varied to turn Finisher Tray Motor forward or backward, or deenergize it.
- The pulse signals output from IC21A-6, 7, 8, and 9 on PWB-A and applied to the motor contain the data that represents the movement of the Finisher Tray.

| IC21A | Sequence | | | | |
|---|---|---|---|---|---|
| | 1 | 2 | 3 | 4 | |
| Pin 7 | H | L | L | H | 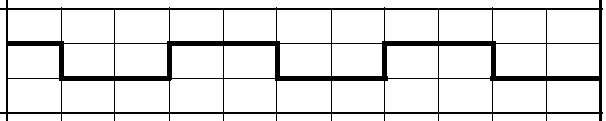 |
| Pin 9 | H | H | L | L | 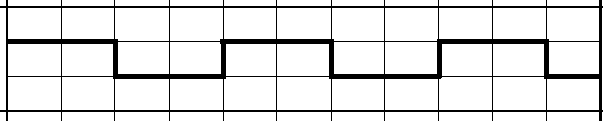 |
| Pin 6 | L | H | H | L | 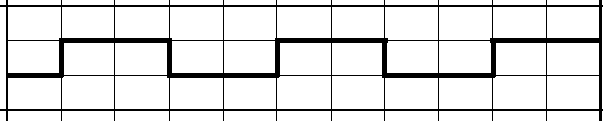 |
| Pin 8 | L | L | H | H | 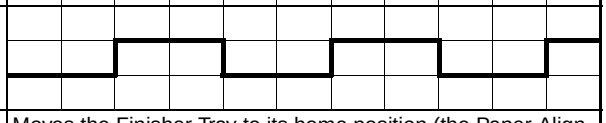 |
| Forward Rotation |  | | | | Moves the Finisher Tray to its home position (the Paper Aligning Belts are turned). |
| Backward Rotation |  | | | | Retracts the Finisher Tray. |

# 9 PAPER HOLDING TRAY

- The Paper Holding Tray is retracted so that the copy set/stack which has been processed is dropped down onto the Elevator Tray.
- The tray is moved by gears and belts which are driven by Paper Holding Tray Motor.
- The tray is divided into four parts. The retracted position of the tray is varied according to the paper size.
- The tray is detected at its home position by Paper Holding Tray Home Position Sensor. This home position serves as the reference, based on which the amount to retract the tray is determined.

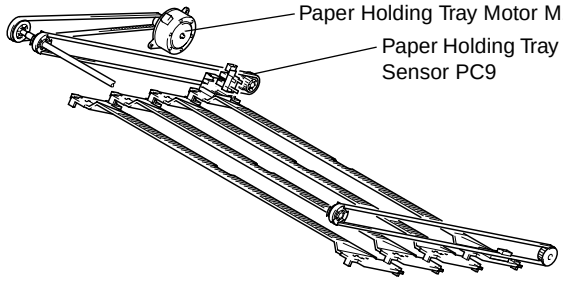


(Paper Holding Tray Motor Control)

- The pulse signals output from IC26A-6, 7, 8, and 9 on PWB-A are supplied to the two coils inside Paper Holding Tray Motor and the combination and sequence of the pulse signals energized are varied to turn Paper Holding Tray Motor forward or backward, or deenergize it.
- The pulse signals output from IC26A-6, 7, 8, and 9 on PWB-A and applied to the motor contain the data that represents the movement of the Paper Holding Tray.

| IC26A | Sequence | | | | |
|---|---|---|---|---|---|
| | 1 | 2 | 3 | 4 | |
| Pin 7 | H | H | L | L | |
| Pin 9 | L | H | H | L | |
| Pin 6 | L | L | H | H | |
| Pin 8 | H | L | L | H | |
| Forward Rotation | → | | | | Moves the Paper Holding Tray to its home position. |
| Backward Rotation | ← | | | | Retracts the Paper Holding Tray. |

# 10 ELEVATOR TRAY

- The Elevator Tray moves up and down each time a copy or copy set/stack is fed into the Finisher.
- The tray can stop at three different positions: the standby, processing, and retracted positions.

## 10-1. Elevator Tray Ascent/Descent Mechanism

- The Elevator Tray is moved up and down as Elevator Motor turns forward and backward, respectively.

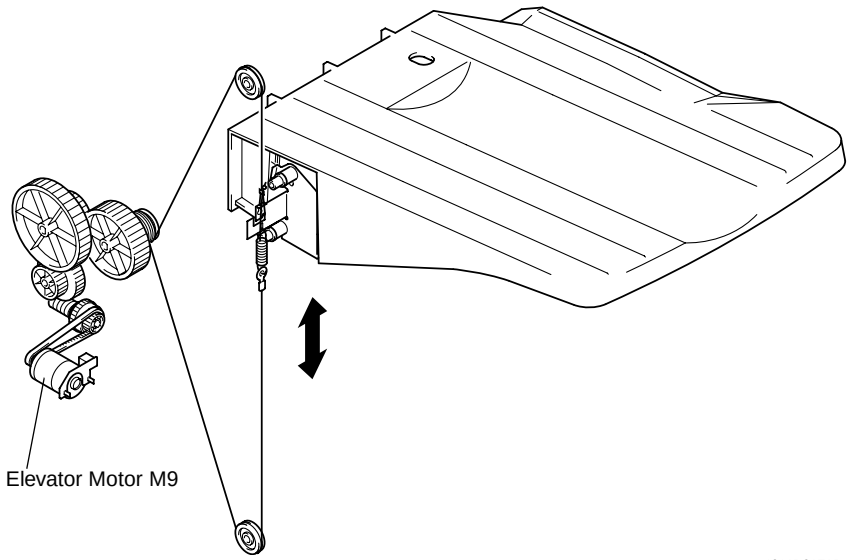


4611D017AB

(Elevator Motor Control)
The output signals from PJ6A-1 and -2 on PWB-A turn Elevator Motor forward or backward as detailed below.

| M9 | PJ6A-1 | PJ6A-2 | Elevator Tray |
|---|---|---|---|
| Forward Rotation | H | L | Ascent |
| Backward Rotation | L | H | Descent |
| Stop | L | L | Stop |

## 10-2. Elevator Tray Stop Position Detection

- The Elevator Tray stops at the following positions.

| Position | Condition | Detection |
|---|---|---|
| Process-ing | When a copy or copy set/stack is fed into Finisher | The position at which Elevator Tray Upper Surface Sensor PC8 goes from LOW to HIGH (ascent). |
| Retracted | Between two copies or copy sets/ stacks | The position the Elevator Tray lowers 55 mm from where PC8 goes from LOW to HIGH (descent). |
| Standby | In standby and when copy sets/stacks are removed | 55 mm ±22 mm from the processing position, as measured by Elevator Tray Retract Position Sensor PC12. |

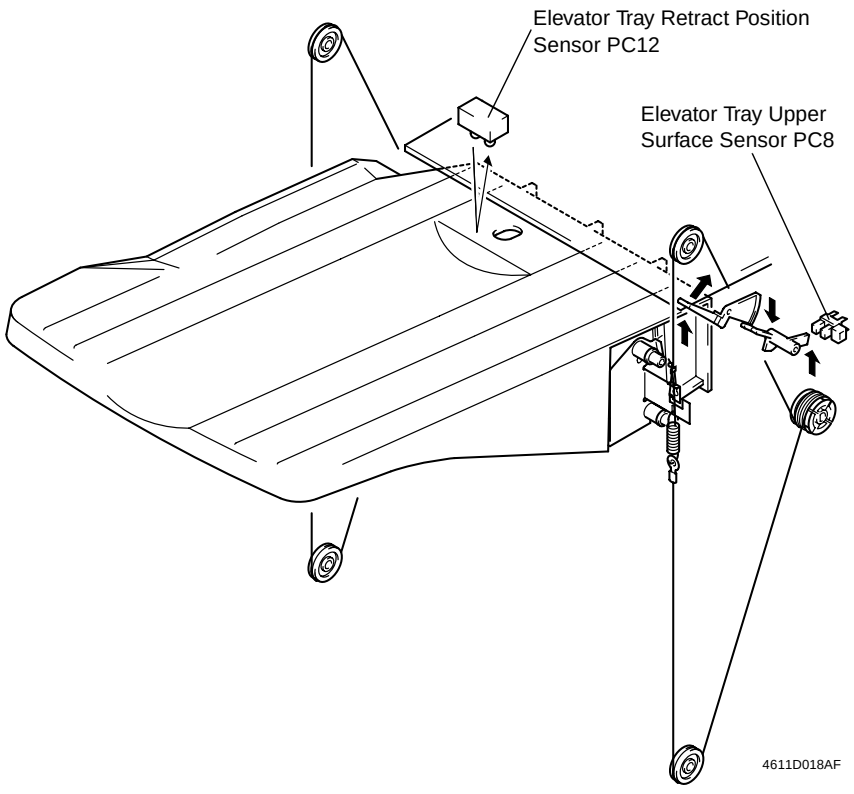

# 11 STAPLING UNIT

## 11-1. Stapler Mechanism

- When the Stapling Motor turns forward, the Clinch Arm lowers. The Stapler thereafter moves upward to drive a staple into the copy paper and the staple end is bent over by the Clinch. When the Stapling Motor then turns backward to move up the Clinch Arm and lower the Stapler.
- The stapling position is one point in the rear corner.

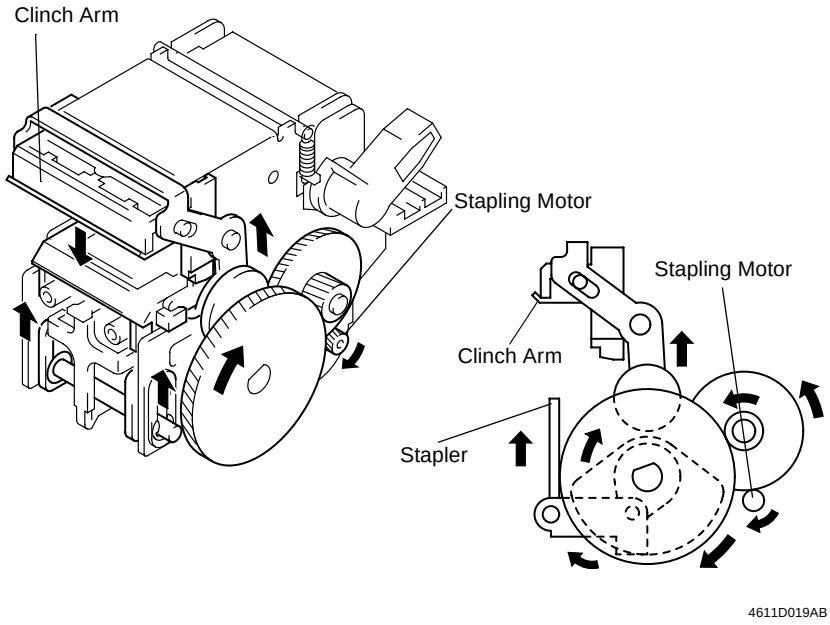


(Stapling Motor Control)
The output signals from PJ12A-1, 2, 3, 4 on PWB-A turn the Stapling Motor forward or backward as detailed below.

| Stapling Motor | PJ12A-1, 2 | PJ12A-3, 4 | Clinch Arm | Stapler |
|---|---|---|---|---|
| Forward Rotation | H | L | Descent | Ascent |
| Backward Rotation | L | H | Ascent | Descent |
| Stop | L | L | Stop | Stop |

## 11-2. Staple Sheet Empty Detection

- The Staple Empty Detecting Sensor is used to detect whether there is a staple sheet or not in the Staple Cartridge.
- When the number of staples left in the Staple Cartridge becomes about 40, a staple-sheet-empty condition is detected and displayed on the copier control panel.
- If a staple-sheet-empty condition is detected in mid-operation of a stapling sequence, it is displayed after that particular stapling sequence is completed.
- After a new Staple Cartridge has been loaded, the Stapling Motor is energized until the Staple Empty Detecting Sensor detects a staple sheet. After that time, the Stapling Motor is energized once again.
  Feed a sheet of paper out into the Finisher and check to see if a staple is driven into it properly.

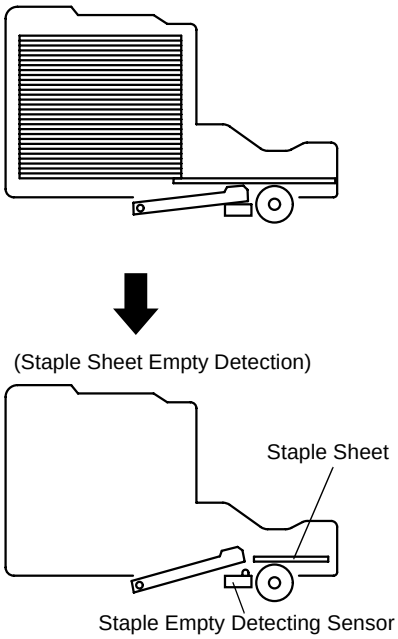


(Staple Empty Detecting Sensor Control)

| Staple sheet | PJ12A-7 |
|---|---|
| Loaded | L |
| Empty | H |

# 12 HORIZONTAL TRANSPORT UNIT

## 12-1. Parts Identification

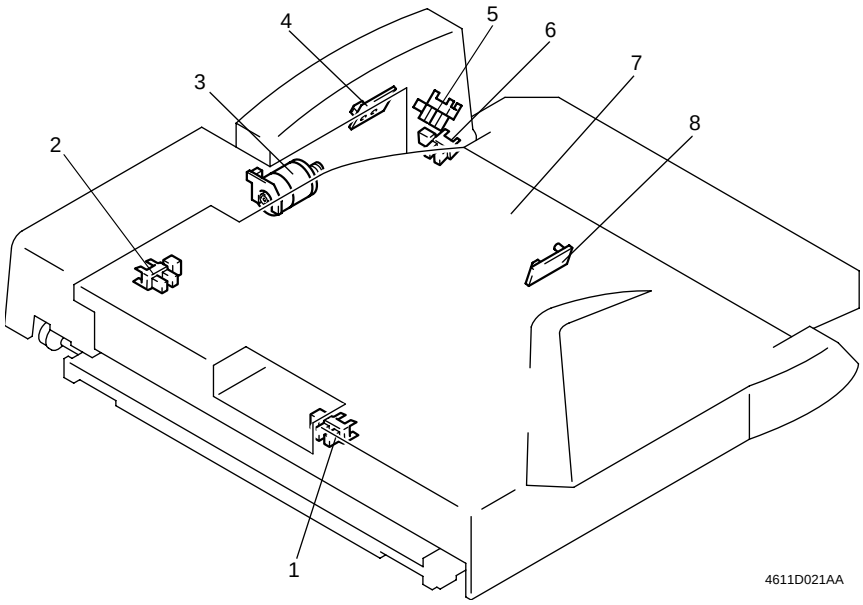


1. Paper Sensor PC1
2. Horizontal Unit Door Sensor PC4
3. Paper Entrance Switching Motor M1
4. Non-Sort Tray Paper Empty Sensor PQ PWB-A
5. Finisher Transport Position Detecting Sensor PC3
6. Non-Sort Tray Transport Position Detecting Sensor PC2
7. Non-Sort Tray
8. Non-Sort Tray Paper Empty Sensor LED PWB-B

## 12-2. Paper Transport Mechanism

### (1) Entrance Path Switching Mechanism

- The path for the copy fed out from the copier is selected as detailed below.
  2-sided copy mode: Paper Entrance Switching Motor is energized to swing the Path Switching Guide upward and stop it when Non-Sort Tray Transport Position Detecting Sensor is blocked.
  A mode other than Non-Sort: Paper Entrance Switching Motor is energized to swing the Path Switching Guide upward and stop it when Finisher Transport Position Detecting Sensor is blocked.
- If the Horizontal Transport Unit is loose on the copier, the Drive Coupling Lever is not in position, unable to transmit Paper Entrance Switching Motor drive to the gear.

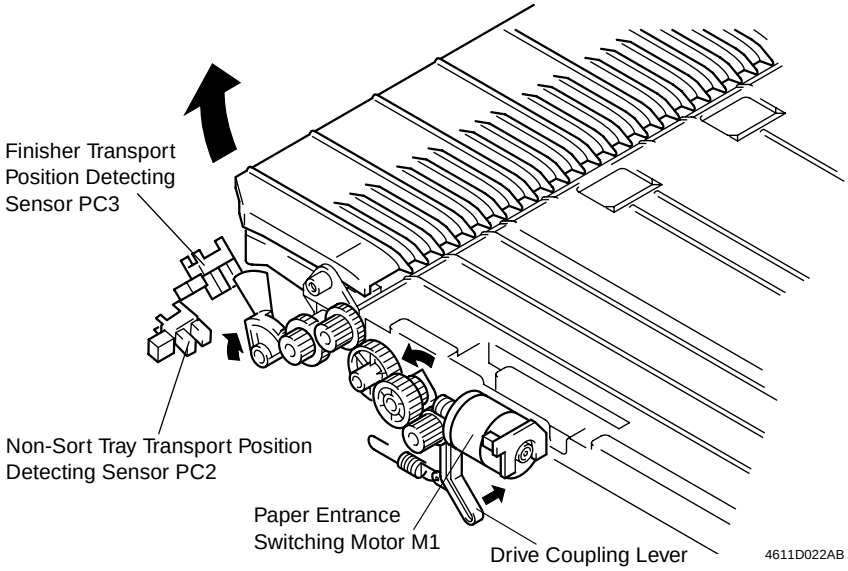


### (2) Paper Entrance Switching Motor Control

- The output signals from PJ14A-1 and -2 on PWB-A of the Finisher turn Paper Entrance Switching Motor forward or backward as detailed below.

| M1 | PJ14A-1 | PJ14A-2 |
|---|---|---|
| Forward Rotation | H | L |
| Backward Rotation | L | H |
| Stop | L | L |

### (3) Paper Transport to Finisher

- The drive from Transport Motor of the Finisher, together with gears and belts, is used to transport copies through the Finisher.

# DIS/REASSEMBLY, ADJUSTMENT

✻ Precautions for Disassembly, Reassembly, and Adjustment

1. Before attempting to disassemble the Finisher, always make sure that no power is being supplied from the copier. (Be sure to unplug the power cord of the copier.)
2. While power is being supplied to the Finisher, do not attempt to remove/install the print jacks or unplug/plug in the connectors.
3. If the Finisher is run with its covers removed, use care not to allow your clothing to be caught in the belt or other revolving part.
4. The basic rule is do not run the Finisher with any of its parts removed.
5. To reassemble the Finisher, reverse the order of disassembly unless otherwise specified.
6. Do not attempt to remove or loosen the screws to which red paint has been applied.

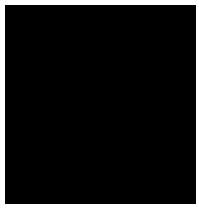

# 13 DIS/REASSEMBLY

## 13-1. Removal of the External Covers

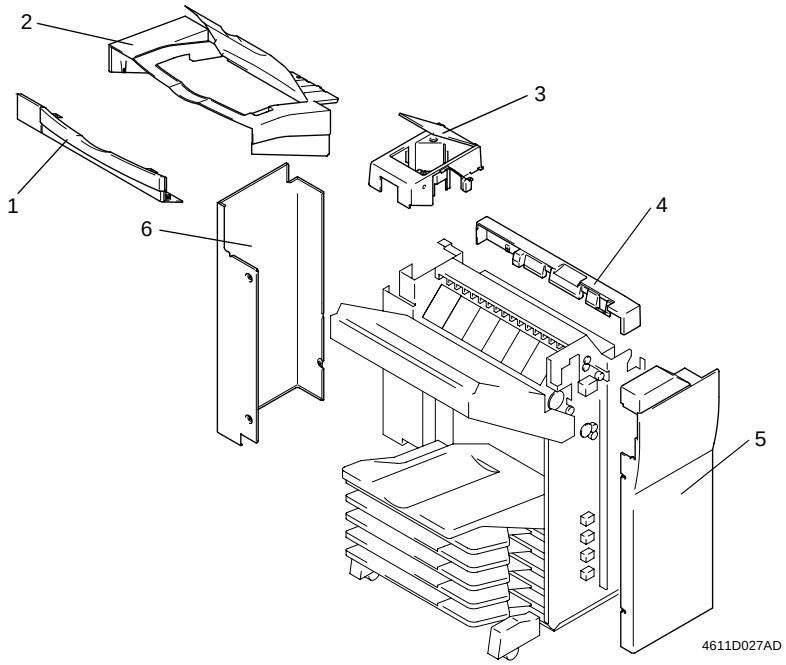


1. Upper Left Cover : Remove the Finisher Tray Cover and then remove two screws.
2. Finisher Tray Cover : Open the Top Cover of the Finisher Tray and remove four screws.
3. Upper Rear Cover : Open the Misfeed Clearing Cover and remove three screws.
4. Upper Right Cover : Open the Misfeed Clearing Cover and remove two screws.
5. Front Cover : Open the Misfeed Clearing Cover and remove the Upper Right Cover; then, remove five screws.
6. Rear Cover : Remove five screws.

## 13-2. Removal of the Punch Unit

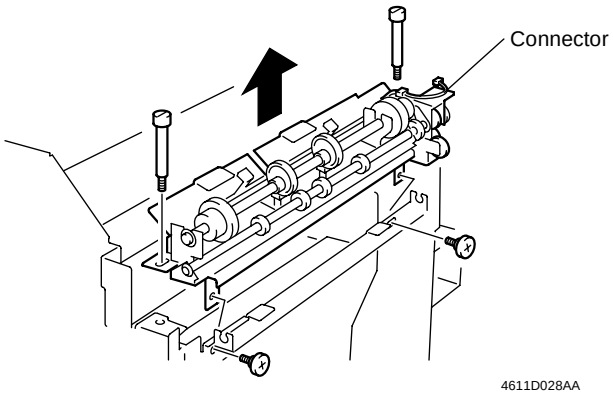


## 13-3. Disassembly of the Stapling Unit

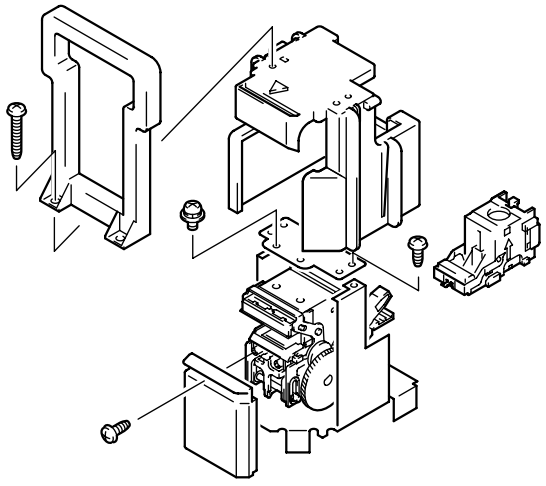

## 13-4. Removal and Reinstallation of the Cables

### (1) Removal of the Cable (Rear)

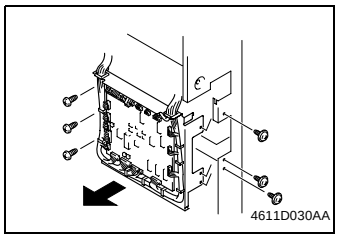


1. Remove PWB-A.

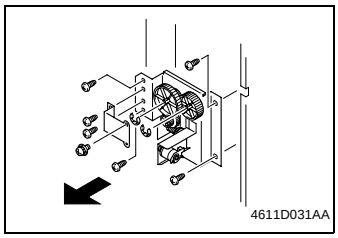


2. Remove the Elevator Motor (M9) Assy.

***NOTE***
*During the removal procedure, support the Elevator Tray to prevent it from jerking down.*

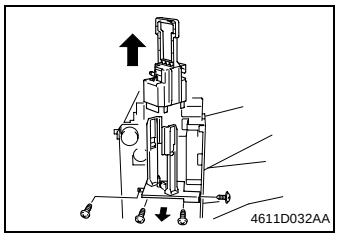


3. Pull out the Stapling Unit and remove the Stapling Unit Base.

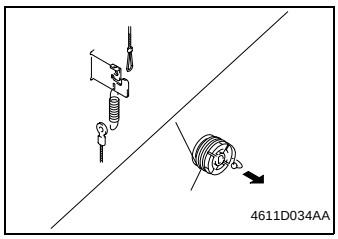


4. Unhook the cable from the spring.
5. Remove the ball from the cable pulley.
6. Unhook the cable from the hook.

**(2) Removal of the Cable (Front)**

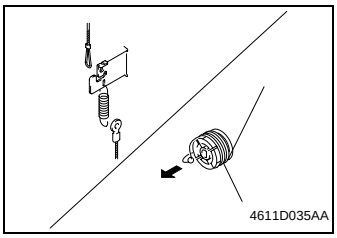


1. Unhook the cable from the spring.
2. Remove the ball from the cable pulley.
3. Unhook the cable from the hook.

**(3) Installation of the Cable (Front): The same procedure applies to the rear cable, except the cable winding direction which is opposite.**

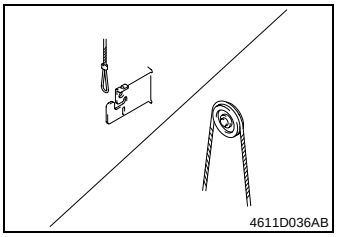


1. Hook the cable on the hook.
2. Wind the cable around the pulley.

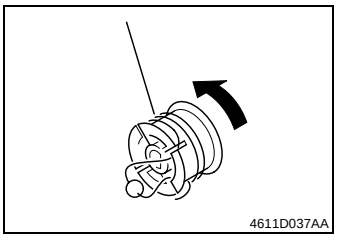


3. Wind the cable counterclockwise and load the ball into the cable pulley.
   With the Elevator Tray in the uppermost position, wind the cable about five turns.

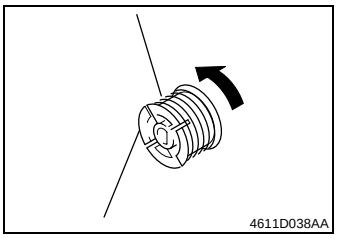


4. Wind the rest of the cable counterclockwise.
   With the Elevator Tray in the uppermost position, wind the cable about one turn.

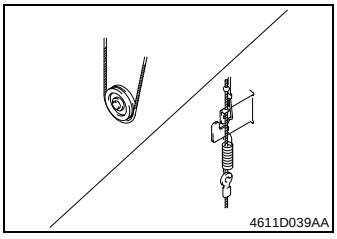


5. Hook the cable to the pulley.
6. Hook the cable to the spring.
7. Pass the cable through the spring and secure it to the hook.

# 14 ADJUSTMENTS

## 14-1. Check/Adjustment of the Punch Hole Position

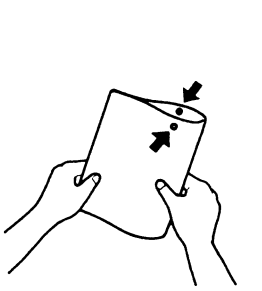


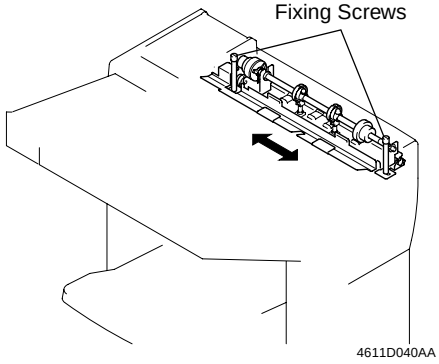


1. Set the copier into the Hole Punch mode and make a copy in the 1→1 setting.
2. Fold the copy in half and check to see if the punch holes are aligned (deviation should be within 2 mm).
3. If the holes are misaligned, loosen the two screws that secure the Punch Unit and slide the Punch Unit left or right as necessary. (Use the scale on the cover as a reference.)
4. Make a copy again and check for the correct punching position.

## 14-2. Adjustment of the Solenoids and Sensors

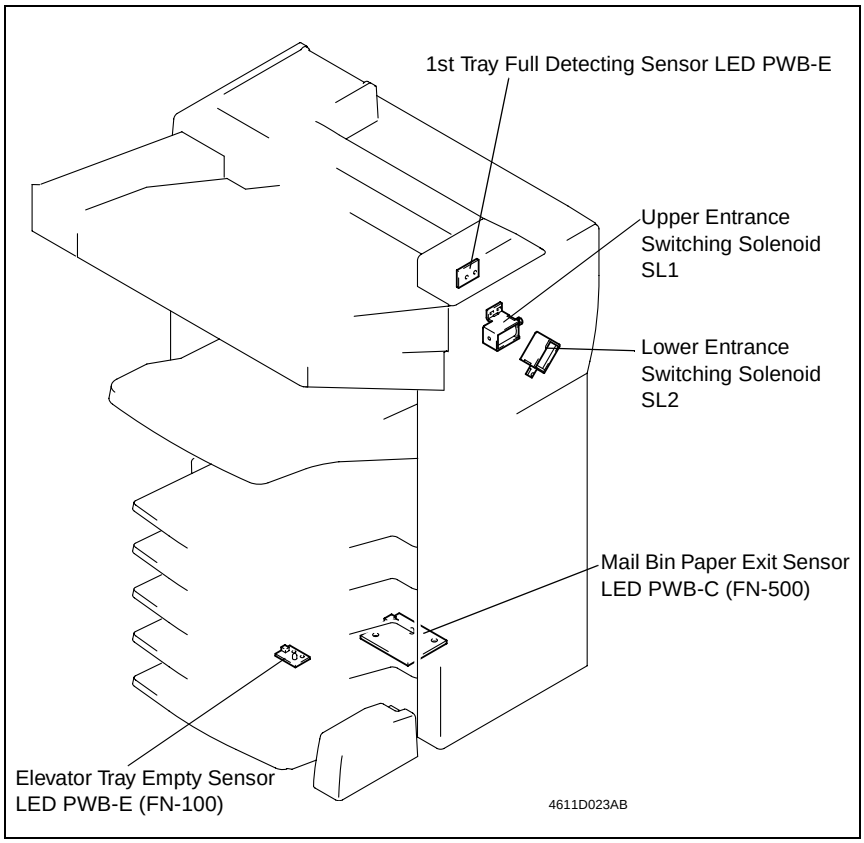


**(1) Adjustment of Upper Entrance Switching Solenoid SL1**

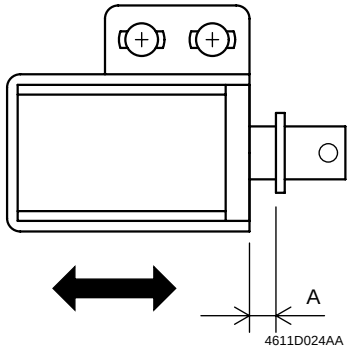


1. Loosen the two screws.
2. Move SL1 left and right so that dimension A measures 4 ±1 mm. Then, secure the two screws.

**(2) Adjustment of Lower Entrance Switching Solenoid SL2 (FN-500)**

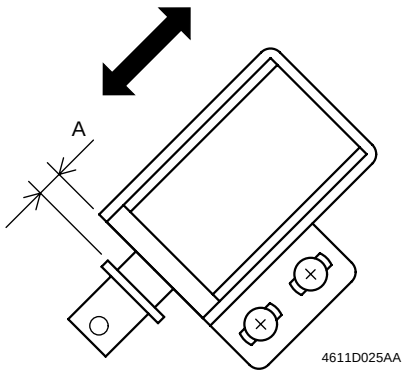


1. Loosen the two screws.
2. Move SL2 left and right so that dimension A measures 3.5 ±1 mm. Then, secure the two screws.

**(3) Sensor LED Output Adjustment**

- 1st Tray Full Detecting Sensor LED PWB-E
- Elevator Tray Empty Sensor LED PWB-E
- Mail Bin Paper Exit Sensor LED PWB-C

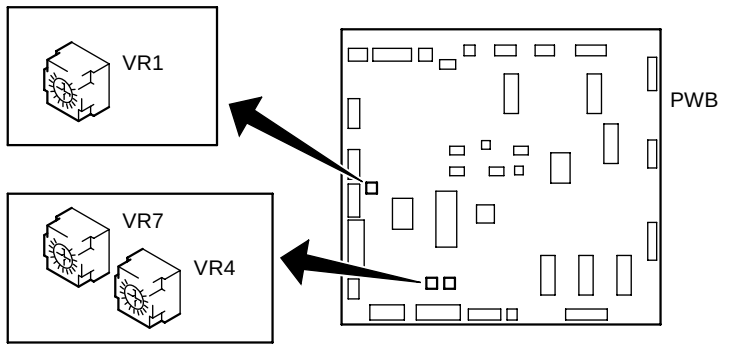


4611D033AA

1. Turn VR (1, 4, and 7) on PWB-A fully clockwise (0 ohms).
   - Mail Bin Paper Exit Sensor LED PWB-C : VR1
   - Elevator Tray Empty Sensor LED PWB-E : VR4
   - 1st Tray Full Detecting Sensor LED PWB-E : VR7
2. Block the sensor with a sheet of paper.
3. Measure the voltage on the print jack on PWB-A.
   - Mail Bin Paper Exit Sensor LED PWB-C : PJ9A-4A
   - Elevator Tray Empty Sensor LED PWB-E : PJ16A-11B
   - 1st Tray Full Detecting Sensor LED PWB-E : PJ16A-7B
4. Turn VR counterclockwise until the voltage reads 4.3V or more.
5. Remove the sheet of paper and check that the voltage becomes 0.8V or less.

# TROUBLESHOOTING

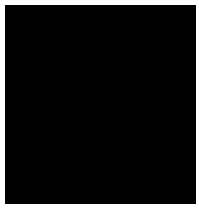

# 1 SENSOR CHECK

## 1-1. Sensor Check

- To ensure an easy and safe check for sensor operation, the Finisher allows the Tech. Rep. to determine if signals are properly input by checking the sensor input data when the copier and Finisher are in the standby state (including misfeed, malfunction, and closure failure conditions).

## 1-2. Sensor Check Procedures

1. When a misfeed or malfunction occurs, select the function in the following order: Tech. Rep. Mode → I/O Check → Output Option.
2. Check the input of the sensor that is probably defective.

(Example)
When a misfeed occurs in the Horizontal Transport Unit, Paper Sensor PC1 is considered to be defective:

A. Remove the sheet of misfed paper and reset the misfeed.
B. Select Tech. Rep. Mode → I/O Check → Output Option.
C. Check that the data for “Paper Passage” is “0” on the screen.
D. Block PC1 to check that the data changes from “0” to “1.”

| |
|---|
| Data changes : PC1 is operational.<br>Data does not change: PC1 is faulty. |

# 2 MISFEED DETECTION AND TROUBLESHOOTING PROCEDURES

## 2-1. Location of Misfeed Detecting Sensors

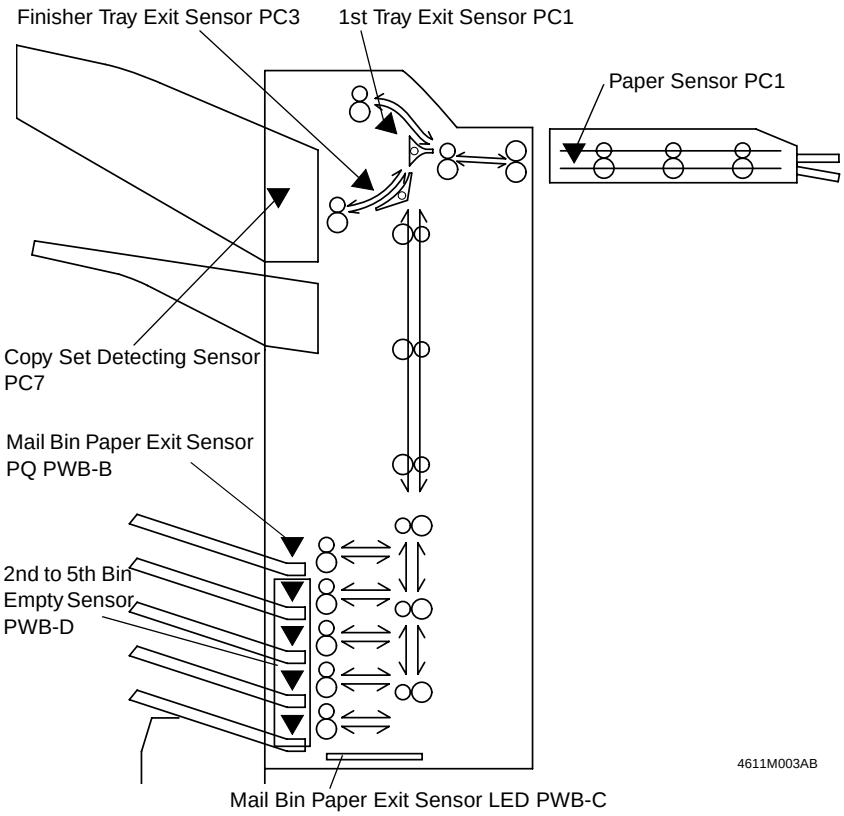

## 2-2. Misfeed Detection

- When a misfeed occurs, the Touch Panel of the copier gives the misfeed message, showing the misfeed location and places where paper exists.
- The misfeed display may be canceled by opening and closing the door of the Finisher.

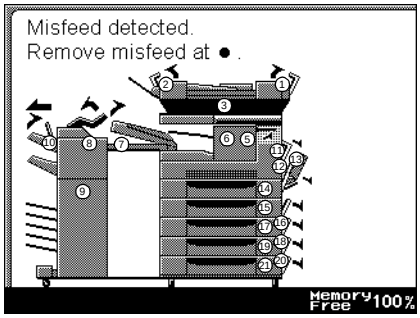


4611T001CA

| Blinking | Where a misfeed occurs |
|---|---|
| ON | Where paper exists |

| Display No. | Category | Detection Timing |
|---|---|---|
| 7 | Horizontal Transport Unit misfeed | Paper Sensor PC1 at the Horizontal Transport Unit is not blocked (L) even after the lapse of a given period of time after the leading edge of the copy has blocked (L) Exit Sensor PC3 of the copier. |
| 8 | Finisher transport section misfeed | • Paper Sensor PC1 at the Horizontal Transport Unit is not unblocked (H) even after the lapse of a given period of time after the leading edge of the copy has blocked (L) it.<br>• 1st Tray Exit Sensor PC1 is not blocked (H) even after the lapse of a given period of time after the leading edge of the copy has blocked (L) Paper Sensor PC1 at the Horizontal Transport Unit.<br>• Finisher Tray Exit Sensor PC3 is not blocked (H) even after the lapse of a given period of time after the leading edge of the copy has blocked (L) Paper Sensor PC1 at the Horizontal Transport Unit. |
| 8 | 1st Tray exit misfeed | 1st Tray Exit Sensor PC1 is not unblocked (L) even after the lapse of a given period of time after the leading edge of the copy has blocked (H) PC1. |
| 8 | Copy set exit misfeed | Copy Set Detecting Sensor PC7 is not unblocked (L) even after the lapse of a given period of time after a stapling sequence has been completed. |
| 8 | Staple misfeed | The Stapling Motor does not start turning backward even after the lapse of a given period of time after it has started turning forward. |

| Display No. | Category | Detection Timing |
|---|---|---|
| 9 | Mail Bin transport misfeed | • Mail Bin Paper Exit Sensor PWB-B/C or 2nd-5th Bin Empty Sensor PWB-D is not blocked (L) even after the lapse of a given period of time after the leading edge of the copy has blocked (L) Paper Sensor PC1.<br>• Mail Bin Paper Exit Sensor PWB-B/PWB-C is not unblocked (H) even after the lapse of a given period of time after the leading edge of the copy has blocked (L) it. |
| 10 | Finisher Tray exit misfeed | Finisher Tray Exit Sensor PC3 is not unblocked (L) even after the lapse of a given period of time after the leading edge of the copy has blocked (H). |

## 2-3. Troubleshooting Procedures

**(1) Horizontal Transport Unit Misfeed**

| Step | Check Item | Result | Action |
|---|---|---|---|
| 1 | Does the paper being used meet product specifications? | NO | Instruct the user to use paper that meets product specifications. |
| 2 | Is the paper curled, waved, or damp? | YES | Change the paper.<br>Instruct the user in how to store the paper. |
| 3 | Is the paper transport path dirty with foreign matter or deformed? | YES | Remove foreign matter; clean or change the defective part. |
| 4 | Are the rollers in the transport section dirty, deformed, or worn? | YES | Clean or change the defective roller. |
| 5 | Is Paper Sensor PC1 of the Horizontal Transport Unit operational, as checked through a sensor check? | YES | Change PWB-A. |
| | | NO | Check the actuator for operation and, if it is intact, change PC1. |

**(2) Finisher Transport Section Misfeed**

| Step | Check Item | Result | Action |
|---|---|---|---|
| 1 | Does the paper being used meet product specifications? | NO | Instruct the user to use paper that meets product specifications. |
| 2 | Is the paper curled, waved, or damp? | YES | Change the paper.<br>Instruct the user in how to store the paper. |
| 3 | Is the paper transport path dirty with foreign matter or deformed? | YES | Remove foreign matter; clean or change the defective part. |
| 4 | Are the rollers in the transport section dirty, deformed, or worn? | YES | Clean or change the defective roller. |
| 5 | Does the voltage across PJ11A-2 on PWB-A and GND change from DC24V to DC0V after a given period of time after the Start key has been pressed in the Non-Sort/Hole Punch mode? | YES | Make a stroke adjustment of Upper Entrance Switching Solenoid SL1 or change SL1. |
| | | NO | Change PWB-A. |
| 6 | Is 1st Tray Exit Sensor PC1 operational, as checked through a sensor check? | NO | Check the actuator for operation and, if it is intact, change PC1. |
| 7 | Is Finisher Tray Exit Sensor PC3 operational, as checked through a sensor check? | YES | Change PWB-A. |
| | | NO | Check the actuator for operation and, if it is intact, change PC3. |

**(3) 1st Tray Exit Misfeed**

| Step | Check Item | Result | Action |
|---|---|---|---|
| 1 | Does the paper being used meet product specifications? | NO | Instruct the user to use paper that meets product specifications. |
| 2 | Is the paper curled, waved, or damp? | YES | Change the paper.<br>Instruct the user in how to store the paper. |
| 3 | Is the paper transport path dirty with foreign matter or deformed? | YES | Remove foreign matter; clean or change the defective part. |
| 4 | Are the rollers in the transport section dirty, deformed, or worn? | YES | Clean or change the defective roller. |
| 5 | Is 1st Tray Exit Sensor PC1 operational, as checked through a sensor check? | YES | Change PWB-A. |
| | | NO | Check the actuator for operation and, if it is intact, change PC1. |

**(4) Copy Set Exit Misfeed**

| Step | Check Item | Result | Action |
|---|---|---|---|
| 1 | Does the paper being used meet product specifications? | NO | Instruct the user to use paper that meets product specifications. |
| 2 | Is the paper curled, waved, or damp? | YES | Change the paper.<br>Instruct the user in how to store the paper. |
| 3 | Is the paper transport path dirty with foreign matter or deformed? | YES | Remove foreign matter; clean or change the defective part. |
| 4 | Is Copy Set Detecting Sensor PC7 operational, as checked through a sensor check? | YES | Change PWB-A. |
| | | NO | Check the actuator for operation and, if it is intact, change PC7. |

**(5) Mail Bin Transport Misfeed**

| Step | Check Item | Result | Action |
|---|---|---|---|
| 1 | Does the paper being used meet product specifications? | NO | Instruct the user to use paper that meets product specifications. |
| 2 | Is the paper curled, waved, or damp? | YES | Change the paper.<br>Instruct the user in how to store the paper. |
| 3 | Is the paper transport path dirty with foreign matter or deformed? | YES | Remove foreign matter; clean or change the defective part. |
| 4 | A copy is stationary at the entrance to the bin. | YES | To step 8 |
| 5 | A copy is stationary near the entrance to the bin inside the Finisher. | YES | To step 7 |
| 6 | Does the voltage across PJ10A-2 on PWB-A and GND change from DC24V to DC0V after the lapse of a given period of time after the setting has been made to feed copies into the Mail Bin and the copy cycle has been started? | YES | Make a stroke adjustment of Lower Entrance Switching Solenoid SL2 or change SL2. |
| | | NO | Change PWB-A. |
| 7 | Does the voltage across each of the following pins and GND change from DC24V to DC0V after the lapse of a given period of time after the setting has been made to feed copies into the Mail Bin and the copy cycle has been started?<br>• 1st Mail Bin: PJ10A-4 on PWB-A<br>• 2nd Mail Bin: PJ10A-6 on PWB-A<br>• 3rd Mail Bin: PJ10A-8 on PWB-A<br>• 4th Mail Bin: PJ10A-10 on PWB-A | YES | Change 1st-4th Bin Entrance Switching Solenoid SL3-6. |
| | | NO | Change PWB-A. |
| 8 | Are Mail Bin Paper Exit Sensors PWB-B/C and 2nd-5th Bin Empty Sensor PWB-D operational, as checked through a sensor check? | YES | Change PWB-A. |
| | | NO | Change PWB-B, PWB-C, or PWB-D. |

**(6) Finisher Tray Exit Misfeed**

| Step | Check Item | Result | Action |
|---|---|---|---|
| 1 | Does the paper being used meet product specifications? | NO | Instruct the user to use paper that meets product specifications. |
| 2 | Is the paper curled, waved, or damp? | YES | Change the paper.<br>Instruct the user in how to store the paper. |
| 3 | Is the paper transport path dirty with foreign matter or deformed? | YES | Remove foreign matter; clean or change the defective part. |
| 4 | Is Finisher Tray Exit Sensor PC3 operational, as checked through a sensor check? | YES | Change PWB-A. |

**(7) Staple Misfeed**

| Step | Check Item | Result | Action |
|---|---|---|---|
| 1 | Is the Stapling Unit installed properly? | NO | Install it properly. |
| 2 | Is an overload being applied to the Stapling Motor? | YES | Check the drive coupling mechanism. |
| | | NO | Change the Stapling Unit or PWB-A. |

# 3 MALFUNCTION DETECTION AND TROUBLESHOOTING PROCEDURES

## 3-1. Malfunction Detection

Any of the following operation faults can be detected and the corresponding malfunction code shown on the copier Touch Panel.

✻ The malfunction detection can be reset by opening and closing the side cover of the copier.

| Malfunction Code | Description | Detection Timing |
|---|---|---|
| C0B00 | Transport Motor M1 drive malfunction | • At any time after M1 has been energized, the Lock signal remains HIGH for a given period of time.<br>• At any time after M1 has been deenergized, the Lock signal remains LOW for a given period of time. |
| C0B0F | Paper Entrance Switching Motor M1 drive malfunction | (In Non-Sort mode)<br>Non-Sort Tray Transport Position Detecting Sensor PC2 does not go HIGH even after the lapse of a given period of time after M1 has been energized (to swing the Path Switching Guide downward).<br>(In mode other than Non-Sort)<br>Finisher Transport Position Detecting Sensor PC3 does not go LOW even after the lapse of a given period of time after M1 has been energized (to swing the Path Switching Guide upward). |
| C0B30 | CD Aligning Motor M4 drive malfunction | CD Aligning Home Position Sensor PC5 does not go HIGH even after the lapse of a given period of time after M4 has been energized (to return the CD Aligning Plate to its home position). |
| C0B38 | Shift Motor M5 drive malfunction | Shift Sensor PC6 does not go HIGH even after the lapse of a given period of time after M5 has been energized (to return the Shift Reference Plate to its home position). |
| C0B4D | Paper Holding Tray Motor M6 drive malfunction | • Paper Holding Tray Home Position Sensor PC9 does not go LOW even after the lapse of a given period of time after M10 has been energized (to let the Paper Holding Tray start its retracting motion).<br>• PC9 does not go HIGH even after the lapse of a given period of time after M10 has been energized (to let the Paper Holding Tray start its home-returning motion). |

| Malfunction Code | Description | Detection Timing |
|---|---|---|
| C0B4E | Finisher Tray Motor M8 drive malfunction | • Finisher Tray Home Position Sensor PC2 does not go LOW even after the lapse of a given period of time after M8 has been energized (to let the Finisher Tray start its retracting motion).<br>• PC2 does not go HIGH even after the lapse of a given period of time after M8 has been energized (to let the Finisher Tray start its home-returning motion). |
| C0B50 | Stapling Motor drive malfunction | • The Home Position Sensor does not go HIGH even after the lapse of a given period of time after the Stapling Motor has been energized (to start a stapling sequence).<br>• The Home Position Sensor does not go LOW even after the lapse of a given period of time after the Stapling Motor has been energized (to start a home-returning motion). |
| C0BA0 | Elevator Motor M9 drive malfunction | • Elevator Tray Upper Surface Sensor PC8 does not go HIGH even after the lapse of a given period of time after M9 has been energized (to let the Elevator Tray start the ascent motion).<br>• The value of input to Elevator Tray Retract Position Sensor PC12 does not reach the specified level for the tray's retracted position even after the lapse of a given period of time after M9 has been energized. |

## 3-2. Troubleshooting Procedures

**(1) C0B00**

| Step | Check Item | Result | Action |
|---|---|---|---|
| 1 | Does Transport Motor M1 start turning after Power Switch is turned ON? | YES | Check the rollers and gears for overload. If they are checked okay, go to step 4. |
| 2 | Is the voltage across PJ9A-2 on PWB-A and GND DC24V when the Power Switch is turned ON? | NO | Change PWB-A. |
| 3 | Is the voltage across PJ9A-3 on PWB-A and GND DC5V when the Power Switch is turned ON? | NO | Change PWB-A. |
| 4 | Does the voltage across PJ9A-3 on PWB-A and GND change from DC5V to DC0V after Power Switch is turned ON? | NO | Change PWB-A. |
| 5 | Does the voltage across PJ9A-4 on PWB-A and GND remain DC5V while M1 is turning? | YES | Change M1. |

**(2) C0B0F**

| Step | Check Item | Result | Action |
|---|---|---|---|
| 1 | Does the path switching mechanism of the Horizontal Transport Unit go up when the Finisher is connected to the copier? | YES | Change PWB-A. |
| 2 | Is the Horizontal Transport Unit connected in position? | NO | Place it in position and check the Drive Coupling Lever for correct function. |
| 3 | Is Finisher Transport Position Detecting Sensor PC3 operational, as checked through a sensor check (Horizontal Position)? | NO | Change PC3. |
| 4 | Is Non-Sort Tray Transport Position Detecting Sensor PC2 operational, as checked through a sensor check (Non-Sort Position)? | NO | Change PC2. |
| 5 | Does the voltage across PJ14A-2 on PWB-A and GND instantaneously change from LOW to HIGH when the Finisher is connected to the copier? | YES | Change Paper Entrance Switching Motor M1, or check the M1 drive mechanism. |
| | | NO | Change PWB-A. |

**(3) C0B30**

| Step | Check Item | Result | Action |
|---|---|---|---|
| 1 | Is CD Aligning Home Position Sensor PC5 operational, as checked through a sensor check (Paper Aligning Bar Home)? | NO | Change PC5. |
| 2 | Turn OFF the Power Switch, move the CD Aligning Plate out of its home position, and then turn ON the Power Switch (to let the plate start its home-returning motion). Is CD Aligning Motor M4 energized at this time? | YES | Change PWB-A or M4. |
| | | NO | Change PWB-A. |

**(4) C0B38**

| Step | Check Item | Result | Action |
|---|---|---|---|
| 1 | Is Shift Sensor PC6 operational, as checked through a sensor check (Paper Standard Board Home)? | NO | Change PC6. |
| 2 | Turn OFF the Power Switch, move the Shift Reference Plate out of its home position, and then turn ON the Power Switch (to let the plate start its home-returning motion). Is Shift Motor M5 energized at this time? | NO | Change PWB-A or M5. |
| | | YES | Change PWB-A. |

**(5) C0B4D**

| Step | Check Item | Result | Action |
|---|---|---|---|
| 1 | Is Paper Holding Tray Home Position Sensor PC9 operational, as checked through a sensor check (Assist Tray Home)? | NO | Change PC9. |
| 2 | Turn OFF the Power Switch, move the Paper Holding Tray out of its home position, and then turn ON the Power Switch (to let the tray start its home-returning motion). Is Paper Holding Tray Motor M10 energized at this time? | NO | Change PWB-A or M10. |
| | | YES | Change PWB-A. |

**(6) C0B4E**

| Step | Check Item | Result | Action |
|---|---|---|---|
| 1 | Is Finisher Tray Home Position Sensor PC2 operational, as checked through a sensor check (Home)? | NO | Change PC2. |
| 2 | Turn OFF the Power Switch, move the Finisher Tray out of its home position, and then turn ON the Power Switch (to let the tray start its home-returning motion). Is Finisher Tray Motor M8 energized at this time? | NO | Change PWB-A or M8. |
| | | YES | Change PWB-A. |

**(7) C0B50**

| Step | Check Item | Result | Action |
|---|---|---|---|
| 1 | Is the Stapling Motor overloaded? | YES | Check the drive coupling mechanism. |
| | | NO | Change the Stapling Unit or PWB-A. |

**(8) C0BA0**

| Step | Check Item | Result | Action |
|---|---|---|---|
| 1 | Is Elevator Tray Upper Surface Sensor PC8 operational, as checked through a sensor check (Raised)? | NO | Change PC8. |
| 2 | Is Elevator Tray Retract Position Sensor PC12 operational, as checked through a sensor check? | NO | Change PC12. |
| 3 | Does the voltage across PJ6A-1 on PWB-A and GND change from LOW to HIGH after the Start key has been pressed in the Sort mode? | YES | Check the drive coupling mechanism and change Elevator Motor M9. |
| | | NO | Change PWB-A. |

## 1-1. Non-Shift Mode(Feeding Out One Sheet of Paper)

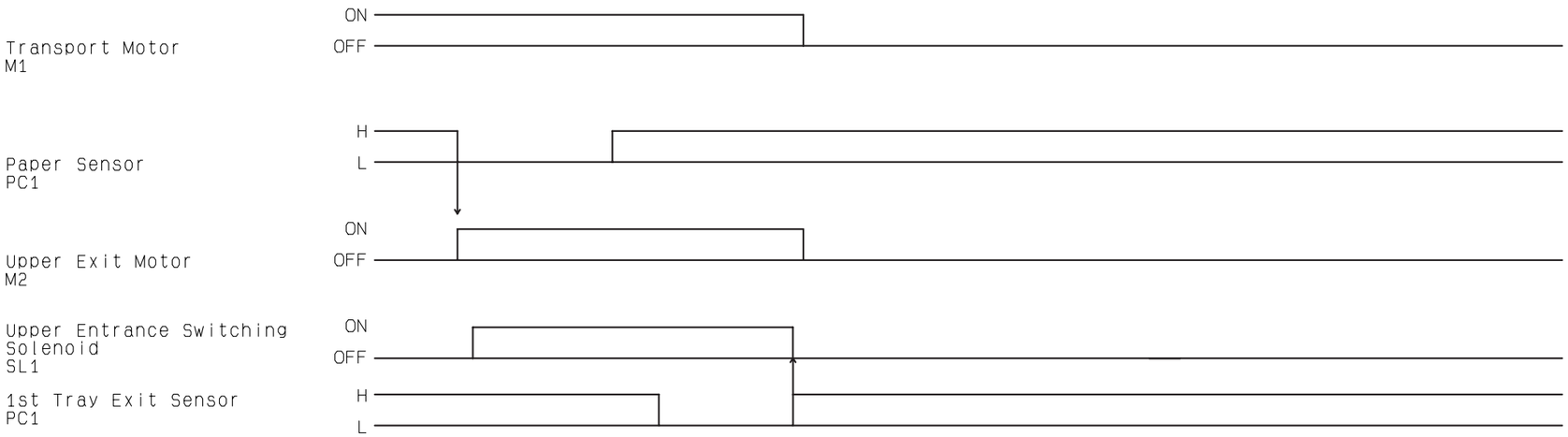


## 1-2. Shift Mode(Feeding Out One Sheet of Paper)

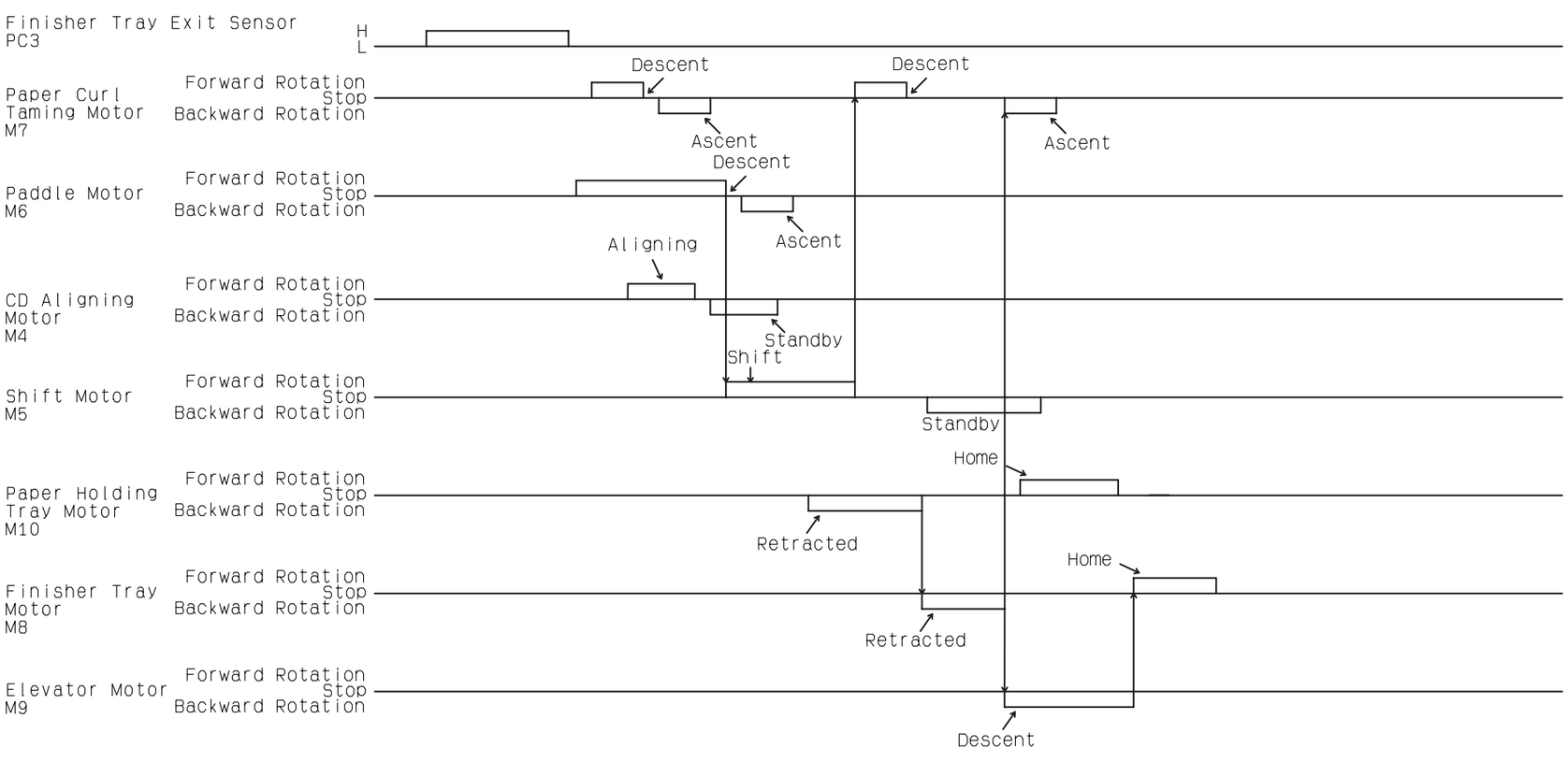


4612-B301-0A

# PWB-A
# 制御基板/
# Control Board

| | |
|---|---|
| DWG.NO. | 4612-C001-0A |
| TITLE | WIRING DIAGRAM |
| MODEL | FN-100/FN-500 |
| VOLTAGE | From the copier |
| EFFECTIVE MACHINE NO. | XX0201 AND ONWARD |
| DATE ISSUED | Dec.1998 |

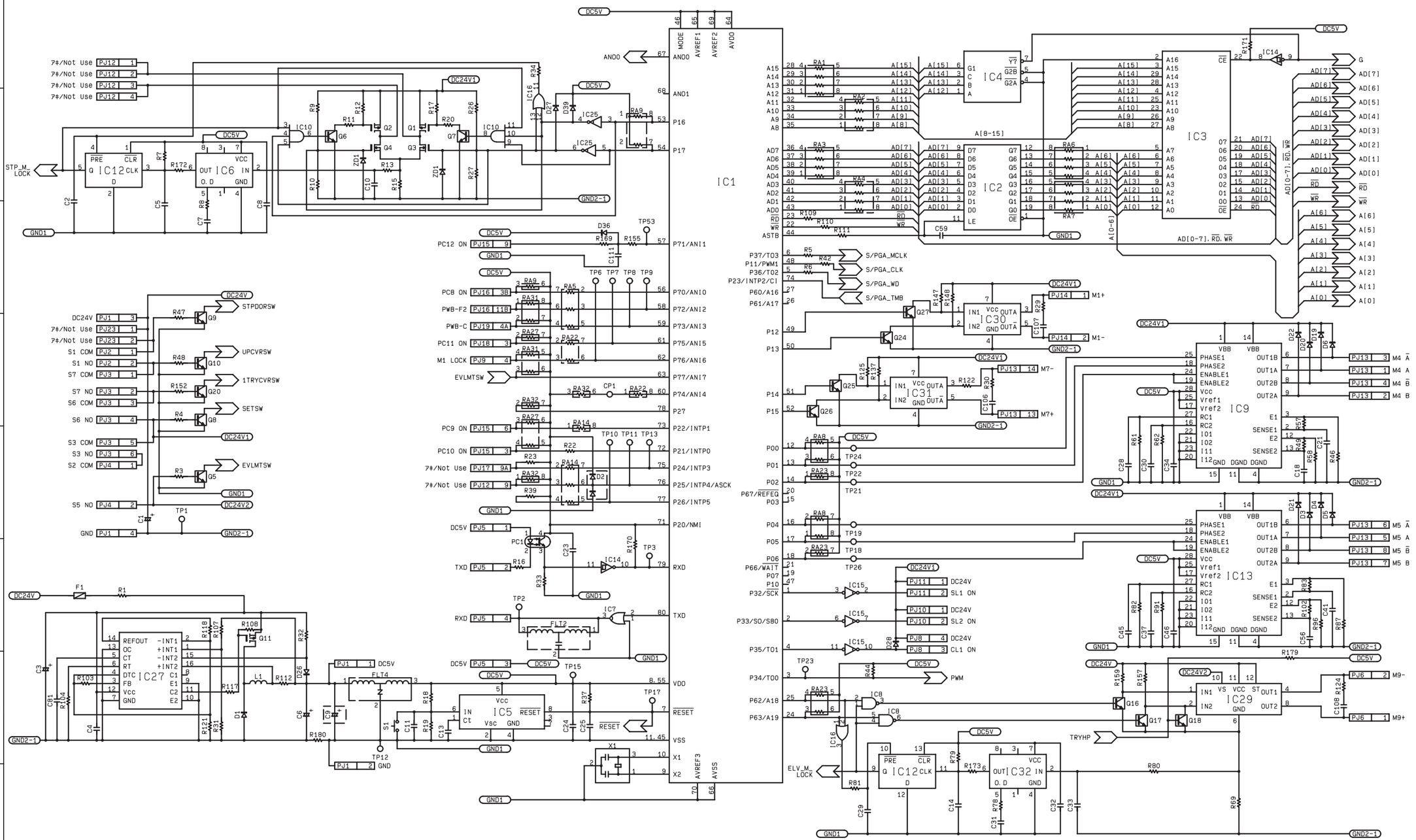


| | |
|---|---|
| DWG.NO. | 4612-C201-0A |
| TITLE | CIRCUIT DIAGRAM PWB-A 1/3 |
| MODEL | FN-100/FN-500 |
| VOLTAGE | From the copier |
| EFFECTIVE MACHINE NO. | XX0201 AND ONWARD |
| DATE ISSUED | Dec.1998 |

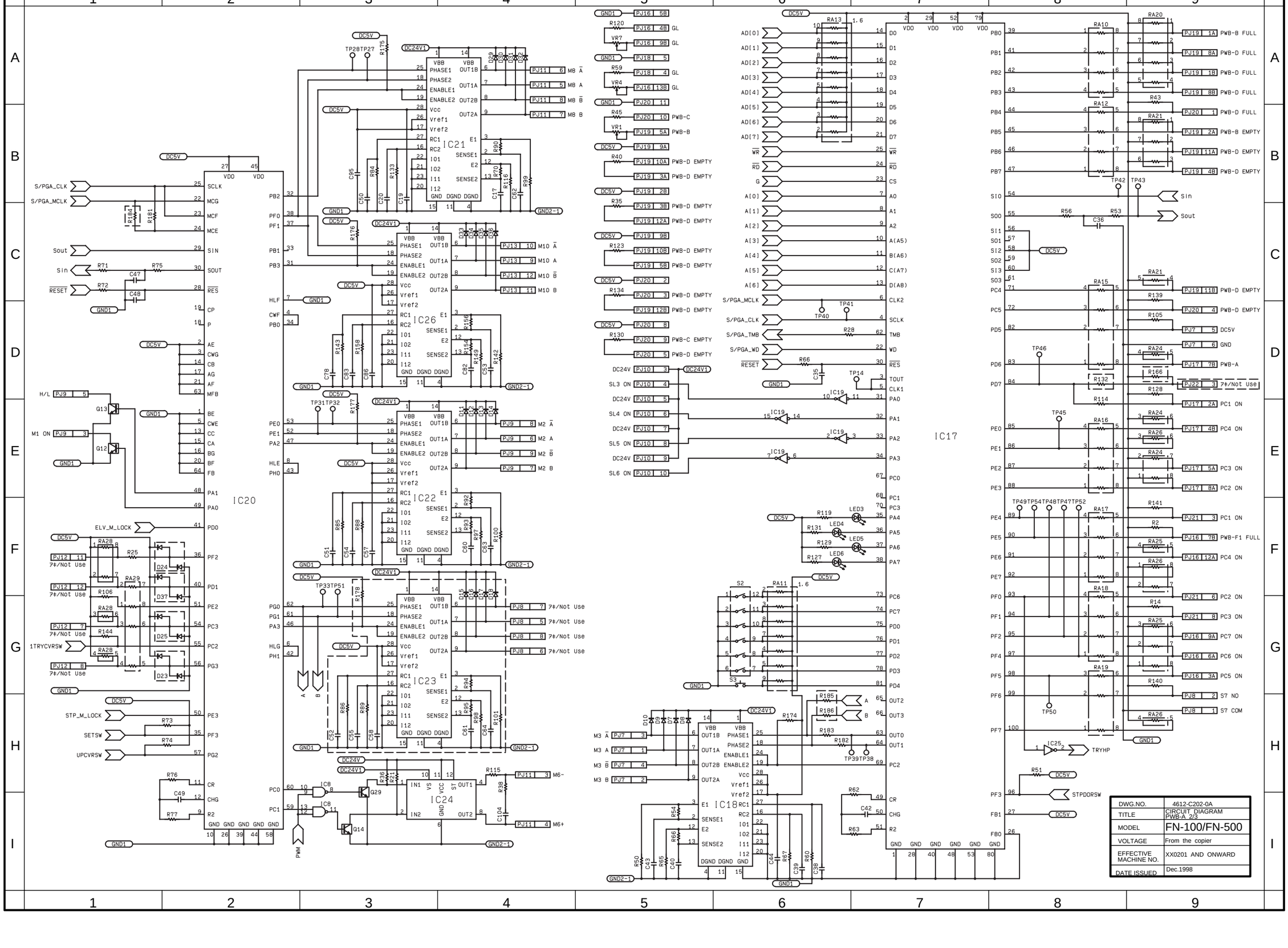


| | |
|---|---|
| DWG.NO. | 4612-C202-0A |
| TITLE | CIRCUIT DIAGRAM PWB-A 2/3 |
| MODEL | FN-100/FN-500 |
| VOLTAGE | From the copier |
| EFFECTIVE MACHINE NO. | XX0201 AND ONWARD |
| DATE ISSUED | Dec.1998 |

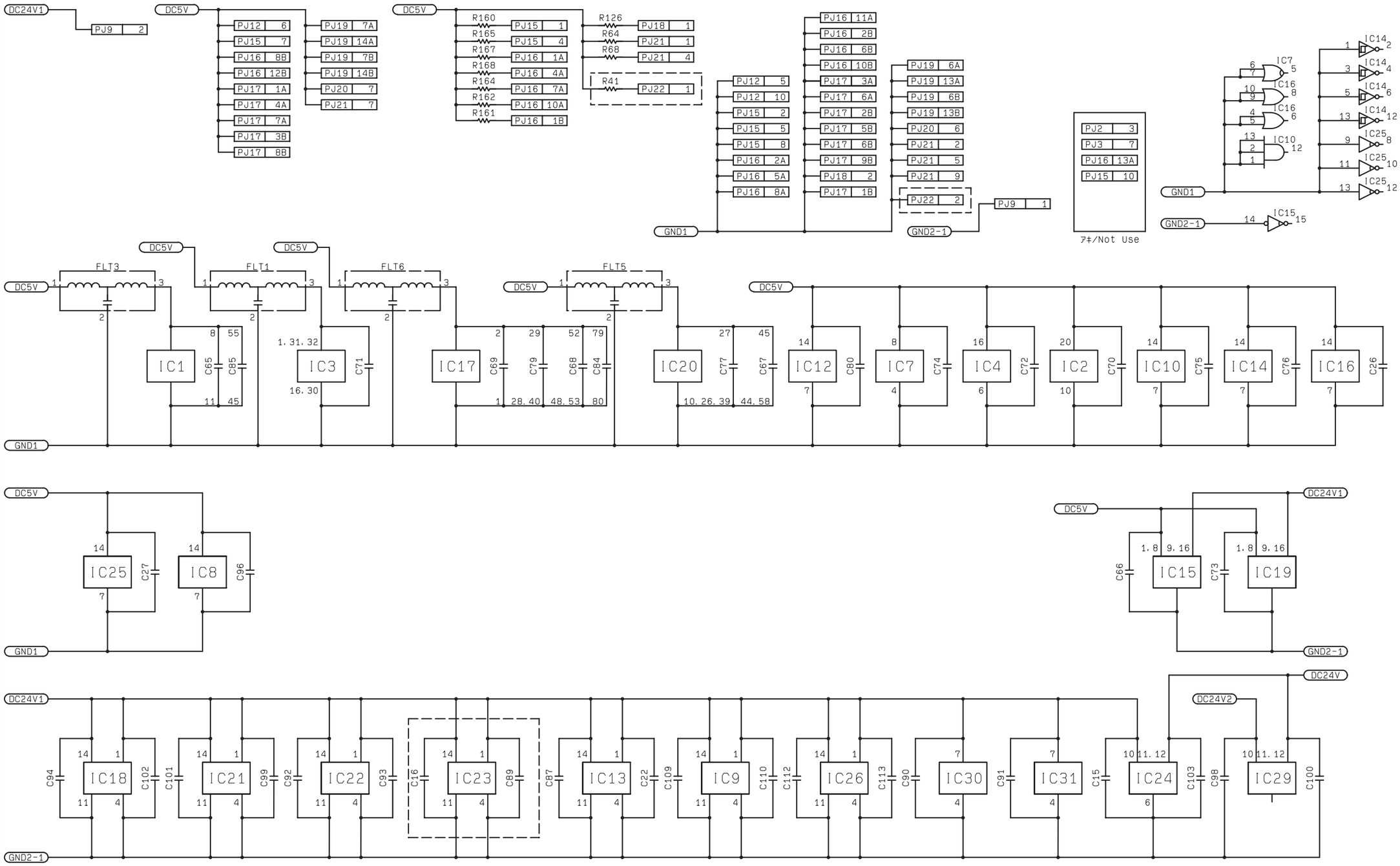


| | |
|---|---|
| DWG.NO. | 4612-C203-0A |
| TITLE | CIRCUIT DIAGRAM PWB-A 3/3 |
| MODEL | FN-100/FN-500 |
| VOLTAGE | From the copier |
| EFFECTIVE MACHINE NO. | XX0201 AND ONWARD |
| DATE ISSUED | Dec.1998 |