FrameMaker Ver.5.5(PC) AD-10 OPTION FOR Di350
98.08.25

AD-10

SERVICE MANUAL



MINOLTA

14413

CONTENTS

GENERAL, MECHANICAL/ELECTRICAL

1. SPECIFICATIONS M-1
2. PARTS IDENTIFICATION M-2
3. CROSS-SECTIONAL VIEW M-2
4. DRIVE SYSTEM M-3
5. ELECTRICAL COMPONENTS LAYOUT M-3
6. MECHANICAL OPERATIONS M-4
   - 6-1. Switchback Mechanism M-4
     - (1) Switchback Operation M-4
     - (2) Paper Exit Roller Drive Coupling Mechanism M-4
     - (3) Switchback Motor Control M-5
   - 6-2. Transport and Duplex Paper Take-Up Mechanism M-5
     - (1) Transport and Duplex Paper Take-Up Operation M-5
     - (2) Duplex Unit Transport Motor Control M-5
   - 6-3. 2-Sided Copying Schemes M-6
     - (1) Operation of Single-Sheet 2-Sided Copying M-6
     - (2) Operation of Double-Sheet 2-Sided Copying M-8

DIS/REASSEMBLY, ADJUSTMENT

1. DISASSEMBLY D-1
   - 1-1. Removal of the Duplex Unit D-1
   - 1-2. Cleaning of Duplex Unit Transport Roller 1 and 2 and Duplex Unit Transport Roll 1 and 2 ..... D-1
   - 1-3. Cleaning of Exhaust Vent area D-2
2. ADJUSTMENT D-2
   - 2-1. Duplex CD Registration Adjustment (Printer) D-2

MISFEED DETECTION

1. MISFEED DETECTION T-1
   - 1-1. Misfeed Detecting Sensors Layout T-1
   - 1-2. Types of Misfeed and Misfeed Detection Timings T-1

GENERAL, MECHANICAL/ELECTRICAL



1 SPECIFICATIONS

Type	: Switchback and Circulating Duplex Unit
Installation	: Mounted on the right side door of copier
Type of Paper	: Plain paper (60 to 90 g/m² or 16 to 24 lbs.), recycled paper (60 to 90 g/m² or 16 to 24 lbs.)
Paper Size	: A5L/C to A3L or 5-1/2" × 8-1/2"L/C to 11" × 17"L (L: Lengthwise; C: Crosswise)
Registration	: Center
Power Requirements	: DC24V ±10%, DC5V ±10% (supplied from copier)
Power Consumption	: 21W or less
Dimensions	: 55 (W) × 415 (D) × 255 (H) or 2-1/4" (W) × 16-1/4" (D) × 10" (H)
Weight	: 1.8 kg or 4 lbs.
Environmental Requirements	: Same as copier

2 PARTS IDENTIFICATION

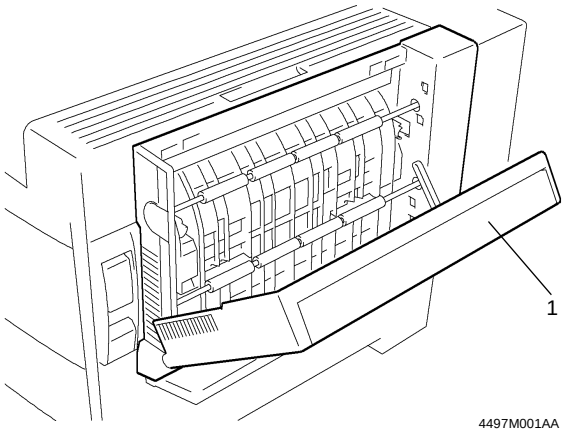

1. Duplex Unit Door

3 CROSS-SECTIONAL VIEW

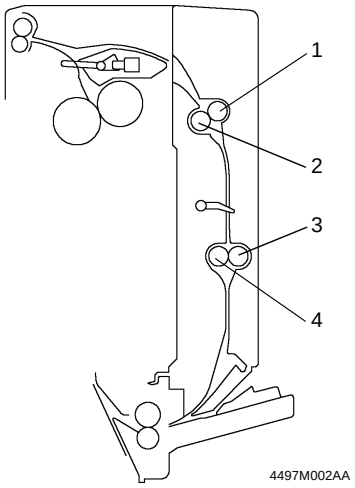

1. Duplex Unit Transport Roller 1
2. Duplex Unit Transport Roll 1
3. Duplex Unit Transport Roller 2
4. Duplex Unit Transport Roll 2

4 DRIVE SYSTEM

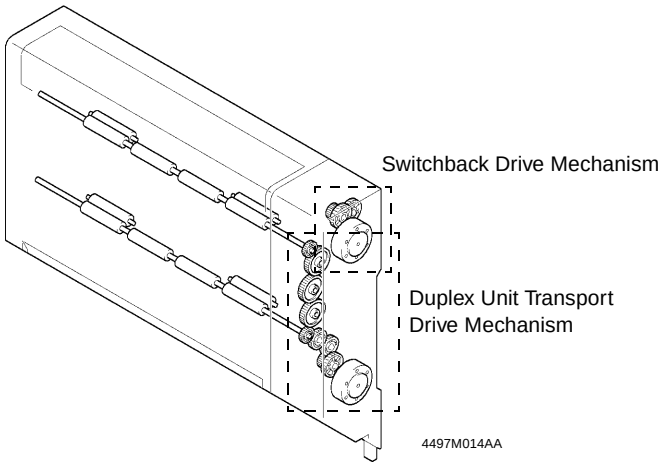

5 ELECTRICAL COMPONENTS LAYOUT

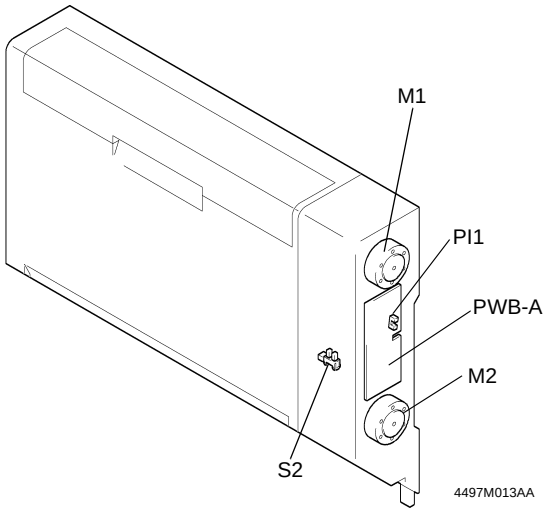

Symbol	Name	Symbol	Name
PWB-A	Duplex Main Board	S2	Duplex Unit Door Set Sensor
M1	Switchback Motor	PI1	Duplex Unit Transport Sensor (in PWB-A)
M2	Duplex Unit Transport Motor		

6 MECHANICAL OPERATIONS

6-1. Switchback Mechanism

(1) Switchback Operation

The Paper Exit Roller reverses the direction of feeding the 1-sided copy into the Duplex Unit (switchback operation). This switchback operation by the Paper Exit Roller is accomplished by changing the direction of rotation of the Switchback Motor whose drive is transmitted via a gear train. When the motor is turned forward, the paper is fed out of the copier. When the motor is turned backward, the paper is fed into the Duplex Unit.

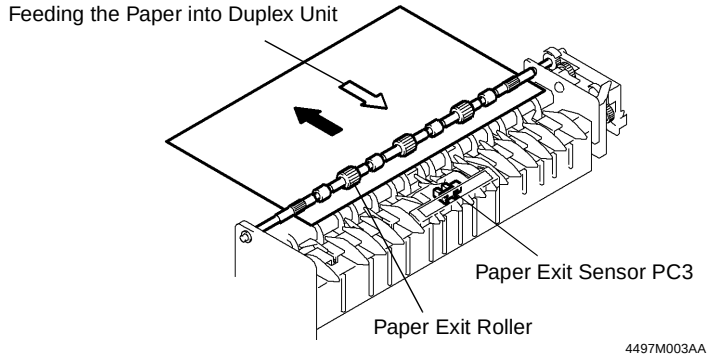

(2) Paper Exit Roller Drive Coupling Mechanism

When the Duplex Unit is mounted, the tip of the Duplex Unit Lever raises the Idle Lever to disconnect the drive from the copier (Fusing Roller) and, instead, provides the Paper Exit Roller with the drive from the Switchback Motor.

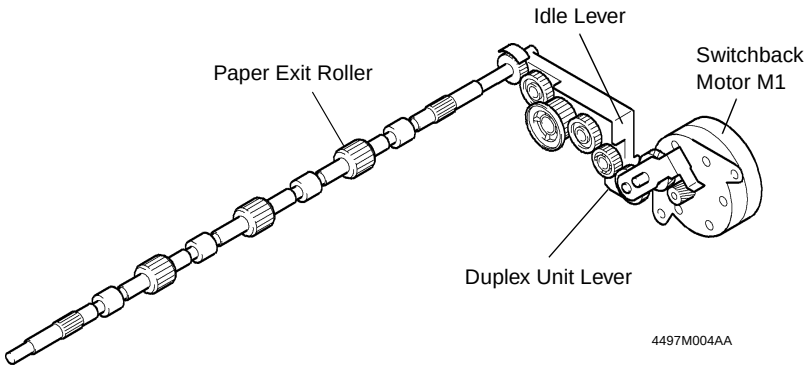

(3) Switchback Motor Control

The Switchback Motor is a two-phase stepping motor. Its direction of rotation and speed are controlled by applying pulse signals output from pins 1 to 4 of PJ3A to the motor.

6-2. Transport and Duplex Paper Take-Up Mechanism

(1) Transport and Duplex Paper Take-Up Operation

The paper fed into the Duplex Unit is transported through, and eventually fed out of, the Duplex Unit before being fed to the paper take-up mechanism of the copier.
The transport and Duplex paper take-up operations are performed by two pairs of Duplex Unit Transport Rollers/Rolls and the Manual Feed Paper Take-Up Roll of the copier. The use of the latter contributes to smaller floor space requirements. The drive for these operations comes from the Duplex Unit Transport Motor and Manual Feed Paper Take-Up Clutch.

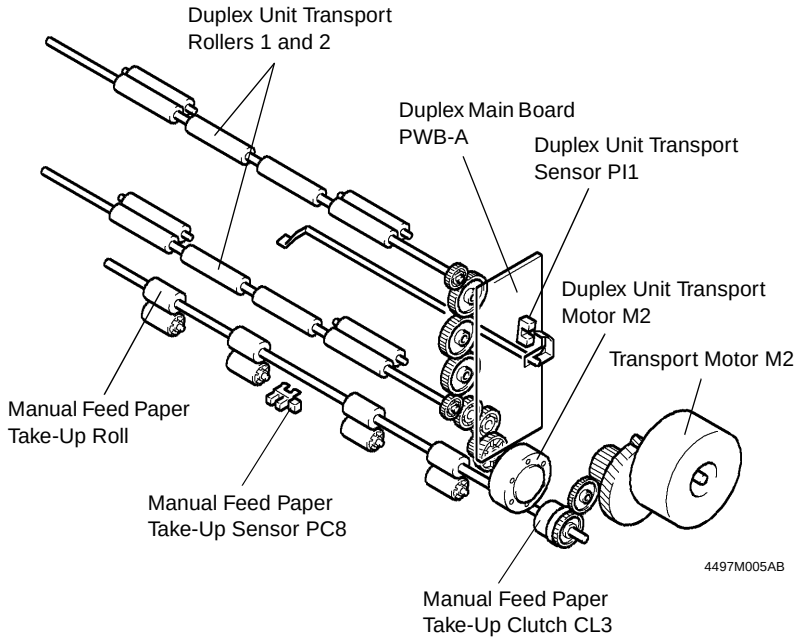

(2) Duplex Unit Transport Motor Control

The Duplex Unit Transport Motor is a two-phase stepping motor. Its speed is controlled by applying pulse signals output from pins 1 to 4 of PJ2A to the motor.

6-3. 2-Sided Copying Schemes

The following two 2-sided copying schemes are available.
Note, however, that the paper size (in the feeding direction) that is applicable to double-sheet 2-sided copying is Letter crosswise (215.9 mm) or smaller.

- 2-Sided Copying Schemes
  - Single-sheet 2-sided copying
  - Double-sheet 2-sided copying

(1) Operation of Single-Sheet 2-Sided Copying

1. A sheet of paper is taken up and fed in and the image of the second page is printed.
2. Just before the 1-sided copy moves past the Paper Exit Roller, the direction of rotation of the Paper Exit Roller is reversed and the 1-sided copy is transported towards the Duplex Unit.
3. The 1-sided copy being transported through the Duplex Unit is fed into the copier without being stopped.
4. The image of the first page is printed on the 1-sided copy fed out of the Duplex Unit and the resultant 2-sided copy is fed towards the paper exit section of the copier.
5. As the 2-sided copy is being fed out of the copier, the next sheet of paper is taken up and fed in for the printing of the image of the fourth page.
   (Steps 2 through 5 are then repeated.)

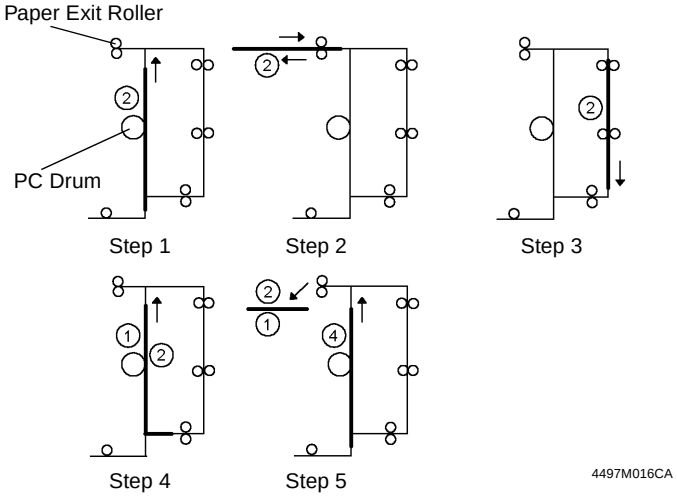

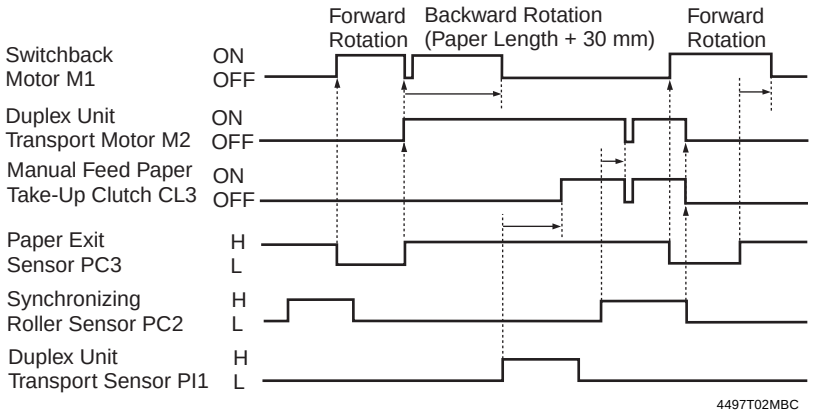

✻ When the paper moves a distance of about 20 mm after it has unblocked (H) the Synchronizing Roller Sensor, both Duplex Unit Transport Motor M2 and Manual Feed Paper Take-Up Clutch CL3 are temporarily deenergized. (The period of time during which M2 and CL3 are kept deenergized varies depending on the Image Synchronizing signal output timing.

(2) Operation of Double-Sheet 2-Sided Copying

1. The first sheet of paper is taken up and fed in and the image of the second page is printed.
2. Just before the 1-sided copy moves past the Paper Exit Roller, the direction of rotation of the Paper Exit Roller is reversed and the 1-sided copy is transported towards the Duplex Unit. At the same time, the second sheet of paper is taken up and fed in.
3. At the same time when the image of the fourth page is printed on the second sheet of paper, the first 1-sided copy is transported through the Duplex Unit. Because of the Duplex paper take-up timing involved, the first 1-sided copy is temporarily stopped at a point 20 mm before the Manual Feed Take-Up Roll; but it is soon fed out of the Duplex Unit.
4. The image of the first page is printed on the first 1-sided copy fed out of the Duplex Unit. At the same time, the second 1-sided copy is reversed at the paper exit section of the copier and transported towards the Duplex Unit. It is then fed out of the Duplex Unit without being stopped.
5. The image of the third page is printed on the second 1-sided copy.
6. As the second 2-sided copy is fed towards the paper exit section of the copier and as it is being fed out of the copier, the third sheet of paper is taken up and fed in for the printing of the image of the sixth page.
   (Steps 2 through 6 are then repeated.)

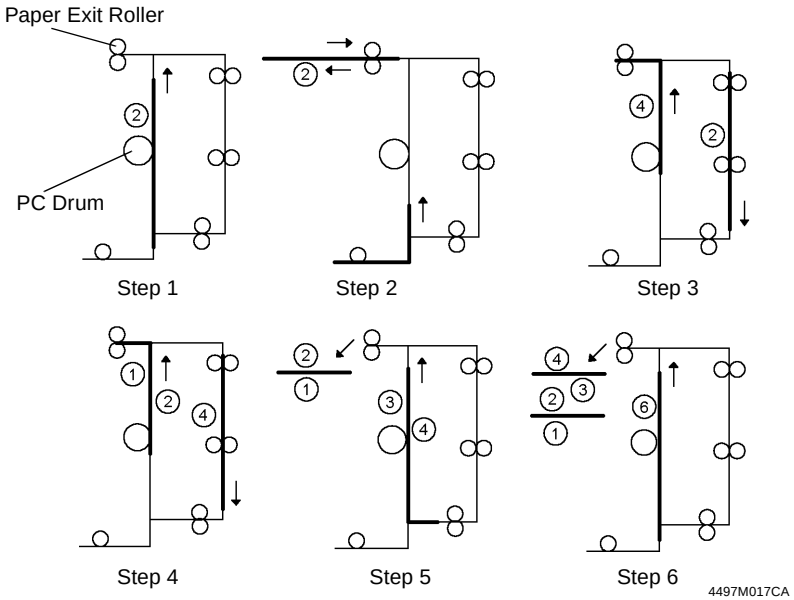

DIS/REASSEMBLY, ADJUSTMENT



1 DISASSEMBLY

1-1. Removal of the Duplex Unit

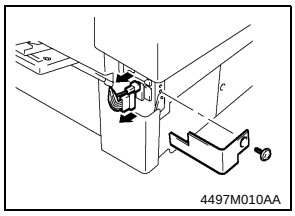

1. Remove the wiring cover (one screw).
2. Unplug the connectors (two).

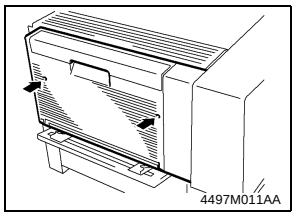

3. Remove the Duplex Unit (two screws).

1-2. Cleaning of Duplex Unit Transport Roller 1 and 2 and Duplex Unit Transport Roll 1 and 2

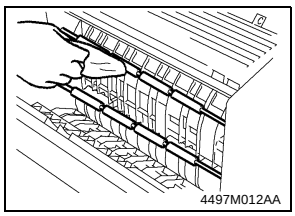

Wipe the surfaces of Duplex Unit Transport Roller 1 and 2 and Duplex Unit Transport Roll 1 and 2 clean with a soft cloth dampened with alcohol.

1-3. Cleaning of Exhaust Vent area

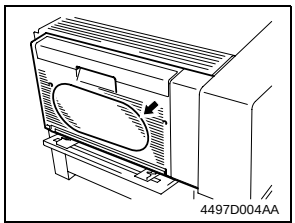

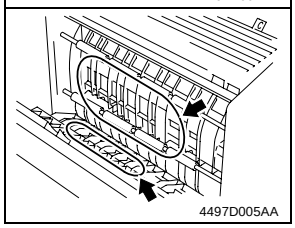

1. Wipe the surface of the Exhaust Vent areas clean with a soft cloth dampened with alcohol.

2 ADJUSTMENT

2-1. Duplex CD Registration Adjustment (Printer)

Requirement:

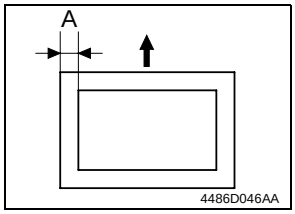

First perform the adjustments listed below. The make a test copy and use it as the original to make a 2-sided copy. Dimension A on the 2-sided copy should be adjusted to meet specifications.

1. CD registration for all paper sources and FD registration of the printer.
2. CD and FD registration of the IR.

Specifications	Adjustment Mode	Setting Range
A4C 10.0 ± 3.0 mm Letter C 10.0 ± 3.0 mm	Registration CD	-4 to +4

NOTE:
This adjustment should be made whenever the PH has been replaced with a new one.

For the adjustment procedures, see ADJUSTMENT in the SERVICE MANUAL for the copier.

MISFEED DETECTION



1 MISFEED DETECTION

1-1. Misfeed Detecting Sensors Layout

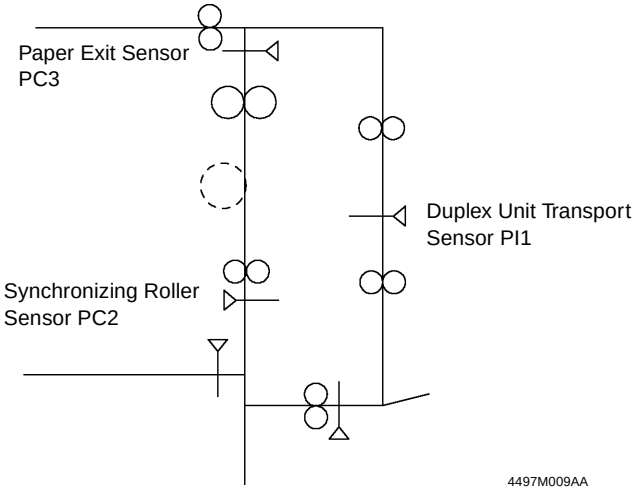

1-2. Types of Misfeed and Misfeed Detection Timings

Type	Detection Timing
Paper left	The output from Duplex Unit Transport Sensor PI1 is blocked (L) when the copier Power Switch is turned ON or a misfeed is reset.
Paper take-up failure	1. Synchronizing Roller Sensor PC2 is unblocked (H) at a shorter than normal time after a Duplex paper take-up sequence has started. 2. Synchronizing Roller Sensor PC2 is not unblocked (H) within a given period of time after a Duplex paper take-up sequence has started.
Paper leading edge detection during transport through Duplex Unit	Duplex Unit Transport Sensor PI1 is not blocked (H) within a given period of time after Paper Exit Sensor PC3 has been unblocked (H).