FrameMaker Ver.5.5(PC) AF-6/AF-7 OPTION FOR Di350
98.11.09

AF-6/AF-7

SERVICE MANUAL

MINOLTA

14413

CONTENTS

GENERAL, MECHANICAL/ELECTRICAL

1. SPECIFICATIONS M-1
2. COMPONENTS IDENTIFICATION M-2
3. CROSS-SECTIONAL VIEW M-3
4. DRIVE SYSTEM M-4
5. ELECTRICAL COMPONENT LAYOUT M-5
6. DESCRIPTION OF MODES M-6
   - 6-1. 1-Sided Original Mode M-6
   - 6-2. Mixed Original Mode M-6
7. DOCUMENT TAKE-UP/FEEDING MECHANISM M-7
   - 7-1. Document Take-Up Mechanism M-7
   - 7-2. Document Separating Mechanism M-8
8. DOCUMENT TRANSPORT/EXIT MECHANISM M-9
   - 8-1. Document Transport Mechanism M-9
   - 8-2. Document Exit Mechanism M-9
   - 8-3. Document Size Detection M-10
   - 8-4. Raised/Lowered Position Detection Mechanism M-10

TECH. REP. MODE

1. OUTLINE OF THE TECH. REP. MODE S-1
2. SENSOR CHECK S-1

DIS/REASSEMBLY, ADJUSTMENT

1. DISASSEMBLY D-1
   - 1-1. Removal of the Exterior Covers D-1
   - 1-2. Removal of the Scanner Unit D-1
   - 1-3. Removal of the Separator Roller Assy D-2
2. ADJUSTMENT D-3
   - 2-1. Adjustment of the Scanning Start Position in the Main/Sub Scanning Direction D-3
   - 2-2. Adjustment of the Scanning Zoom Ratio in the Main/Sub Scanning Direction D-4

TROUBLESHOOTING

1. MISFEED TROUBLESHOOTING PROCEDURES T-1

GENERAL, MECHANICAL/ELECTRICAL

1 SPECIFICATIONS

Name	:	Automatic Document Feeder
Installation	:	Screwed to the copier
Type of Document	:	Plain paper
Detectable Document Sizes	:	Metric Areas: A5L/C, A4L/C, B5L/C, A3L, Foolscap Inch Areas: 5-1/2”×8-1/2”L/C, 8-1/2”×11”L/C, 8-1/2”×14”L, 11"×17”L, 10-1/8”×14”L
Capacity	:	70 sheets max. (50 sheets max when Mix Original Mode): 52.3~81.4 g/m^2
Alignment	:	Rear Document Edge Guide
Document Loading	:	Face up
Document Exchange Speed	:	AF-6: 18 sheets/min., 25 sheets/min. (A4C or 8-1/2”×11” C) AF-7: 35 sheets/min. (A4C or 8-1/2”×11” C)
Modes	:	1-Sided Original Mixed Original (set with User’s Choice of the copier)
Power Source	:	DC24V, DC5V (supplied from the copier)
Power Consumption	:	80.7W
Dimensions	:	Width 538 mm or 21-1/4” Depth 497 mm or 19-1/2” Height 97 mm or 3-3/4” (excluding Document Loading Tray)
Weight	:	6.0 kg or 13-1/4” lbs
Operating Environment	:	Same as copier
Originals Which Should Not be Used	:	

Type of Original	Possible Trouble
Sheets stapled or clipped together	Take-up failure, damaged sheet, defective drive mechanism due to jammed clips.
Sheets glued together	Take-up failure, damaged sheet
Sheets folded, torn, or wrinkled	Take-up failure, damaged sheet
Sheets severely curled	Sheets misfed due to being dog-eared or fed in askew

2 COMPONENTS IDENTIFICATION

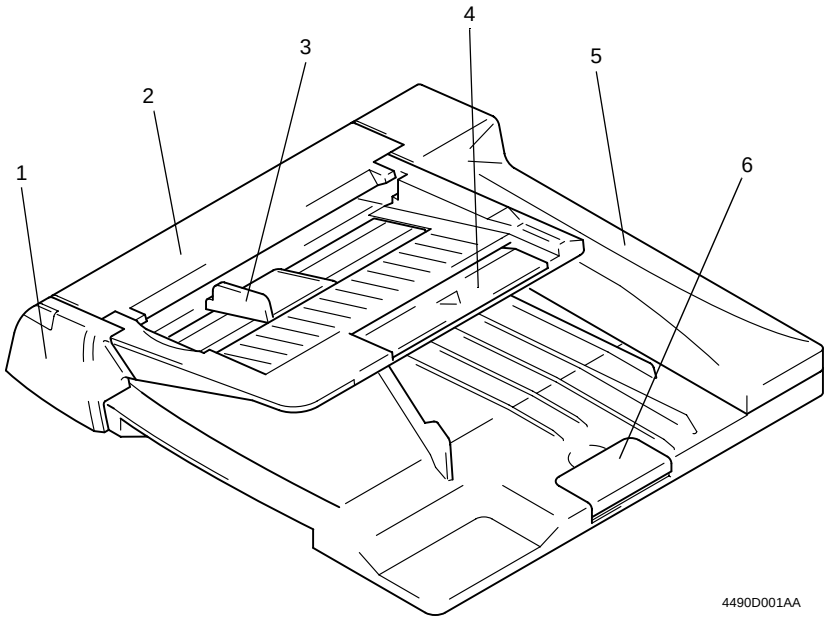

1. Front Cover
2. Take-Up Cover
3. Document Edge Guide
4. Document Loading Tray
5. Rear Cover
6. Stopper

3 CROSS-SECTIONAL VIEW

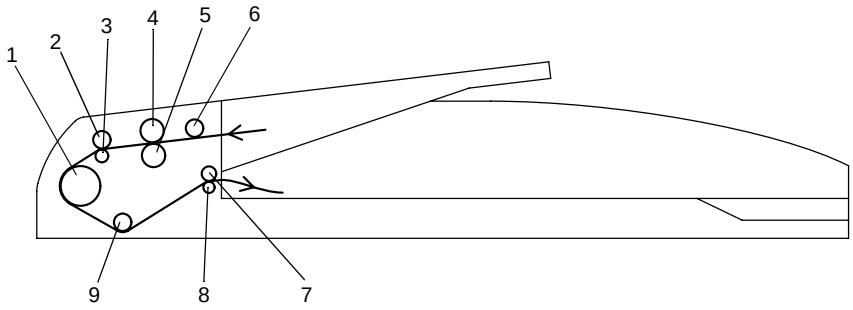

4490D002AA

1. Turnover Roller
2. Feed Roller
3. Feed Roll
4. Take-Up Roller
5. Separator Roller
6. Auxiliary Roller
7. Exit Roller
8. Exit Roll
9. Document Scanning Position Roller

4 DRIVE SYSTEM

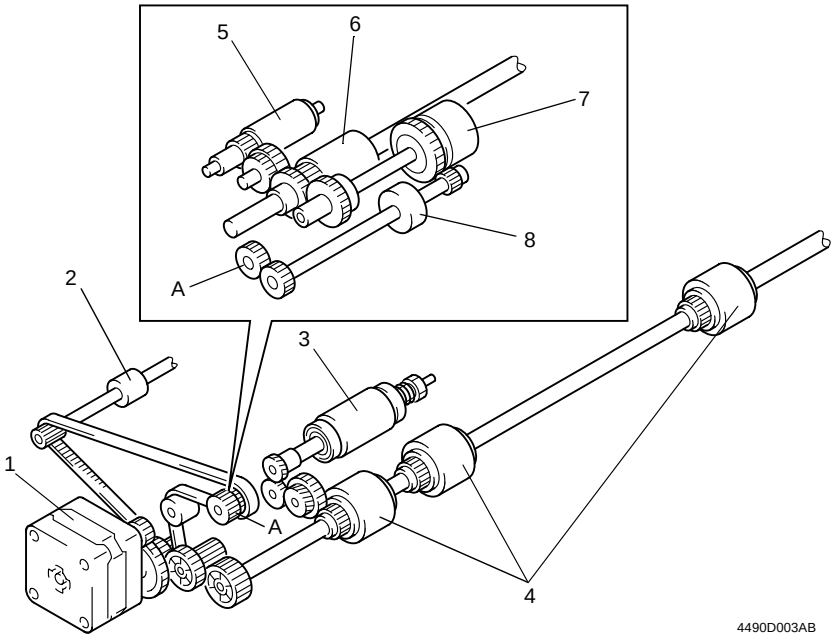

1. Main Motor
2. Exit Roller
3. Separator Roller
4. Turnover Roller
5. Auxiliary Roller
6. Take-Up Roller
7. Take-Up Clutch
8. Feed Roller

5 ELECTRICAL COMPONENT LAYOUT

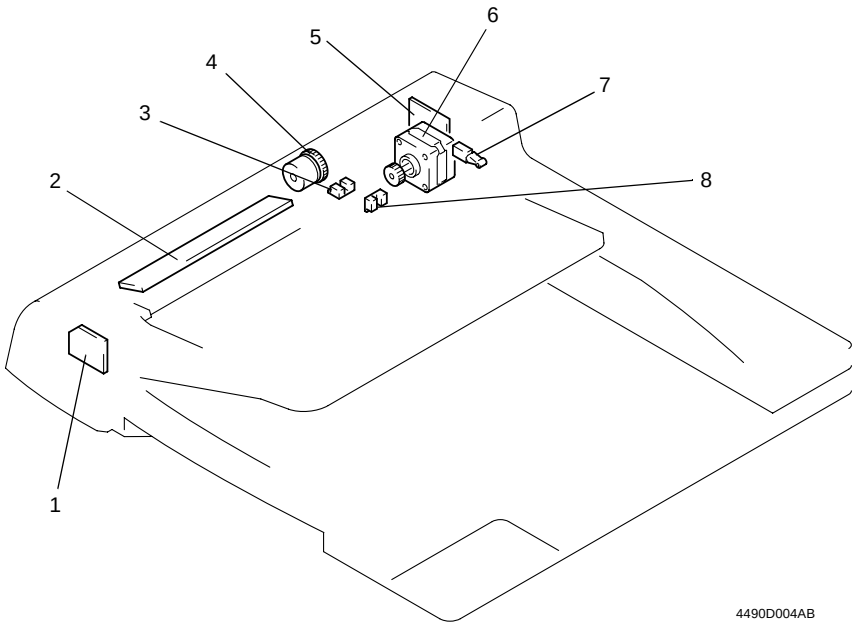

1. Print Lamp Board
2. Original Size Detecting Board
3. Registration Sensor
4. Take-Up Clutch
5. ACR Board
6. Main Motor
7. Cover Switch
8. Document Empty Sensor

6 DESCRIPTION OF MODES

6-1. 1-Sided Original Mode

- When a multi-page document is being used, the copier detects the size of only the first page of the document and runs for the subsequent pages based on that size detection.
- The mode is used when making copies of a document set consisting of pages of the same size.

6-2. Mixed Original Mode

- The copier detects the size of each page of the document as it is taken up and fed in and, according to the size detected, feeds the copy paper of the corresponding size selected from among the available paper sources.
- The width of the pages of the document must be the same.
- This mode is used when making copies from a document set consisting of pages of different sizes from each other. (This setting is made with User's Choice of the copier.)

7 DOCUMENT TAKE-UP/FEEDING MECHANISM

7-1. Document Take-Up Mechanism

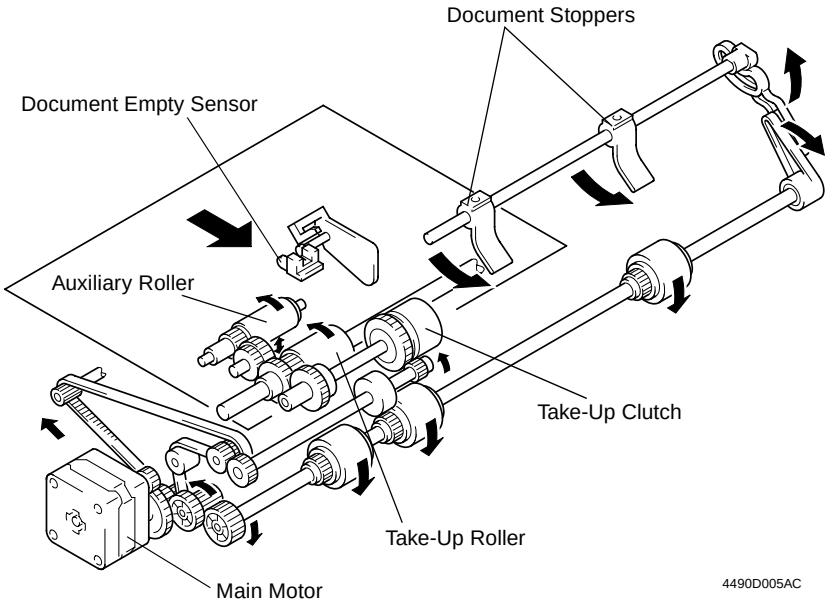

- The document is taken up as the Auxiliary Roller and Take-Up Roller turn.
- The Auxiliary Roller transports the document up to the Take-Up Roller, moving up and down at all times during a document take-up sequence.
- The Auxiliary Roller and Take-Up Roller are turned through the Take-Up Clutch and by gears driven by the Main Motor.
- The Document Empty Sensor is used to detect a document loaded on the Document Loading Tray.
- The leading edge of the document is determined by the Document Stoppers. They swing upward when the document is taken up and are in the lowered, swung-down position in the standby state.
- The Document Stoppers are swung up or down by the Main Motor that turns forward (to swing them up) or backward (to swing them down).

7-2. Document Separating Mechanism

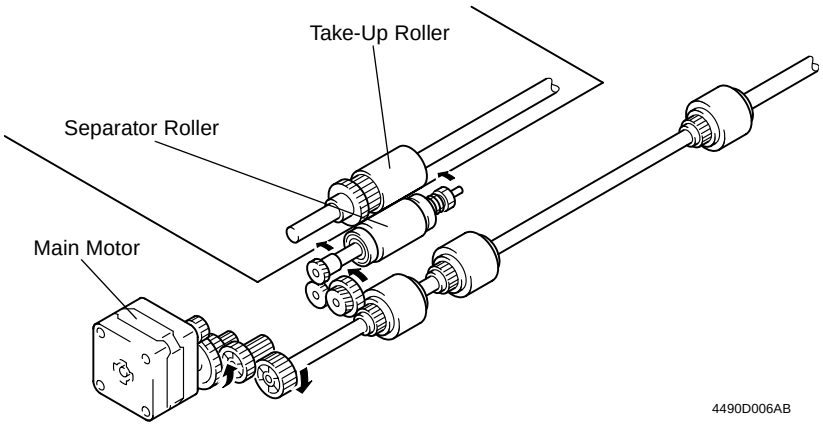

- The Separator Roller is turned in the direction opposite to that of the Take-Up Roller, which effectively separates the top page of the document from the rest.
- The Separator Roller is turned by gears driven by the Main Motor.

8 DOCUMENT TRANSPORT/EXIT MECHANISM

8-1. Document Transport Mechanism

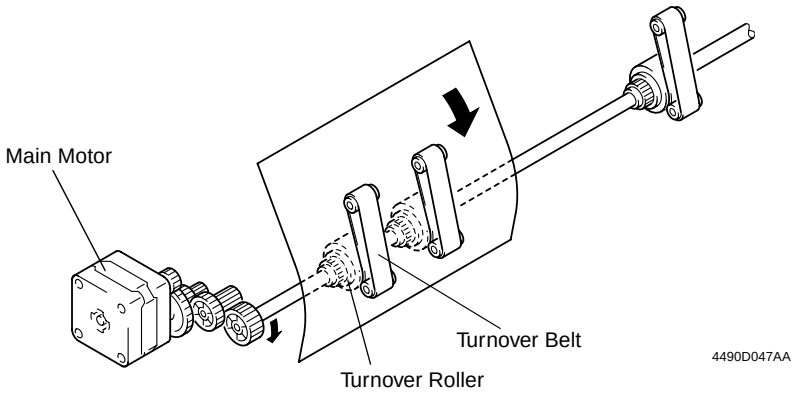

- The document taken up is transported to the document scanning position of the copier by the Turnover Roller and Turnover Belt.
- The Turnover Roller and Turnover Belt are driven by gears which are driven by the Main Motor.

8-2. Document Exit Mechanism

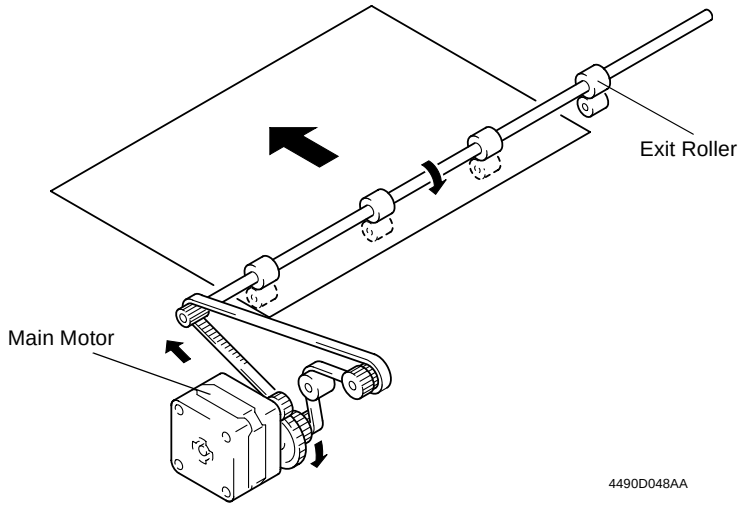

- The document is fed out of the ADF by the Exit Roller.
- The Exit Roller is driven by gears and a belt which are driven by the Main Motor.

8-3. Document Size Detection

- The document size is determined by means of two different systems of document width detection and document length detection.

(Document Width Detection)

- The width of an original is determined by the combination of the blocked (L) and unblocked (H) states of the Original Size Detecting Sensors (1 to 5), as detected while the original is being taken up.

(Document Length Detection)

- The length of an original is determined as the leading or trailing edge of the original blocks (L) or unblocks (H) the Registration Sensor.

8-4. Raised/Lowered Position Detection Mechanism

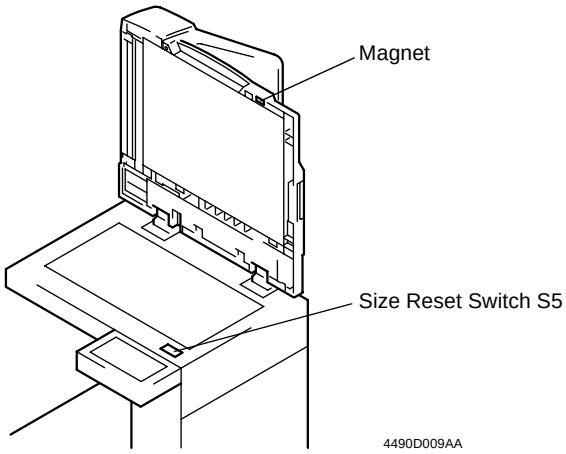

- There is a magnet installed in the ADF body to allow the copier to know that the ADF is raised or lowered.
- This magnet actuates and deactuates the Size Reset Switch on the copier.

TECH. REP. MODE

1 OUTLINE OF THE TECH. REP. MODE

- The Tech. Rep. mode offered by the copier permits sensor checks.
- Sensor checks (I/O Check) are mainly made as part of troubleshooting procedures.
- For the steps to access the “Tech. Rep. Mode” menu, see SWITCHES ON PWBs/TECH. REP. MODE of the copier’s Service Manual.

2 SENSOR CHECK

1. Select the function as follows: Tech. Rep. Mode → I/O Check.

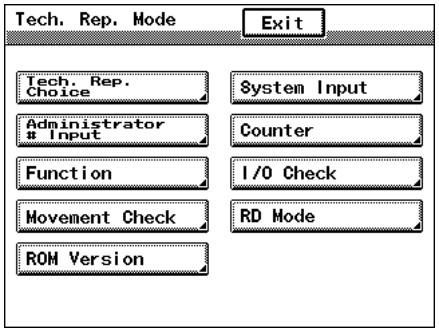

1166U043CA

2. Select “Scan-through ADF.”
3. Using a sheet of paper, activate the sensor to be checked and check for the display on the screen.

Screen Display	Sensor Name	On-screen Data
S1	Cover Switch	Closed: 0
S2	Document Empty Sensor	Paper present: 1
S3	Registration Sensor	Paper present: 1
S4	Original Size Detecting Sensor 1	Paper present: 1
S5	Original Size Detecting Sensor 2	Paper present: 1
S6	Original Size Detecting Sensor 3	Paper present: 1
S7	Original Size Detecting Sensor 4	Paper present: 1
S8	Original Size Detecting Sensor 5	Paper present: 1

DIS/REASSEMBLY, ADJUSTMENT

Precautions for Disassembly, Reassembly, and Adjustment

1. Before attempting to disassemble the ADF, always make sure that no power is being supplied from the copier.
2. While power is being supplied to the ADF, do not attempt to remove/install the print jacks or unplug/plug in the connectors.
3. If the ADF is run with its covers removed, use care not to allow your clothing to be caught in the belt or other revolving part.
4. The basic rule is do not run the ADF with any of its parts removed.
5. A toothed washer is used with the screw that secures the ground wire to ensure positive conduction. Do not forget to use this washer at reassembly.
6. To reassemble the ADF, reverse the order of disassembly unless otherwise specified.
7. Do not attempt to remove or loosen the screws to which red paint has been applied.

Purpose of Application of Red Paint
Red paint is applied to the screws of parts that cannot be readjusted, set, or reinstalled in the field.

1 DISASSEMBLY

1-1. Removal of the Exterior Covers

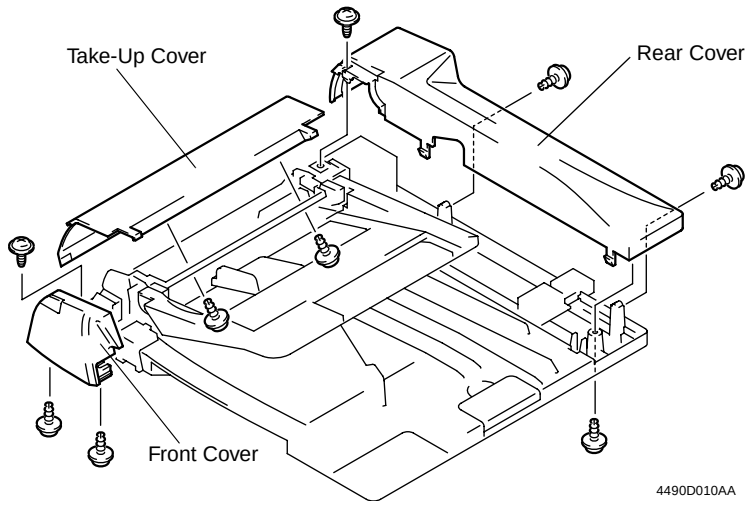

1. Take-Up Cover: Two screws, two tabs
2. Rear Cover: Four screws, two tabs
3. Front Cover: Three screws

1-2. Removal of the Scanner Unit

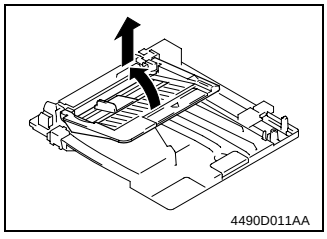

1. Remove the Document Loading Tray.

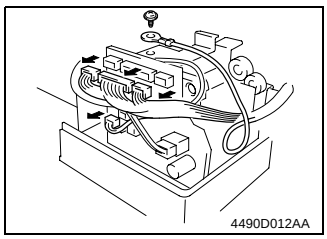

2. Unplug four connectors from the PWB.
3. Remove one screw and ground wire.

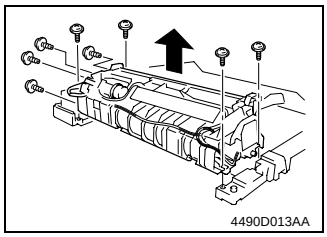

4. Remove eight screws and the Scanner Unit.

1-3. Removal of the Separator Roller Assy

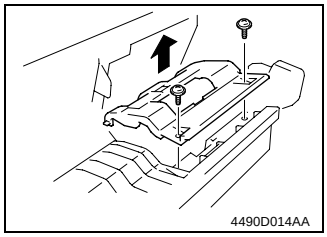

1. Remove the Separator Cover.

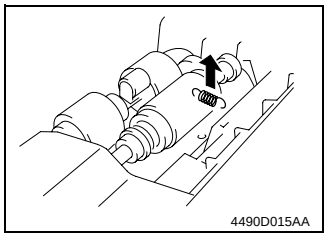

2. Unhook the spring.

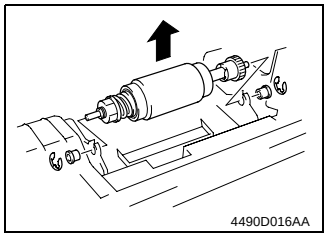

3. Snap off the E-rings and remove the bushings.
4. Remove the Separator Roller Assy.

2 ADJUSTMENT

2-1. Adjustment of the Scanning Start Position in the Main/Sub Scanning Direction

(To be adjusted after scanning zoom ratio adjustment)
(Requirement: The allowance with respect to the reference line should be Main Scanning Direction ±10%, Sub Scanning Direction ±15%.)

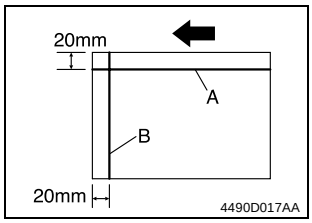

1. Prepare a test chart (A3) as shown.
✻ Draw a straight line at a point 20 mm from the top edge (A): Main scanning direction.
✻ Draw a straight line at a point 20 mm from the left edge (B): Sub scanning direction.

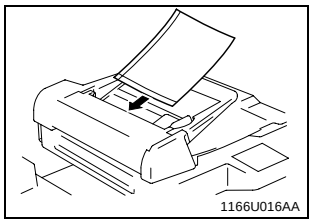

2. Make a full-size copy of the test chart.

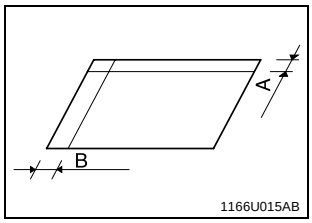

3. Using a scale, measure the dimensions between the corresponding edge and line and determine the deviation.

A: 20 ±2.0 mm B: 20 ±3.0 mm

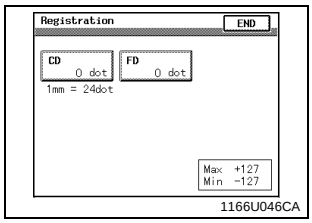

4. Select the function as follows: Tech. Rep. Mode → Tech. Rep. Choice → Scan-through ADF → Registration.

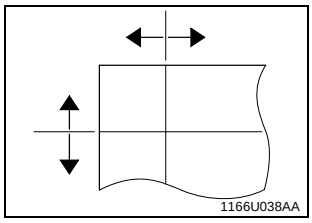

5. Follow these steps to adjust the deviation.
A. Select CD or FD.
B. Blank out the numeric value with the Clear key.
C. Switch the + or - sign as necessary with the ⁄ key. (Select - if the dimension is longer and + if it is shorter.)
D. Enter the numeric value from the 10-Key Pad. (1 mm = 24 dots)
E. Touch [END].
F. Make a copy again and check for deviation.

2-2. Adjustment of the Scanning Zoom Ratio in the Main/Sub Scanning Direction

(Requirement: The allowance with respect to the reference line should be Main Scanning Direction ±1.0%, Sub Scanning Direction ±1.5%.)

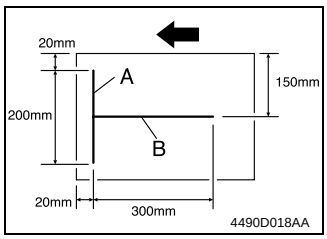

1. Prepare a test chart (A3) as shown.
✻ Draw a 200-mm-long straight line starting with a point 20 mm from the left edge and 20 mm from the top edge (A): Main scanning direction.
✻ Draw a 300-mm-long straight line starting with a point 20 mm from the left edge and 150 mm from the top edge (B): Sub scanning direction.

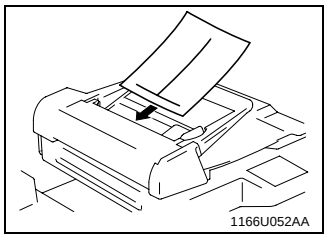

2. Make a full-size copy of the test chart.

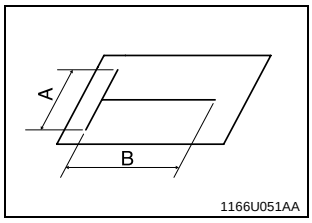

3. Using a scale, measure the dimensions of the lines A and B and determine the deviation.

A: 200 ±2.0 mm B: 300 ±4.5 mm

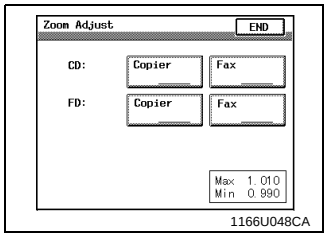

4. Select the function as follows: Tech. Rep. Mode → Tech. Rep. Choice → Scan-through ADF → Zoom Adjust.

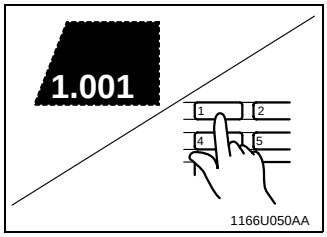

5. Follow these steps to adjust the deviation.
A. Select CD “Copier” or FD “Copier.”
B. Blank out the numeric value with the Clear key.
C. Enter the numeric value (zoom ratio) from the 10-Key Pad. (×1.010 to ×0.990)
D. Touch [END].
E. Make a copy again and check for deviation.

TROUBLESHOOTING

General Precautions

1. When servicing the ADF with its covers removed, use utmost care to prevent your hands, clothing and tools from being caught in revolving parts.
2. Before attempting to replace parts and unplugging connectors, make sure that no power is being supplied from the copier.
3. When creating a closed circuit and measuring a voltage across connector pins specified in the text, be sure to use the green wire (GND).
4. Keep all disassembled parts in good order and keep tools under control so that none will be lost or damaged.

Reading the Text

1. If a component on a PWB or any other functional unit including a motor is defective, the text only instructs you to replace the whole PWB or functional unit and does not give troubleshooting procedure applicable within the defective unit.
2. The text assumes that there are no breaks and shorts in the harnesses and all connectors are plugged into the right positions.

1 MISFEED TROUBLESHOOTING PROCEDURES

- When a misfeed is detected, the Touch Panel of the copier gives a display as shown below (④).

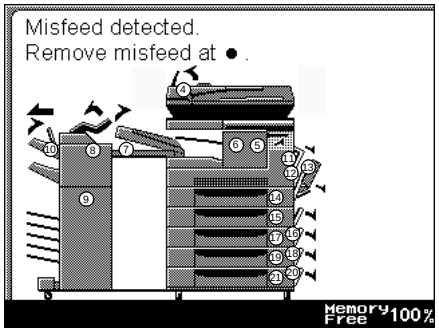

4490T001CA

Symptom	Step No.	Check Item	Result	Action
• The document is not properly detected when it is loaded.	1	Is the Document Empty Sensor operational, as checked through a sensor check?	YES	Change the ACR Board, HGB Board, and MFB Board, in that order.
			NO	Check the actuator for operation and, if it is intact, change the sensor.
• The document is not taken up at all.	1	Does the Auxiliary Roller press the document?	NO	Check the drive transmitting gears.
	2	Is the Main Motor energized?	YES	Check the drive transmitting gears up to the Take-Up Roller.
	3	Does the voltage across CN3-1 on the ACR Board and GND change from LOW to HIGH when the Start key is pressed?	YES	Change the Main Motor.
			NO	Change the ACR Board, HGB Board, and MFB Board, in that order.

Symptom	Step No.	Check Item	Result	Action
• Multiple feed of document pages occurs.	1	Does the document being used fall outside the category of reliable feeding?	YES	Instruct the user to use the document that meets the specifications for reliable feeding.
	2	Has the capacity of the Document Loading Tray been exceeded?	YES	Instruct the user not to exceed the capacity.
	3	Is any of the Auxiliary Roller, Take-Up Roller, and Separator Roller deformed, worn, or dirty with paper dust?	YES	Clean or change the defective roller.
	4	Is the Separator Roller pressed against the Take-Up Roller?	NO	Check the spring.
			YES	Change the Separator Roller Assy.
• The document stops midway.	1	Is a foreign object present along the document path?	YES	Remove the foreign object.
	2	Is the Take-Up Cover closed in position?	NO	Close the cover in position.
	3	Is the Registration Sensor operational, as checked through a sensor check?	YES	Change the ACR Board, HGB Board, and MFB Board, in that order.
			NO	Check the actuator for operation and, if it is intact, change the sensor.
	4	Is any of the Turnover Roller, Turnover Belts, and Exit Roller deformed, worn, or dirty with paper dust?	YES	Clean or change the defective part.
	5	Does the Turnover Roller or Exit Roller turn?	NO	Check the drive transmitting gears and belt.

Symptom	Step No.	Check Item	Result	Action
• The document is fed in askew.	1	Is a foreign object present along the document path?	YES	Remove the foreign object.
	2	Is the Take-Up Cover closed in position?	NO	Close the cover in position.
	3	Does the document consist of pages of different sizes?	YES	Align one edges properly when loading the document.
	4	Is any of the rollers deformed, worn, or dirty with paper dust?	YES	Clean or change the defective roller.
• The document wrinkles or breaks.	1	Does the document being used fall outside the category of reliable feeding?	YES	Instruct the user to use the document that meets the specifications for reliable feeding.
	2	Has the capacity of the Document Loading Tray been exceeded?	YES	Instruct the user not to exceed the capacity.
	3	Is a foreign object present along the document path?	YES	Remove the foreign object.
	4	Is any of the rollers deformed, worn, or dirty with paper dust?	YES	Clean or change the defective roller.