FrameMaker Ver.5.5(PC) AFR-14 OPTION FOR Di350
98.10.09

AFR-14

SERVICE MANUAL

MINOLTA

14413

CONTENTS

GENERAL, MECHANICAL/ELECTRICAL

1. SPECIFICATIONS M-1
2. COMPONENT IDENTIFICATION M-3
3. CROSS-SECTIONAL VIEW M-4
4. DRIVE SYSTEM M-5
5. ELECTRICAL COMPONENT LAYOUT M-6
6. DESCRIPTION OF MODES M-7
   6-1. Mixed Original Mode M-7
   6-2. 1-Sided Mode M-7
   6-3. 2-Sided Mode M-7
   6-4. Single Feed Mode M-7
7. DOCUMENT TAKE-UP/FEEDING MECHANISM M-8
   7-1. Parts Identification M-8
   7-2. Document Pick-Up Mechanism M-9
   7-3. Document Take-Up Mechanism M-11
8. DOCUMENT TRANSPORT MECHANISM M-13
   8-1. Parts Identification M-13
   8-2. Document Transport Mechanism M-14
9. TURNOVER/EXIT MECHANISM M-15
   9-1. Parts Identification M-15
   9-2. Document Transport Mechanism M-15
   9-3. Turnover/Exit Switching Mechanism M-17
10. MISCELLANEOUS M-18
   10-1.Document Size Detection Mechanism M-18
   10-2.15° Open Detection Mechanism M-18
   10-3.Raised/Lowered Position Detection Mechanism M-18

TEST MODES

1. OUTLINE OF THE TEST MODES S-1
   1-1. Test Mode Setting Procedure S-1
   1-2. Types of Test Modes S-1
2. PAPER PASSAGE CHECK S-2
   2-1. Paper Passage Modes S-2
   2-2. Paper Passage Check Procedure S-2
3. UNIT CHECK S-3
   3-1. Unit Check Modes S-3
   3-2. Unit Check Procedure S-3
4. SENSOR CHECK S-6
   4-1. Sensor Check Mode S-6
   4-2. Sensor Check Procedure S-7
5. BOARD CHECK S-8
   5-1. Board Check Mode S-8
   5-2. Board Check Procedure S-8

DIS/REASSEMBLY, ADJUSTMENT

1. DISASSEMBLY D-1
1-1. Removal of the Transport Belt D-1
1-2. Removal of the Pick-Up Rolls, Take-Up Rolls, and Separator Pads D-2
2. ADJUSTMENTS D-4
2-1. Adjustment of Skew in the ADF D-4
2-2. Adjustment of the Document Feed Tray Reference Position D-5
2-3. Adjustment of the Single Feed Tray Reference Position D-6
2-4. Adjustment of the Document Stop Position in the 1-Sided and 1-Sided Mixed Original Mode D-7
2-5. Adjustment of the Document Stop Position in the 2-Sided Mode D-8
2-6. Adjustment of the Document Stop Position in the Single Feed Mode D-9
2-7. Adjustment of Turnover/Exit Switching Solenoid SL1 ..... D-10

TROUBLESHOOTING

1. MISFEED DETECTION T-1
2. MISFEED TROUBLESHOOTING PROCEDURES T-3

GENERAL, MECHANICAL/ELECTRICAL

1 SPECIFICATIONS

Name	:	Duplexing Document Feeder
Type	:	Paper Take-Up : Take-up from top of stack, U-turn feeding Transport : Single-belt transport Turnover : Loop turnover Ejection : Straight ejection
Installation	:	Mounted on the copier
Type of Document	:	Plain paper : 1-Sided mode - 50 g/m² to 110 g/m² 2-Sided mode - 60 g/m² to 90 g/m² Single Feed mode - 35 g/m² to 200 g/m²
Detectable Document Sizes	:	A5L/C, B5C/L, A4C/L, B4L, A3L, 11" × 17"L, 11" × 15", 8-1/2" × 14"L, 8-1/2" × 11"L/C, 8-1/4" × 13"L
Capacity	:	Document Feed Table: 50 sheets (80 g/m²) Document Exit Tray: 50 sheets (80 g/m²)
Alignment	:	Rear Document Edge Guide
Document Loading	:	Face up
Modes	:	Mixed Original 1-Sided 2-Sided Single Feed
Power Source	:	DC24V (supplied from the copier)
Power Consumption	:	60W or less
Dimensions	:	Width 603 mm Height 110 mm Depth 502 mm (excluding Document Exit Tray)
Weight	:	12.0 kg
Operating Environment	:	Same as copier
Originals Which Should Not be Used	:	The following types of originals, if used with the ADF, are very likely to cause trouble.

Type of Original	Possible Trouble
Sheets stapled or clipped together	Take-up failure, damaged sheet, defective drive mechanism due to jammed staples or clips.
Sheets glued together	Take-up failure, damaged sheet
Sheets folded, torn, or wrinkled	Take-up failure, damaged sheet
Sheets severely curled	Sheets mis-fed due to being dog-eared or fed in askew
Sheets weighing less than 40 g/m²	Damaged sheet

Originals for Which Feeding is not Guaranteed : The following types of originals, if used with the ADF, may or may not cause trouble.

Type of Original	Possible Trouble
Pieces of paper pasted up on a sheet	Folded or torn pasted-up pieces
Slightly curled sheets (curl 10 to 15 mm)	Dog-eared pages, ejection failure
Heat-sensitive paper	Folded leading edge, ejection failure, transport failure
Coated sheets	Take-up failure, transport failure
Translucent paper	Take-up failure, transport failure
Sheets just fed out of the copier	Take-up failure, transport failure
Perforated sheets (loose-leaf, etc.)	Multiple feed due to burrs in perforations
Sheets weighing 40 g/m² to 50 g/m²	Folded leading edge
Sheets with surface irregularities (letterhead, etc.)	Take-up failure
Pencil-written sheets	Dirty originals
Folded sheets	Distorted image, multiple feed, take-up failure
Sheets of a size outside the range detectable by the ADF	Void image

2 COMPONENT IDENTIFICATION

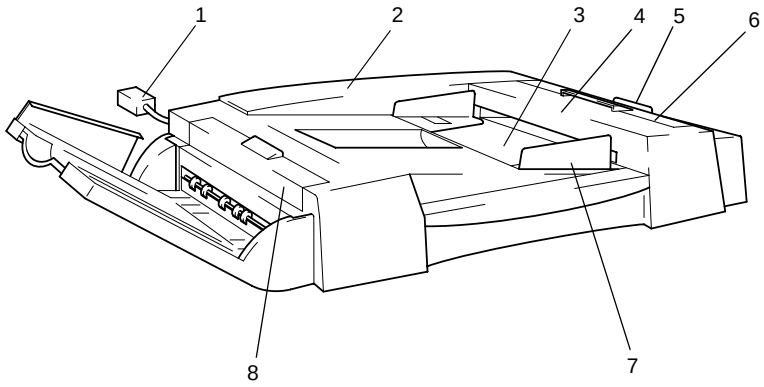

4490M001AA

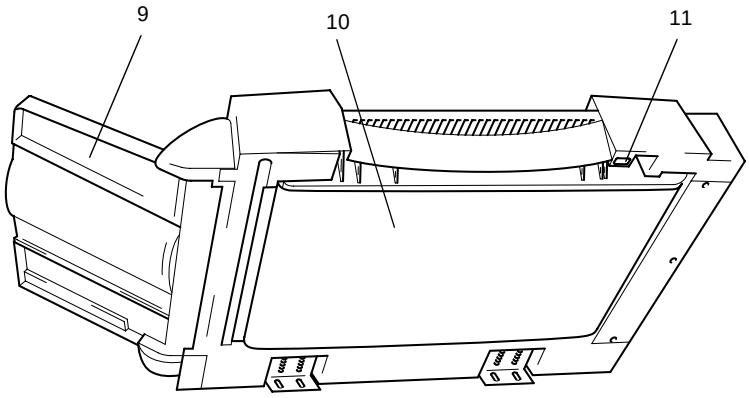

4490M002AA

1. Hookup Cord
2. Rear Cover
3. Document Feed Tray
4. Upper Cover
5. Single Feed Tray
6. Take-Up Cover
7. Document Edge Guide
8. Turnover/Exit Cover
9. Document Exit Tray
10. Transport Belt
11. Magnet

3 CROSS-SECTIONAL VIEW

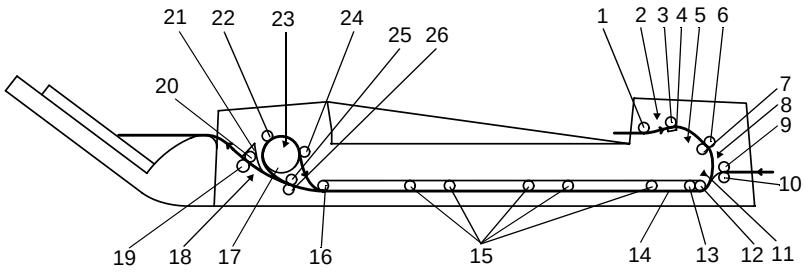

4490M003AC

1. Pick-Up Roll
2. Empty Sensor PC1
3. Take-Up Roll
4. Separator Pad
5. Registration Sensor PC2
6. Registration Driven Roller
7. Registration Drive Roller
8. Single Feed Empty Sensor PC9
9. Single Feed Roller
10. Single Feed Roll
11. Width Sensor 1/2/3 PC5/6/7
12. Transport Belt Drive Roller
13. Transport Belt Driven Roller
14. Transport Belt
15. Transport Rolls
16. Transport Belt Driven Roller
17. Turnover Roller
18. Exit Sensor PC3
19. Exit Roller
20. Exit Roll
21. Turnover/Exit Switching Plate
22. Turnover Roll
23. Turnover Sensor PC4
24. Turnover Roll
25. Transport Roller
26. Transport Roll

4 DRIVE SYSTEM

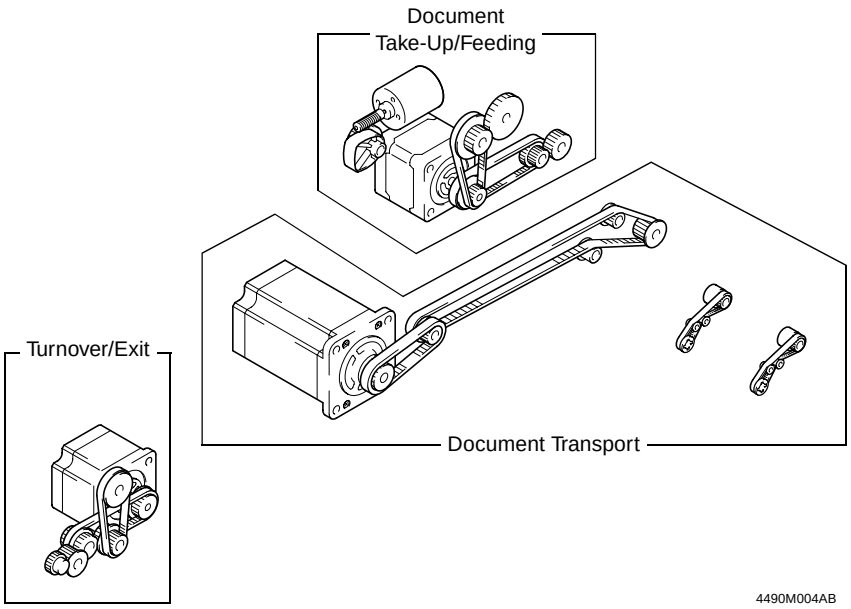

5 ELECTRICAL COMPONENT LAYOUT

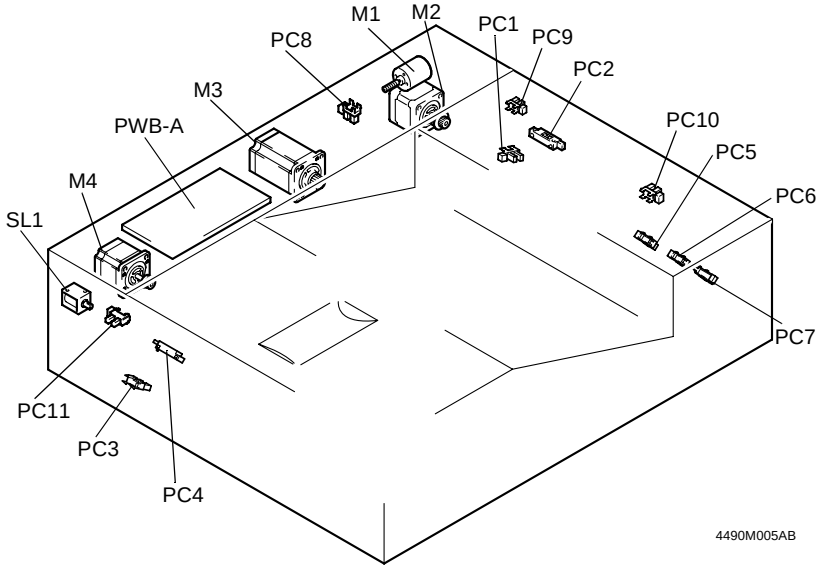

Code	Name	Code	Name
PWB-A	Main Control Board	PC5	Width Sensor 1
M1	Pick-Up Motor	PC6	Width Sensor 2
M2	Take-Up Motor	PC7	Width Sensor 3
M3	Main Drive Motor	PC8	Pick-Up Sensor
M4	Turnover/Exit Motor	PC9	Single Feed Empty Sensor
SL1	Turnover/Exit Switching Solenoid	PC10	Take-Up Cover Open/Close Detecting Sensor
PC1	Empty Sensor		
PC2	Registration Sensor	PC11	Turnover/Exit Cover Open/Close Detecting Sensor
PC3	Exit Sensor		
PC4	Turnover Sensor		

6 DESCRIPTION OF MODES

6-1. Mixed Original Mode

- The copier detects the size of each page of the document as it is taken up and fed in and, according to the size detected, feeds the copy paper of the corresponding size selected from among the available paper sources.
- The mode is mainly used when making copies from a document set consisting of pages of different sizes.

6-2. 1-Sided Mode

- When a multi-page document is being copied, the copier detects the size of only the first page of the document and copies the subsequent pages based on that size detection.
- This saves the copier the time required for detecting the sizes of the subsequent pages of the document, making for a faster and more efficient paper feed timing.

Note:
If a document of pages of varying sizes is used in this mode, image trouble could result including missing copy image. (The system does not, however, force a misfeed condition.)

6-3. 2-Sided Mode

- The copier automatically turns over 2-sided originals for a speedy copying operation (copies are made in the order of the first and second pages).

6-4. Single Feed Mode

- This mode may be used when the user wants to make copies from an original for which feeding is not guaranteed (pasted-up sheet, translucent paper, heat-sensitive paper, etc.).
- When a single original is inserted into the Single Feed Tray, the ADF automatically takes it up and feeds it in to let the copier run a single copy cycle.
- Each original is transported at a low speed.

7 DOCUMENT TAKE-UP/FEEDING MECHANISM

7-1. Parts Identification

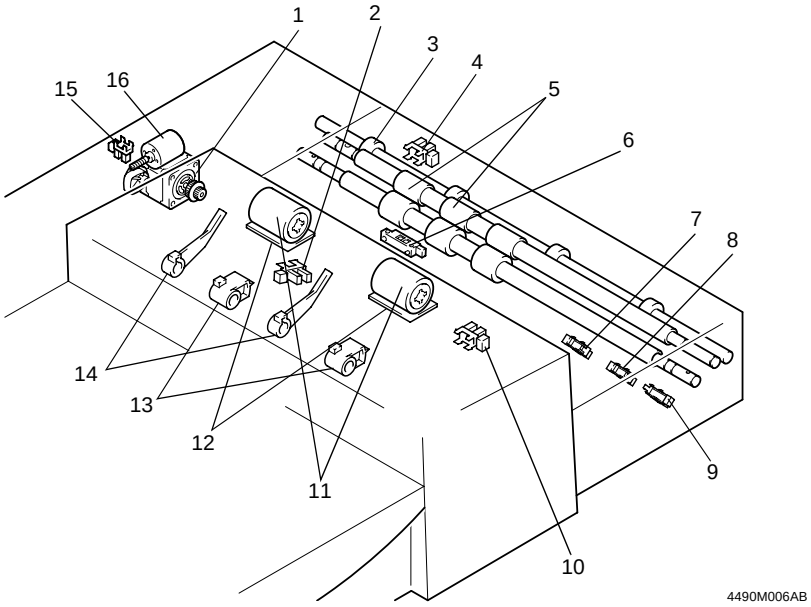

1. Take-Up Motor M2
2. Empty Sensor PC1
3. Single Feed Roller
4. Single Feed Empty Sensor PC9
5. Registration Roller
6. Registration Sensor PC2
7. Width Sensor 1 PC5
8. Width Sensor 2 PC6
9. Width Sensor 3 PC7
10. Take-Up Cover Open/Close Detecting Sensor PC10
11. Take-Up Rolls
12. Separator Pads
13. Pick-Up Rolls
14. Document Stoppers
15. Pick-Up Sensor PC8
16. Pick-Up Motor M1

7-2. Document Pick-Up Mechanism

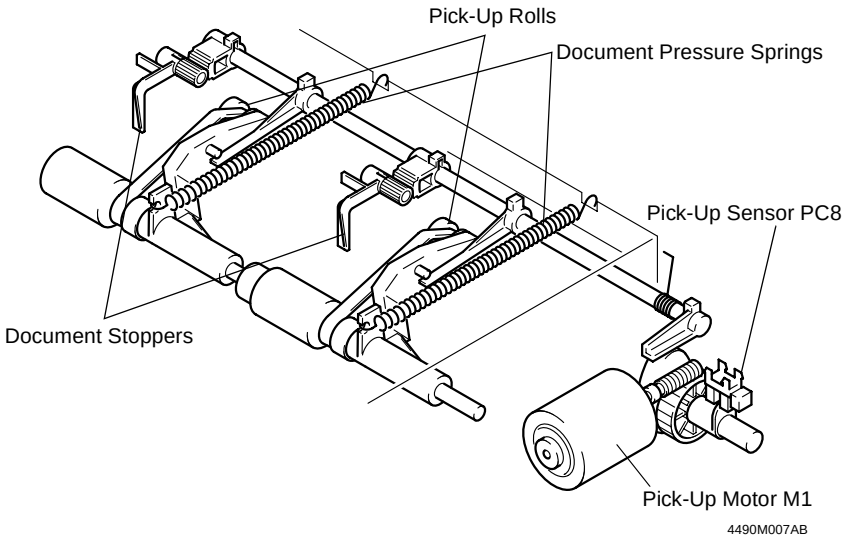

- The document pick-up mechanism consists of the Document Stoppers and Pick-Up Rolls.
- The Document Stoppers determine the leading edge position of the document loaded in the ADF. They are in the lowered position when in their standby position and raised when a document take-up sequence is started.
- The Pick-Up Rolls are in the raised position in their standby state and lowered when a document take-up sequence is started, pressing the document set downward during the sequence with the tension of the Document Pressure Springs.
- The operation of the Document Stoppers and Pick-Up Rolls is controlled by Pick-Up Motor, Pick-Up Sensor, and a cam.

Control of Operation of the Document Stoppers and Pick-Up Rolls

	PC8 and Cam Operation	Document Stoppers/Pick-Up Rolls Operation
Home position ↓ Pick-Up Rolls press document; Document Stoppers retract. ↓ Home position	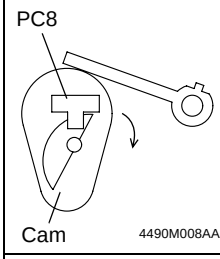 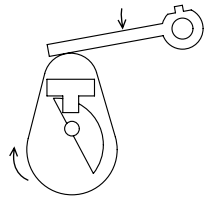 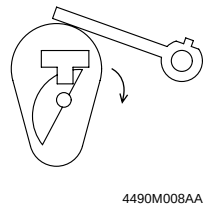	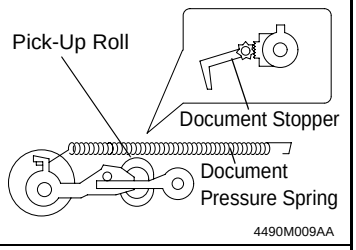 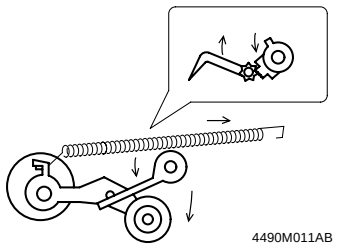 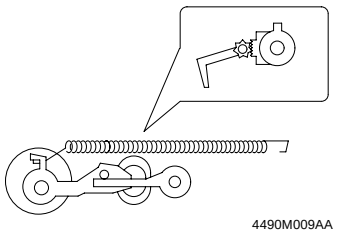

Pick-Up Motor Control
Pick-Up Motor is energized and deenergized by the output signals from IC1A-47 and -48 on PWB-A as follows.

M1	IC1A-47	IC1A-48
Energized	L	H
Deenergized	H	H

7-3. Document Take-Up Mechanism

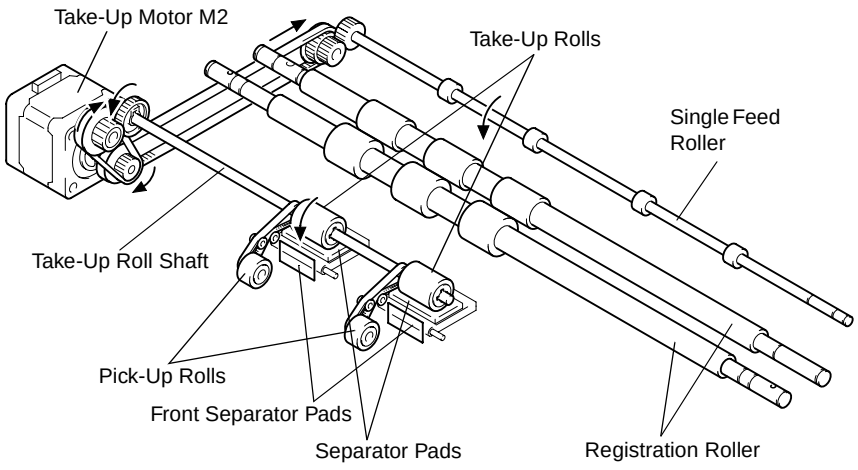

- The Pick-Up Rolls and Take-Up Rolls turn to transport the document loaded in the Document Feed Tray up to the Registration Roller.
- The Single Feed Roller, on the other hand, turns to transport the document placed in the Single Feed Tray.
- The Pick-Up Rolls, Take-Up Rolls, and Single Feed Roller are driven by Take-Up Motor. To drive the Single Feed Roller, Take-Up Motor is turned backward, at which time the Take-Up Roll Shaft also turns backward. Because of the functioning of the one-way pulley, however, the backward rotation of the shaft is not transmitted to the Pick-Up Rolls or Take-Up Rolls.
- The Front Separator Pads and Separator Pads together function to prevent double feed when two or more pages of a document set are taken up.

Take-Up Motor Control

- The pulse signals output from IC12A-1, 5, 10, and 15 on PWB-A are supplied to the two coils inside Take-Up Motor and the combination and sequence of the pulse signals energized are varied to turn Take-Up Motor forward or backward.
- The distance over which an original is transported is detected by counting the number of pulses generated.

IC12A	Sequence				
	1	2	3	4	
Pin 10	L	H	H	L	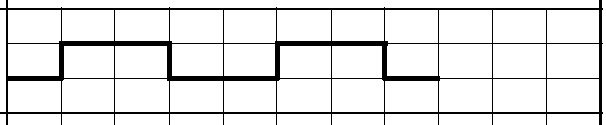
Pin 5	L	L	H	H	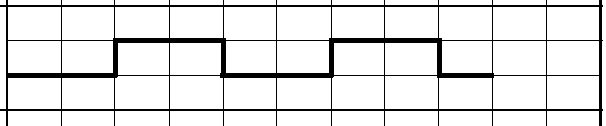
Pin 15	H	L	L	H	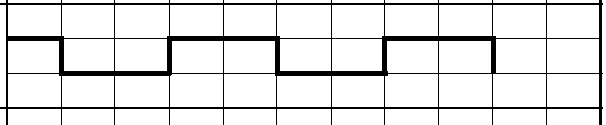
Pin 1	H	H	L	L	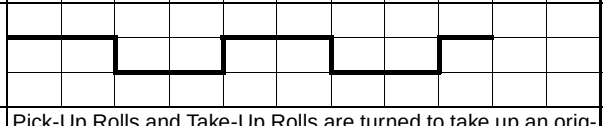
Forward Rotation					Pick-Up Rolls and Take-Up Rolls are turned to take up an original.
Backward Rotation					The Single Feed Roller is turned to take up an original.

8 DOCUMENT TRANSPORT MECHANISM

8-1. Parts Identification

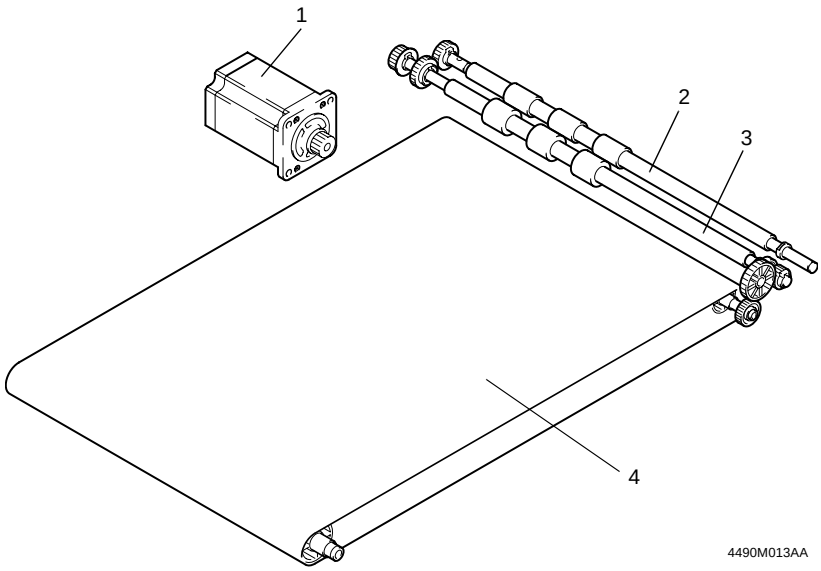

1. Main Drive Motor M3
2. Registration Driven Roller
3. Registration Drive Roller
4. Transport Belt

8-2. Document Transport Mechanism

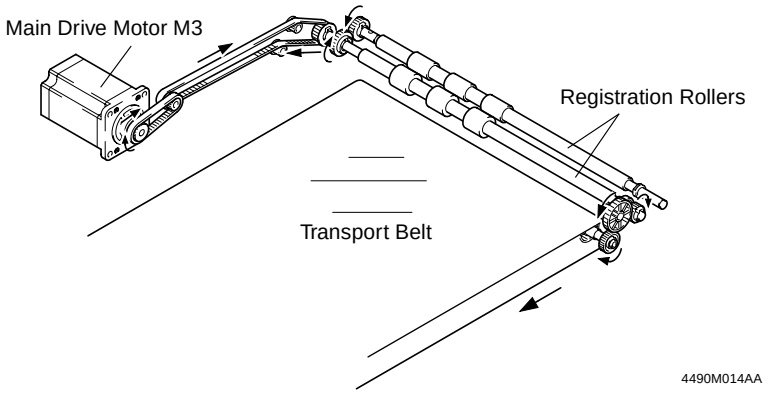

- Rotation of the Registration Rollers and Transport Belt results in the original fed from the Document Feed Tray or Single Feed Tray being transported up to the Original Width Scale.
- The Registration Rollers and Transport Belt are driven by Main Drive Motor.

Main Drive Motor Control

- The pulse signals output from IC10A-1, 8, 11, and 18 on PWB-A are supplied to the two coils inside Main Drive Motor and the combination and sequence of the pulse signals energized are varied to turn Main Drive Motor forward or backward.
- The distance over which an original is transported is detected by counting the number of pulses generated.
- The motor speed is controlled by varying the cycle (A) of the pulse signal.

IC10A	Sequence				
	1	2	3	4	
Pin 8	L	H	H	L	
Pin 18	L	L	H	H	A
Pin 1	H	L	L	H	
Pin 11	H	H	L	L	
Forward Rotation	→				Transports the original toward the Original Width Scale.
Backward Rotation	←				Transports the original, which has been turned over, towards the take-up section.

9 TURNOVER/EXIT MECHANISM

9-1. Parts Identification

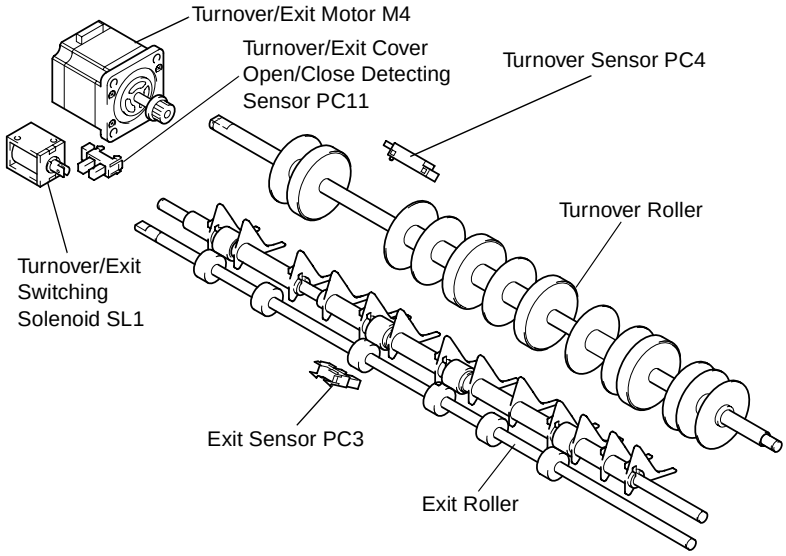

9-2. Document Transport Mechanism

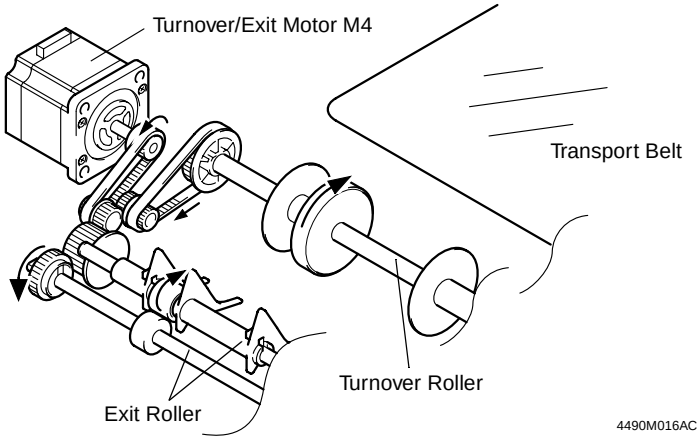

- The Turnover Roller and Exit Roller turn over or feed out of the ADF the original transported from the transport mechanism.
- The Turnover Roller and Exit Roller are driven by Turnover/Exit Motor.

Turnover/Exit Motor Control

- The pulse signals output from IC11A-1, 8, 11, and 18 on PWB-A are supplied to the two coils inside Turnover/Exit Motor to energize Turnover/Exit Motor.
- The distance over which an original is transported is detected by counting the number of pulses generated.
- The motor speed is controlled by varying the cycle (A) of the pulse signal.

IC11A	Sequence				
	1	2	3	4	
Pin 8	L	H	H	L	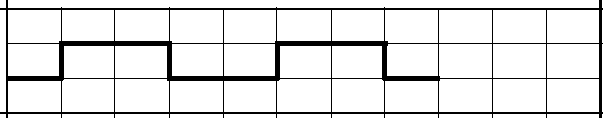
Pin 18	L	L	H	H	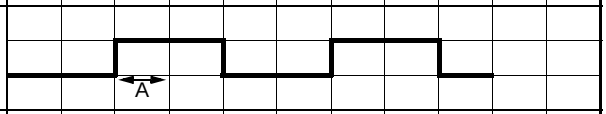
Pin 1	H	L	L	H	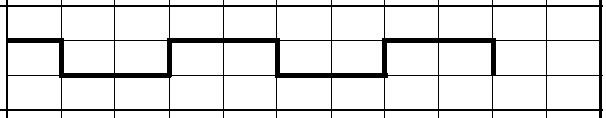
Pin 11	H	H	L	L	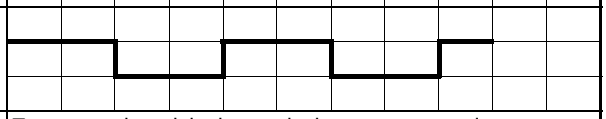
Energized	→				Transports the original towards the turnover or exit mechanism.

9-3. Turnover/Exit Switching Mechanism

- The turnover/exit switching mechanism uses the Turnover/Exit Switching Plate which is swung downward or upward to change the document path, thereby allowing the original to be turned over or ejected from the ADF.
- The switching plate is actuated as Turnover/Exit Switching Solenoid is energized and deenergized.

<For Exit>

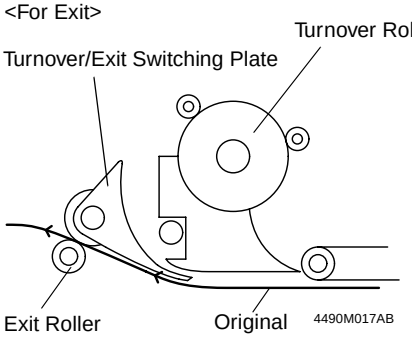

<For Turnover>

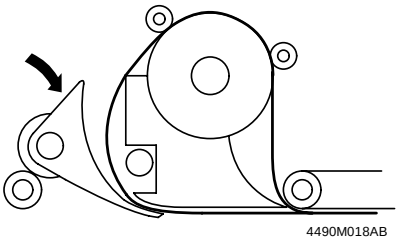

Turnover/Exit Switching Solenoid Control

- Turnover/Exit Switching Solenoid is energized and deenergized by the output from IC1A-49 on PWB-A.

SL1	IC1A-49	Document Path
ON	L	Turnover
OFF	H	Exit

10 MISCELLANEOUS

10-1. Document Size Detection Mechanism

- The document size is determined by means of two different systems of document width detection and document length detection.

Document Width Detection
- The width of an original is detected by the combination of the blocked (L) and unblocked (H) states of Width Sensors 1 PC5, 2 PC6, and 3 PC7, as detected while the original is being taken up.
- Each sensor is located as follows with reference to the Document Edge Guide in the rear. PC5: 236.5 mm; PC6: 268 mm; PC7: 288 mm

Document Length Detection
- The length of an original is detected by counting the number of pulses generated by Main Drive Motor for the period of time from when the Registration Roller starts turning to when the trailing edge of the original moves past Registration Sensor.
- In the Single Feed mode, the period of time for counting the number of pulses is up to when the trailing edge of the original moves past Single Feed Empty Sensor.

10-2. 15° Open Detection Mechanism

- To enable the copier to detect the document size when the ADF is used as the Original Cover of the copier, there is the Lever Actuator provided in the ADF body.
- The Lever Actuator moves the Original Cover Detecting Lever mounted on the copier.

10-3. Raised/Lowered Position Detection Mechanism

- There is a magnet installed in the ADF body to allow the copier to know that the ADF is raised or lowered.
- This magnet actuates the Size Reset Switch on the copier.

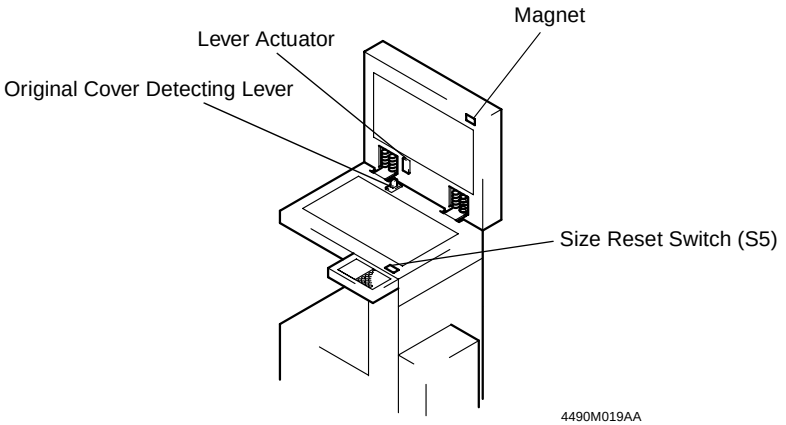

TEST MODES

1 OUTLINE OF THE TEST MODES

- The test modes for the ADF may be initiated from the “Tech. Rep. Mode” menu screen provided for the copier or by changing the position of a DIP switch key on PWB-A of the ADF.
- For the “Tech. Rep. Mode” menu screen, see “SWITCHES ON PWBs: Tech. Rep. Mode” of the copier’s Service Manual.

1-1. Test Mode Setting Procedure

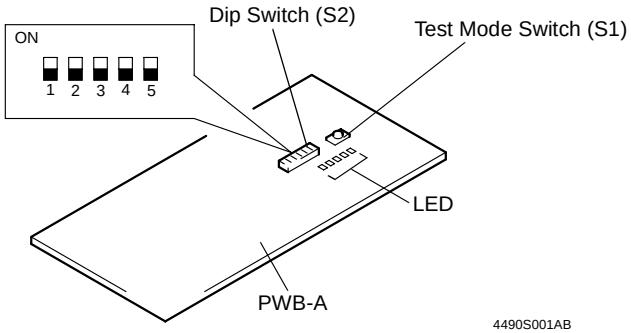

- Flip S2-5 to the ON position and turn OFF and ON the Power Switch of the copier. This sets the ADF into the Test mode.
- Various types of Test Mode operations are available, each being selected with a particular combination of ON and OFF settings of S2-1 to -5. To run a particular operation, make the correct DIP switch key settings, raise and lower the ADF to validate the settings, and press S1 to start the operation.

1-2. Types of Test Modes

- The following four types of Test Modes are available:
  Paper Passage Check
  Unit Check
  Sensor Check
  Board Check

2 PAPER PASSAGE CHECK

2-1. Paper Passage Modes

Paper Passage Mode		S2				
		1	2	3	4	5
1-Sided	Continuous					ON
	Intermittent				ON	ON
Mixed Original	Continuous	ON				ON
	Intermittent	ON			ON	ON
2-Sided	Continuous		ON			ON
	Intermittent		ON		ON	ON
Single Feed	Intermittent	ON	ON			ON

(Blank means OFF.)

✻ To adjust the stop position, flip S2-3 to ON. The adjustment procedure will be found in DIS/REASSEMBLY, ADJUSTMENT to follow.

2-2. Paper Passage Check Procedure

1. Turn OFF the Power Switch of the copier and flip S2-5 to ON.
2. Turn ON the Power Switch of the copier. (This sets the ADF into the Test Mode.)
3. Make the necessary settings of S2-1 to -4 for the desired paper passage mode.
4. Raise and lower the ADF.
5. Load a document set in the Document Feed Tray.
6. Press S1 once.
7. This starts the paper passage check.

✻ To interrupt a continuous paper passage mode (S2-4: OFF), press S1 once. If S1 is then pressed a second time, the ADF feeds all originals out of itself to terminate the paper passage mode.

✻ In an intermittent paper passage mode (S2-4: ON), each press of S1 lets the ADF feed an original through itself.

✻ To select either the continuous or intermittent mode, turn OFF the Power Switch of the copier, flip S2-4 to OFF and then ON, and turn ON the Power Switch.

3 UNIT CHECK

3-1. Unit Check Modes

Unit Check Mode	S2				
	1	2	3	4	5
Pick-Up Motor M1	ON	ON			
Take-Up Motor M2			ON		
Main Drive Motor M3	ON		ON		
Turnover/Exit Motor M4		ON	ON		
Turnover/Exit Switching Solenoid SL1	ON	ON	ON		

(Blank means OFF.)

✻ Flipping S2-4 to ON before the Power Switch is turned ON allows for setting the ADF into the Durability mode which, once started, continues running until stopped.

3-2. Unit Check Procedure

1. Turn OFF the Power Switch of the copier and flip S2-5 to ON. (Flip S2-4 to ON for the Durability mode.)
2. Turn ON the Power Switch of the copier. (This sets the ADF into the Test Mode.)
3. Make the necessary settings of S2-1 to -5 for the desired unit check mode.
4. Raise and lower the ADF.
5. This completes the setting of the unit check mode.

Pick-Up Motor check:

- Each press of S1 repeats the operation shown below.

No. of Times S1 is Pressed	LED					Operation
	1	2	3	4	5	
0	◎	❍	❍	❍	❍	Standby
1	◎	❍	❍	❍	●	Rotation (Take-Up Rolls down)

(◎: Blinking, ❍: OFF, ●: ON)

Take-Up Motor check:
- Each press of S1 repeats the operation shown below.
- The motor automatically stops turning in about 60 sec.

No. of Times S1 is Pressed	LED					Operation
	1	2	3	4	5	
0	◎	❍	❍	❍	❍	Standby
1	◎	❍	❍	❍	●	Forward rotation (150 mm/sec.)
2	◎	❍	❍	●	❍	Stop
3	◎	❍	❍	●	●	Backward rotation (300 mm/ sec.)

(◎: Blinking, ❍: OFF, ●: ON)

Main Drive Motor check:
- Each press of S1 repeats the operation shown below.
- The motor automatically stops turning in about 60 sec.

No. of Times S1 is Pressed	LED					Operation
	1	2	3	4	5	
0	◎	❍	❍	❍	❍	Standby
1	◎	❍	❍	❍	●	Forward rotation (650 mm/sec.)
2	◎	❍	❍	●	❍	Stop
3	◎	❍	❍	●	●	Backward rotation (650 mm/ sec.)
4	◎	❍	●	❍	❍	Stop
5	◎	❍	●	❍	●	Forward rotation (300 mm/sec.)

(◎: Blinking, ❍: OFF, ●: ON)

Turnover/Exit Motor check:
- Each press of S1 repeats the operation shown below.
- The motor automatically stops turning in about 60 sec.

No. of Times S1 is Pressed	LED					Operation
	1	2	3	4	5	
0	◎	❍	❍	❍	❍	Standby
1	◎	❍	❍	❍	●	Rotation (650 mm/sec.)
2	◎	❍	❍	●	❍	Stop
3	◎	❍	❍	●	●	Rotation (300 mm/sec.)

(◎: Blinking, ❍: OFF, ●: ON)

Turnover/Exit Switching Solenoid SL1 check:

- Each press of S1 repeats the operation shown below.

No. of Times S1 is Pressed	LED					Operation
	1	2	3	4	5	
0	◎	❍	❍	❍	❍	Standby
1	◎	❍	❍	❍	●	Energized

(◎: Blinking, ❍: OFF, ●: ON)

4 SENSOR CHECK

4-1. Sensor Check Mode

- "Tech. Rep. Mode" menu screen on the copier Touch Panel:

1. Select "I/O Check" on the "Tech. Rep. Mode" menu screen.

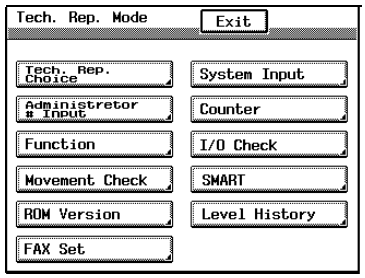

4490S007CA

2. Select "ADFR."
3. Using a sheet of paper or other device, activate the sensor to be checked and check the data shown on the screen (paper present: 1; paper not present: 0).

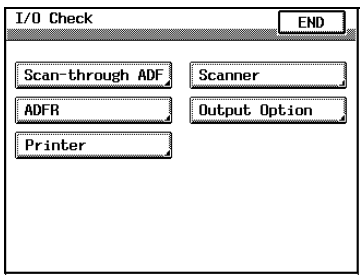

4490S008CA

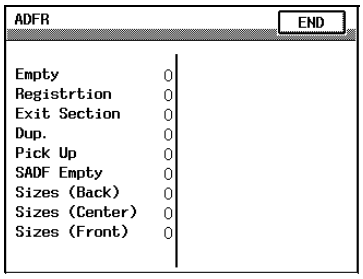

4490S009CA

- DIP Switch S2 on PWB-A of this ADF:

Mode	S2				
	1	2	3	4	5
Sensor Check 1					
Sensor Check 2	ON				

(Blank means OFF.)

Sensor Check 1:
- Empty Sensor PC1
- Registration Sensor PC2
- Exit Sensor PC3
- Turnover Sensor PC4

Sensor Check 2
- Single Feed Empty Sensor PC9
- Width Sensor 1 PC5
- Width Sensor 2 PC6
- Width Sensor 3 PC7

4-2. Sensor Check Procedure

1. Turn OFF the Power Switch of the copier and flip S2-5 to ON.
2. Turn ON the Power Switch of the copier. (This sets the ADF into the Test Mode.)
3. Make the necessary settings of S2-1 to -5 for the desired sensor check mode.
4. Raise and lower the ADF.
5. This completes the setting of the sensor check mode.

Sensor Check 1 check:

- Using a sheet of paper or other device, activate the sensor to be checked and check for the LED condition.

Sensor	LED					Operation
	1	2	3	4	5	
Empty Sensor PC1	◎	❍	❍	❍	●	Blocked
Registration Sensor PC2	◎	❍	❍	●	❍	Blocked
Exit Sensor PC3	◎	❍	●	❍	❍	Unblocked
Turnover Sensor PC4	◎	●	❍	❍	❍	Blocked

(◎: Blinking, ❍: OFF, ●: ON)

Sensor Check 2 check:

- Using a sheet of paper or other device, activate the sensor to be checked and check for the LED condition.

Sensor	LED					Operation
	1	2	3	4	5	
Single Feed Empty Sensor PC9	◎	❍	❍	❍	●	Blocked
Width Sensor 1 PC5	◎	❍	❍	●	❍	Unblocked
Width Sensor 2 PC6	◎	❍	●	❍	❍	Unblocked
Width Sensor 3 PC7	◎	●	❍	❍	❍	Unblocked

(◎: Blinking, ❍: OFF, ●: ON)

5 BOARD CHECK

5-1. Board Check Mode

- Each electrical component is energized sequentially to determine if the drive circuit of PWB-A is fully operational.

1. Turn OFF the Power Switch of the copier and flip S2-4 to ON.
2. Turn ON the Power Switch of the copier.
3. This completes the setting of the board check mode.

5-2. Board Check Procedure

- Each press of S1 energizes the following electrical components in that order, one at a time.

1. Turnover/Exit Switching Solenoid is energized and, in one sec., deenergized.
2. Pick-Up Motor turns.
3. Take-Up Motor turns. (150 mm/sec.)
4. Main Drive Motor turns. (650 mm/sec.)
5. Turnover/Exit Motor turns. (650 mm/sec.)
6. All energized components are deenergized.

DIS/REASSEMBLY, ADJUSTMENT

Precautions for Disassembly, Reassembly, and Adjustment

1. Before attempting to disassemble the ADF, always make sure that no power is being supplied from the copier.
2. While power is being supplied to the ADF, do not attempt to remove/install the print jacks from/to the PWBs or unplug/plug in the connectors.
3. If the ADF is run with its covers removed, use care not to allow your clothing to be caught in the belt or other moving parts.
4. The basic rule is do not run the ADF with any of its parts removed.
5. A toothed washer is used with the screw that secures the ground wire to ensure positive conduction. Do not forget to use this washer at reassembly.
6. To reassemble the ADF, reverse the order of disassembly unless otherwise specified.
7. Do not attempt to remove or loosen the screws to which red paint has been applied.

Purpose of Application of Red Paint
Red paint is applied to the screws of parts that cannot be readjusted, set, or reinstalled in the field.

1 DISASSEMBLY

1-1. Removal of the Transport Belt

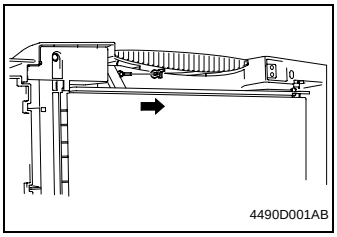

1. Snap off the C-clip.

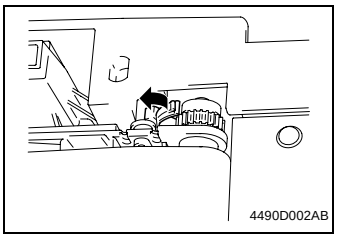

2. Unlock the holder that holds the Transport Belt Drive Roller.

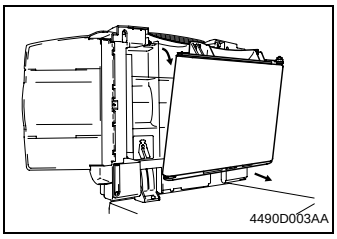

3. Pull the Transport Belt Roller Assy toward you and remove it from the ADF.

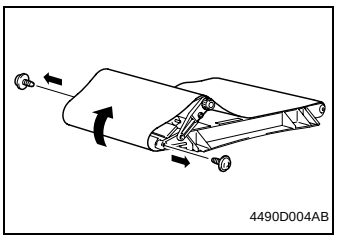

4. Remove two screws and bend the roller unit inward.

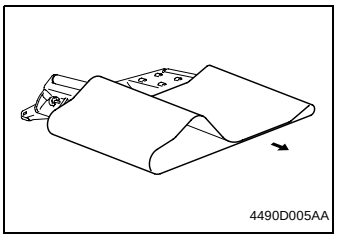

5. Remove the Transport Belt.

1-2. Removal of the Pick-Up Rolls, Take-Up Rolls, and Separator Pads

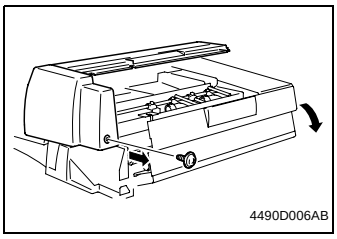

1. Open the Take-Up Cover and remove one screw and the Upper Cover.

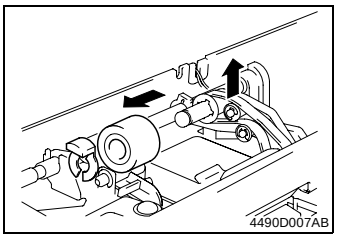

2. Lift the Pick-Up Roll Arm.
3. Snap off the C-clip from the Pick-Up Roll Shaft and remove the Pick-Up Roll.

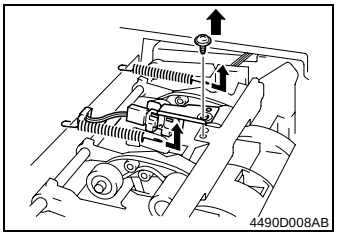

4. Unhook the two springs from the Pick-Up Roll Arm.
5. Remove one screw and the Paper Empty Sensor.

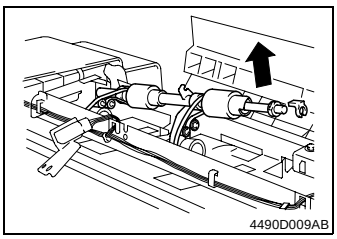

6. Snap off the C-clip.
7. Slide off the bushing and raise the shaft.

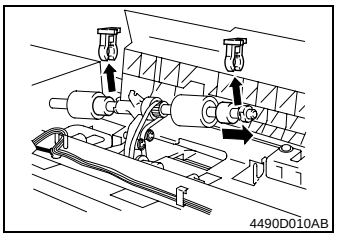

8. Snap off the C-clips and remove the Take-Up Rolls from their shaft.

Note
When reinstalling the Take-Up Rolls, make sure that the blue end of the one-way bearing is on the side opposite the Take-Up Roll.

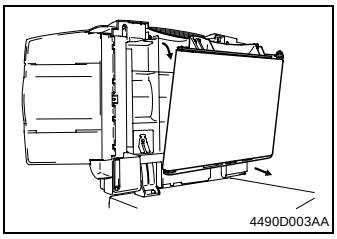

9. Remove the Transport Belt Roller Assy.

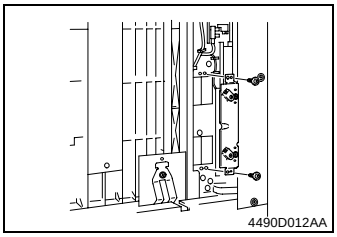

10. Remove two screws and the Separator Pad Assy.

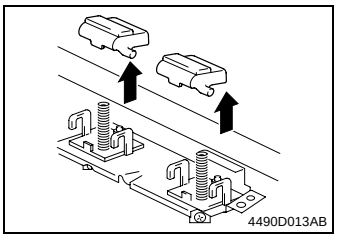

11. Remove the Separator Pads.

2 ADJUSTMENTS

2-1. Adjustment of Skew in the ADF

Requirement: Skew should be 0.35% or less with respect to the document length. For A4 crosswise: 1.0 mm

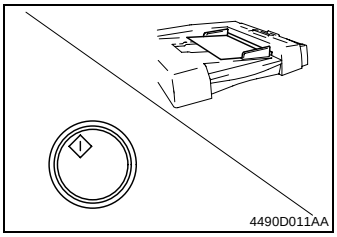

1. Slide out all drawers from the copier.
2. Load an original in the Document Feed Tray and select 1-Sided mode.
3. Press the Start key.
4. Gently raise the ADF.

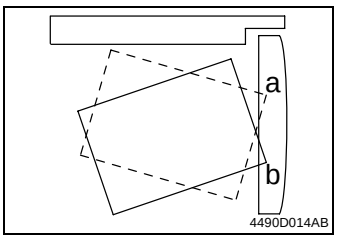

5. Check in which direction, a or b, the original positioned on the Original Glass tilts.

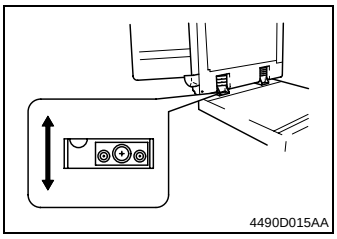

6. Loosen the three screws of the left hinge.
7. If the original tilts in the direction of a, move the ADF to the front.
   If the original tilts in the direction of b, move the ADF to the rear.
8. Tighten the three screws.

✻ After this adjustment has been made, perform the following steps: Adjustment of the Document Feed Tray Reference Position and Adjustment of the Document Stop Position in each mode.

2-2. Adjustment of the Document Feed Tray Reference Position

Requirement: The deviation of the edge of the original with respect to the Original Length Scale should be 4 ± 1 mm.

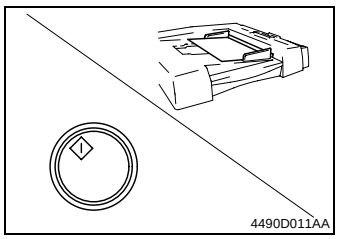

1. Slide out all drawers from the copier.
2. Load an original in the Document Feed Tray and select 1-Sided mode.
3. Press the Start key.
4. Gently raise the ADF.

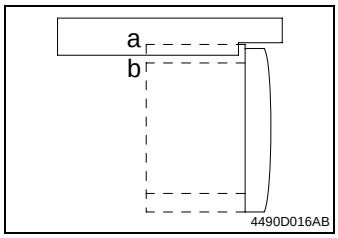

5. Check in which direction, a or b, the original positioned on the Original Glass deviates with respect to the Original Length Scale.

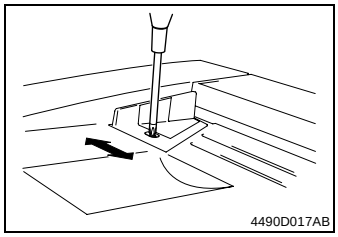

6. Loosen the screw shown.
7. If the original deviates in the direction of a, move the Document Feed Guide to the front.
   If the original deviates in the direction of b, move the Document Feed Guide to the rear.
8. Tighten the screw.

2-3. Adjustment of the Single Feed Tray Reference Position

Requirement: The deviation of the edge of the original with respect to the Original Length Scale should be 4 ± 1 mm.

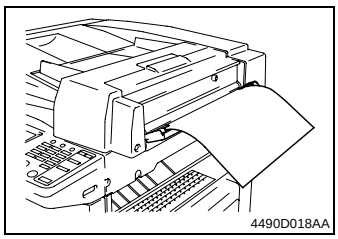

1. Slide out all drawers from the copier.
2. Insert an original into the Single Feed Tray.
3. Gently raise the ADF.

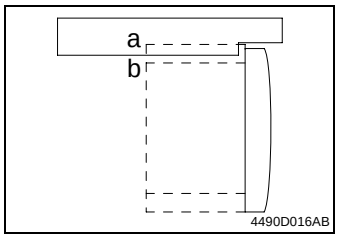

4. Check in which direction, a or b, the original positioned on the Original Glass deviates with respect to the Original Length Scale.

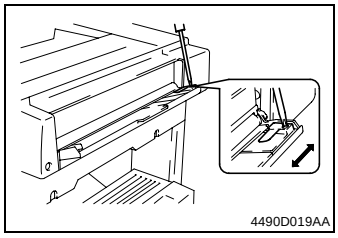

5. Loosen the screw shown.
6. If the original deviates in the direction of a, move the Single Feed Guide to the front.
   If the original deviates in the direction of b, move the Single Feed Guide to the rear.
7. Tighten the screw.

2-4. Adjustment of the Document Stop Position in the 1-Sided and 1-Sided Mixed Original Mode

Requirement: The deviation of the edge of the original with respect to the Original Width Scale should be 0 ± 1 mm.

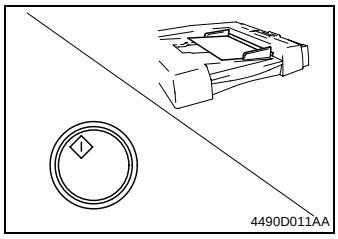

1. Slide out all drawers from the copier.
2. Load an original in the Document Feed Tray and select the 1 → 1 mode.
3. Press the Start key.
4. Gently raise the ADF.

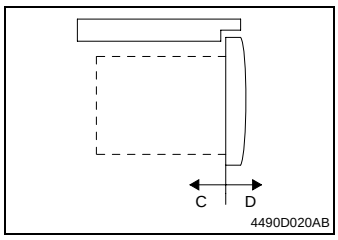

5. Determine how much (in mm) the original positioned on the Original Glass is off in the direction of C or D with respect to the Original Width Scale.

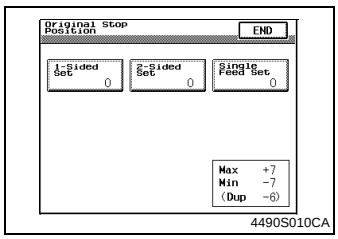

6. Select the functions in the following order: Tech. Rep. Mode → Tech. Rep. Choice → ADFR → Original Stop Position → 1-Sided Set.
7. Referring to “Document Stop Position Setting Procedure” on p. D-9, adjust the document stop position.

2-5. Adjustment of the Document Stop Position in the 2-Sided Mode

Requirement: The deviation of the edge of the original with respect to the Original Width Scale should be 0 ± 1 mm.

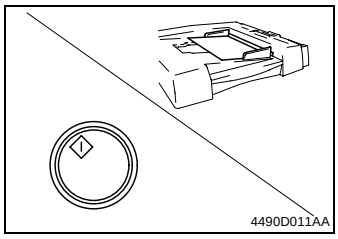

1. Load an original in the Document Feed Tray and select the 2 → 2 mode.
2. Press the Start key.
3. When the second face of the original is positioned on the Original Glass, open the Take-Up Cover.

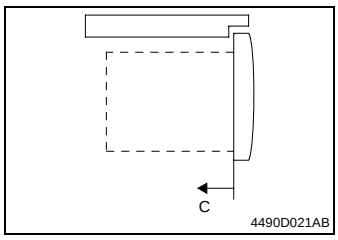

4. Gently raise the ADF.
5. Determine how much (in mm) the original positioned on the Original Glass is off in the direction of C with respect to the Original Width Scale.

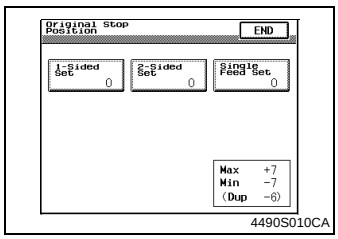

6. Select the functions in the following order: Tech. Rep. Mode → Tech. Rep. Choice → ADFR → Original Stop Position → 2-Sided Set.
7. Referring to “Document Stop Position Setting Procedure” on p. D-9, adjust the document stop position.

2-6. Adjustment of the Document Stop Position in the Single Feed Mode

Requirement: The deviation of the edge of the original with respect to the Original Width Scale should be 0 ± 1 mm.

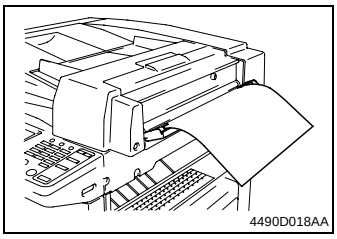

1. Slide out all drawers from the copier.
2. Select the 1 → 1 mode and insert an original into the Single Feed Tray.
3. Gently raise the ADF.

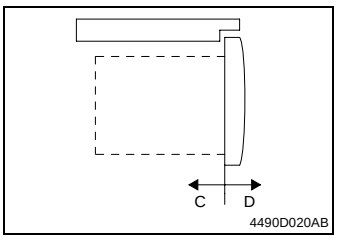

4. Determine how much (in mm) the original positioned on the Original Glass is off in the direction of C or D with respect to the Original Width Scale.

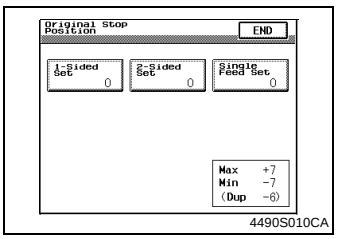

5. Select the functions in the following order: Tech. Rep. Mode → Tech. Rep. Choice → ADFR → Original Stop Position → Single Feed Set.
6. Referring to procedure given below, adjust the document stop position.

Document Stop Position Setting Procedure:

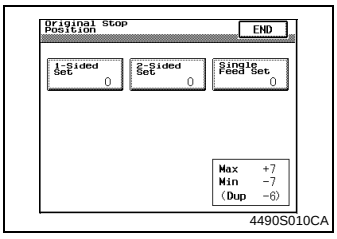

1. Select the appropriate paper passage mode (the selected mode is highlighted).
2. Using the Clear key, clear the numeric value.
3. Enter the new value from the 10-Key Pad. (Use the ✻ key to change the sign.)

- Select + to move in the direction of C.
- Select - to move in the direction of D.

4. Touch [END].
5. Make the paper passage check.

2-7. Adjustment of Turnover/Exit Switching Solenoid SL1

Requirement: The Turnover/Exit Switching Plate should be positioned in contact with the rib on the exit guide plate.

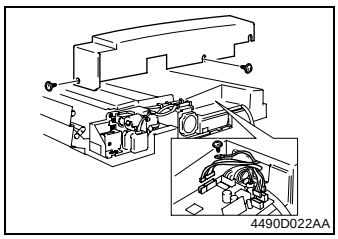

1. Remove two screws shown and the Rear Cover.
2. Unplug the connectors and remove the ground wire.

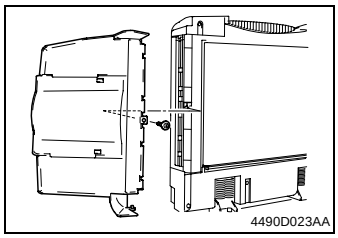

3. Remove one screw shown and the Document Exit Tray.

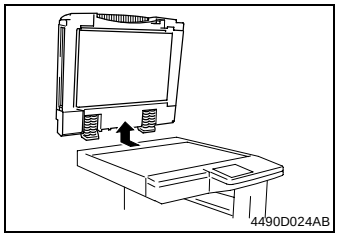

4. Remove the ADF from the copier.
5. Remove the Transport Belt Roller Assy. (See “2-1. Removal of the Transport Belt.”)

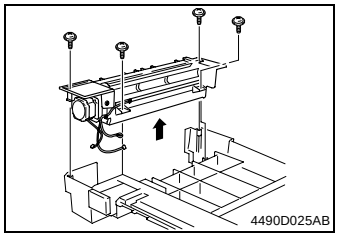

6. Remove the four screws shown and the Turnover/ Exit Assy.

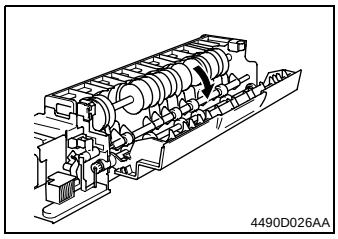

7. Open the Exit Cover.

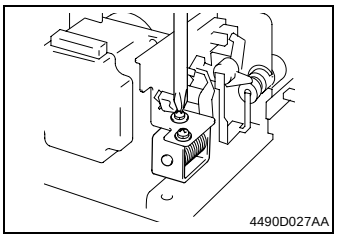

8. Loosen two screws that secure Turnover/Exit Switching Solenoid.

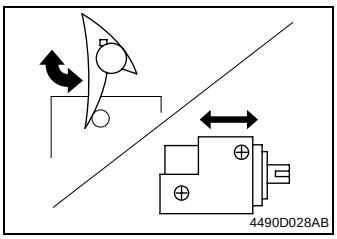

9. With Turnover/Exit Switching Solenoid in the energized position, move the Turnover/Exit Switching Solenoid body to the right and left to find a position at which the Turnover/Exit Switching Plate is in contact with the rib on the exit guide plate. Then, secure Turnover/Exit Switching Solenoid.

TROUBLESHOOTING

General Precautions

1. When servicing the ADF with its covers removed, use utmost care to prevent your hands, clothing and tools from being caught in moving parts.
2. Before attempting to replace parts and unplugging connectors, make sure that no power is being supplied from the copier.
3. When creating a closed circuit and measuring a voltage across connector pins specified in the text, be sure to use the green wire (GND).
4. Keep all disassembled parts in good order and keep tools under control so that none will be lost or damaged.

Reading the Text

1. If a component on a PWB or any other functional unit including a motor is defective, the text only instructs you to replace the whole PWB or functional unit and does not give troubleshooting procedure applicable within the defective unit.
2. The text assumes that there are no breaks and shorts in the harnesses and all connectors are plugged into the right positions.

1 MISFEED DETECTION

- When a misfeed or malfunction is detected in the ADF, the corresponding code as detailed below is shown on the copier Touch Panel.
- In addition, the LEDs on PWB-A of the ADF blink or remain OFF, as detailed below, to indicate the type of misfeed or malfunction.

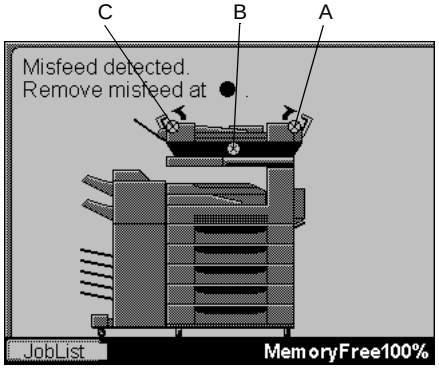

4490S011CA

Touch Panel Code, LED Indication, and Detection Timing of Each Misfeed/Malfunction

Touch Panel Code	LED Indication					Description	Detection Timing
A	◎	❍	❍	❍	◎	Document not reaching Registration Sensor PC2	PC2 is not blocked even after the lapse of 1025 msec. after Take-Up Motor M2 has been energized.
	◎	❍	❍	◎	❍	Document staying at Registration Sensor PC2	PC2 is not unblocked even after the lapse of 1010 msec. after Main Drive Motor M3 has been energized.
	◎	❍	◎	◎	◎	Document staying at Single Feed Empty Sensor PC9	PC9 is not unblocked even after the lapse of 2125 msec. after Main Drive Motor M3 has been energized.
	◎	❍	◎	◎	❍	Pick-Up Motor M1 malfunction	Pick-Up Motor Pulse Sensor PC8 is not blocked or unblocked even after the lapse of 1000 msec. after M1 has been energized.

(Blinking: ◎ OFF: ❍)

Touch Panel Code	LED Indication					Description	Detection Timing
B	◎	◎	◎	◎	◎	Document left (before operation is started)	When an original is loaded in the Document Feed Tray with all closures in the closed position, a sensor in the document path is blocked.
	◎	❍	◎	❍	◎	Document left (after operation is started)	Exit Sensor PC3 is blocked before the original is positioned after it has been taken up.
C	◎	❍	❍	◎	◎	Document not reaching Exit Sensor PC3	PC3 is not unblocked even after the lapse of 1205 msec. after Main Drive Motor M3 has been energized.
	◎	❍	◎	❍	❍	Document staying at Exit Sensor PC3	PC3 is not blocked even after the lapse of 1225 msec. after M3 has been energized.
	◎	◎	❍	❍	❍	Document not reaching Turnover Sensor PC4	PC4 is not blocked even after the lapse of 1215 msec. after M3 has been energized (to turn forward).
	◎	◎	❍	❍	◎	Document staying at Turnover Sensor PC4	PC4 is not unblocked even after the lapse of 995 msec. after M3 has been energized (to turn backward).

(Blinking: ◎ OFF: ❍)

2 MISFEED TROUBLESHOOTING PROCEDURES

1. Check the code shown on the Touch Panel.
2. Check the LED indication to identify the detail of the misfeed.
3. Determine the problem.
4. Perform the check procedures according to the problem.

A. Document Not Reaching Registration Sensor PC2

Problem	Step No.	Check Item	Result	Action
• The original is not taken up at all. • The original is stationary before PC2.	1	Does the document being used meet the specifications for reliable feeding?	NO	Instruct the user to use the document that meets the specifications for reliable feeding.
	2	Has the capacity of the Document Feed Tray been exceeded?	YES	Instruct the user not to exceed the capacity.
	3	Is any of the Take-Up Rolls, Pick-Up Rolls, or Separator Pads deformed, worn, or dirty with paper dust?	YES	Clean or replace the defective part.
	4	Are the Pick-Up Rolls pressing the document?	NO	Check the pick-up mechanism.
	5	Carry out a unit check of Take-Up Motor M2 to determine if it is operational.	YES	Replace PWB-A.
			NO	Replace M2.
• The original has been transported to PC2.	1	Carry out a sensor check of PC2 to determine if it is operational.	YES	Replace PWB-A.
	2	Does the voltage across PJ9A-11 on PWB-A and GND change from DC5V to DC0V when PC2 is blocked with a sheet of paper?	YES	Replace PWB-A.
			NO	Replace PC2.

B. Document Staying at Registration Sensor PC2

Problem	Step No.	Check Item	Result	Action
• The trailing edge of the original is yet to move past PC2.	1	Does the document being used meet the specifications for reliable feeding?	NO	Instruct the user to use the document that meets the specifications for reliable feeding.
	2	Is the Registration Roller deformed, worn, or dirty?	YES	Clean or replace the Registration Roller.
	3	Carry out a unit check of PC2 to determine if it is operational.	YES	Go to step 5.
	4	Does the voltage across PJ9A-11 on PWB-A and GND change from DC0V to DC5V when PC2 is changed from the blocked to unblocked state with a sheet of paper?	YES	Replace PWB-A.
			NO	Replace PC2.
	5	Is the Transport Belt worn or dirty?	YES	Clean or replace the Transport Belt.
	6	Is the Original Glass dirty?	YES	Clean or replace the Original Glass.
	7	Carry out a unit check of Main Drive Motor M3 to determine if it is operational.	YES	Replace PWB-A.
			NO	Replace M3.
• Two or more originals are taken up at once.	1	Does the document being used meet the specifications for reliable feeding?	NO	Instruct the user to use the document that meets the specifications for reliable feeding.
	2	Is any of the Take-Up Rolls, Pick-Up Rolls, or Separator Pads deformed, worn, or dirty with paper dust?	YES	Clean or replace the defective part.

C. Document Staying at Single Feed Empty Sensor PC9

Problem	Step No.	Check Item	Result	Action
• The original is not taken up at all. • The trailing edge of the original is yet to move past PC9.	1	Does the document being used meet the specifications for reliable feeding?	NO	Instruct the user to use the document that meets the specifications for reliable feeding.
	2	Carry out a unit check of PC9 to determine if it is operational.	YES	Go to step 4.
	3	Does the voltage across PJ9A-14 on PWB-A and GND change from DC0V to DC5V when PC9 is changed from the blocked to unblocked state with a sheet of paper?	YES	Replace PWB-A.
			NO	Replace PC9.
	4	Is the Transport Belt worn or dirty?	YES	Clean or replace the Transport Belt.
	5	Is the Original Glass dirty?	YES	Clean or replace the Original Glass.
	6	Carry out a unit check of Main Drive Motor M3 to determine if it is operational.	YES	Replace PWB-A.
			NO	Replace M3.

D. Misfeed Detected When Document is Loaded or Immediately After Start Key Has Been Pressed

Problem	Step No.	Check Item	Result	Action
• An ADF misfeed is displayed on the Touch Panel when a document is loaded in the Document Feed Tray. • An ADF misfeed is displayed on the Touch Panel immediately after the Start key has been pressed.	1	Is there an original left in the ADF?	YES	Remove the original.
	2	If the felt paper of Registration Sensor PC2 dirty or separated?	YES	Clean or replace the felt paper.
	3	Carry out a unit check of each sensor placed along the document path to determine if it is operational.	YES	Replace PWB-A.
			NO	Replace the defective sensor.

E. Document Not Reaching Exit Sensor PC3

Problem	Step No.	Check Item	Result	Action
• The original is stationary before PC3.	1	Does the document being used meet the specifications for reliable feeding?	NO	Instruct the user to use the document that meets the specifications for reliable feeding.
	2	Is the Transport Belt worn or dirty?	YES	Clean or replace the Transport Belt.
	3	Is the Original Glass dirty?	YES	Clean or replace the Original Glass.
	4	Carry out a sensor check of PC3 to determine if it is operational.	YES	Go to step 6.
	5	Does the voltage across PJ11A-2 on PWB-A and GND change from DC5V to DC0V when PC3 is blocked with a sheet of paper?	YES	Replace PWB-A.
			NO	Replace PC3.
	6	Carry out a unit check of Main Drive Motor M3 to determine if it is operational.	YES	Replace PWB-A.
			NO	Replace M3.

F. Document Staying at Exit Sensor PC3

Problem	Step No.	Check Item	Result	Action
• The trailing edge of the original is yet to move past PC3.	1	Does the document being used meet the specifications for reliable feeding?	NO	Instruct the user to use the document that meets the specifications for reliable feeding.
	2	Is the Transport Belt worn or dirty?	YES	Clean or replace the Transport Belt.
	3	Is the Original Glass dirty?	YES	Clean or replace the Original Glass.
	4	Carry out a unit check of PC3 to determine if it is operational.	YES	Go to step 6.
	5	Does the voltage across PJ11A-2 on PWB-A and GND change from DC0V to DC5V when PC3 is changed from the blocked to unblocked state with a sheet of paper?	YES	Replace PWB-A.
			NO	Replace PC3.
	6	Carry out a unit check of Main Drive Motor M3 to determine if it is operational.	YES	Replace PWB-A.
			NO	Replace M3.

G. Document Not Reaching Turnover Sensor PC4

Problem	Step No.	Check Item	Result	Action
• The original is stationary before PC4.	1	Does the document being used meet the specifications for reliable feeding?	NO	Instruct the user to use the document that meets the specifications for reliable feeding.
	2	Is the Transport Belt worn or dirty?	YES	Clean or replace the Transport Belt.
	3	Is the Original Glass dirty?	YES	Clean or replace the Original Glass.
	4	Carry out a sensor check of PC4 to determine if it is operational.	YES	Go to step 6.
	5	Does the voltage across PJ3A-5 on PWB-A and GND change from DC5V to DC0V when PC4 is blocked with a sheet of paper?	YES	Replace PWB-A.
			NO	Replace PC4.
	6	Carry out a unit check of Main Drive Motor M3 to determine if it is operational.	YES	Replace PWB-A.
			NO	Replace M3.

H. Document Staying at Turnover Sensor PC4

Problem	Step No.	Check Item	Result	Action
• The trailing edge of the original is yet to move past PC4.	1	Does the document being used meet the specifications for reliable feeding?	NO	Instruct the user to use the document that meets the specifications for reliable feeding.
	2	Is the Turnover Roller deformed, worn, or dirty?	YES	Clean or replace the Turnover Roller.
	3	Is the Transport Belt worn or dirty?	YES	Clean or replace the Transport Belt.
	4	Is the Original Glass dirty?	YES	Clean or replace the Original Glass.
	5	Carry out a sensor check of PC4 to determine if it is operational.	YES	Go to step 7.
	6	Does the voltage across PJ3A-5 on PWB-A and GND change from DC5V to DC0V when PC4 is blocked with a sheet of paper?	YES	Replace PWB-A.
			NO	Replace PC4.
	7	Carry out a unit check of Turnover/Exit Motor M4 to determine if it is operational.	YES	Replace PWB-A.
			NO	Replace M4.
	8	Carry out a unit check of Main Drive Motor M3 to determine if it is operational.	YES	Replace PWB-A.
			NO	Replace M3.
• An original is caught by the Turnover/Exit Switching Plate.	1	Does the Turnover/Exit Switching Plate operate abnormally?	YES	Replace the Turnover/Exit Switching Plate.
	2	Carry out a unit check of Turnover/Exit Switching Solenoid SL1 to determine if it is operational.	YES	Replace PWB-A.
			NO	Replace SL1.