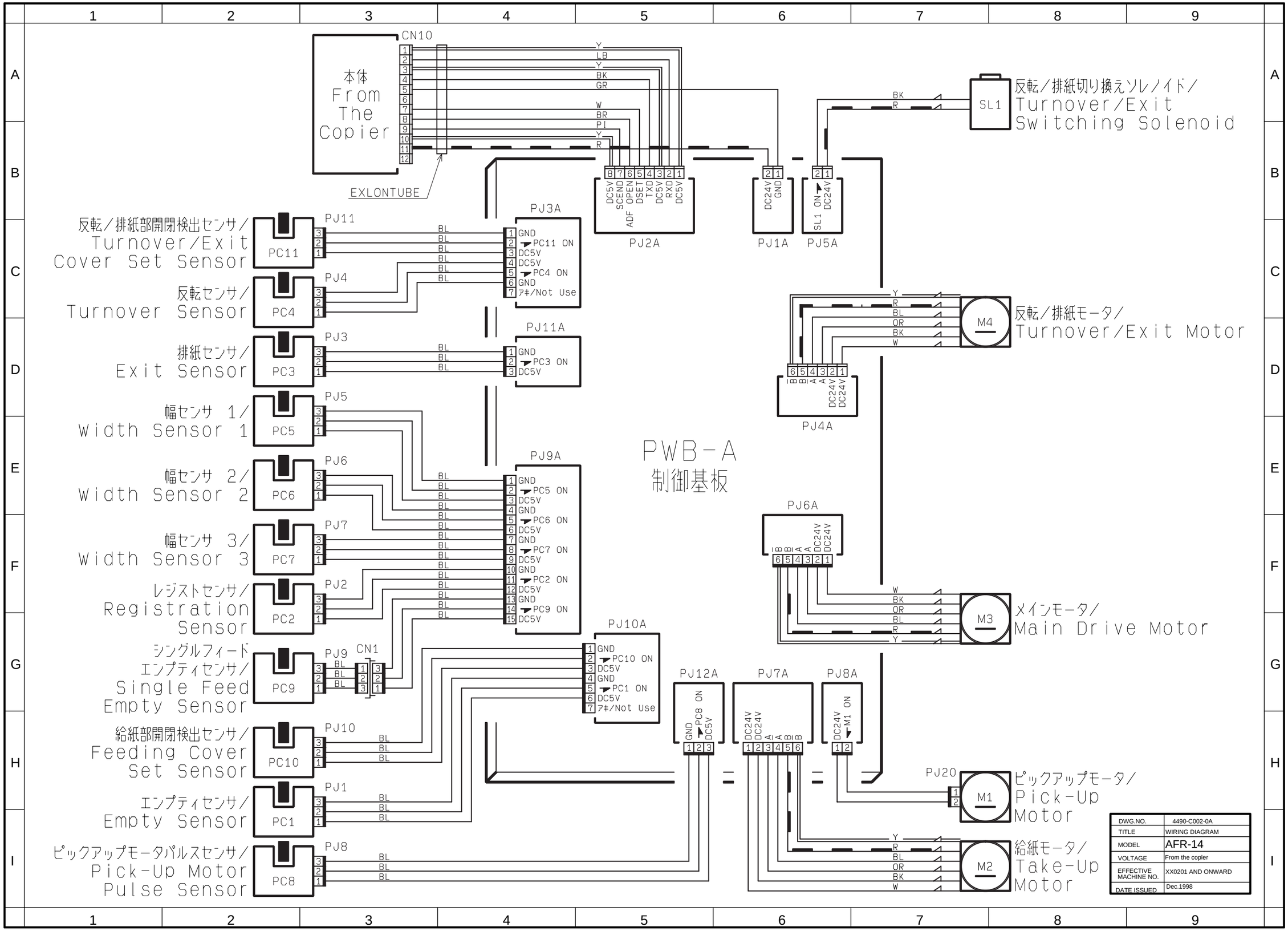

DWG.NO.	4490-C002-0A
TITLE	WIRING DIAGRAM
MODEL	AFR-14
VOLTAGE	From the copier
EFFECTIVE MACHINE NO.	XX0201 AND ONWARD
DATE ISSUED	Dec.1998