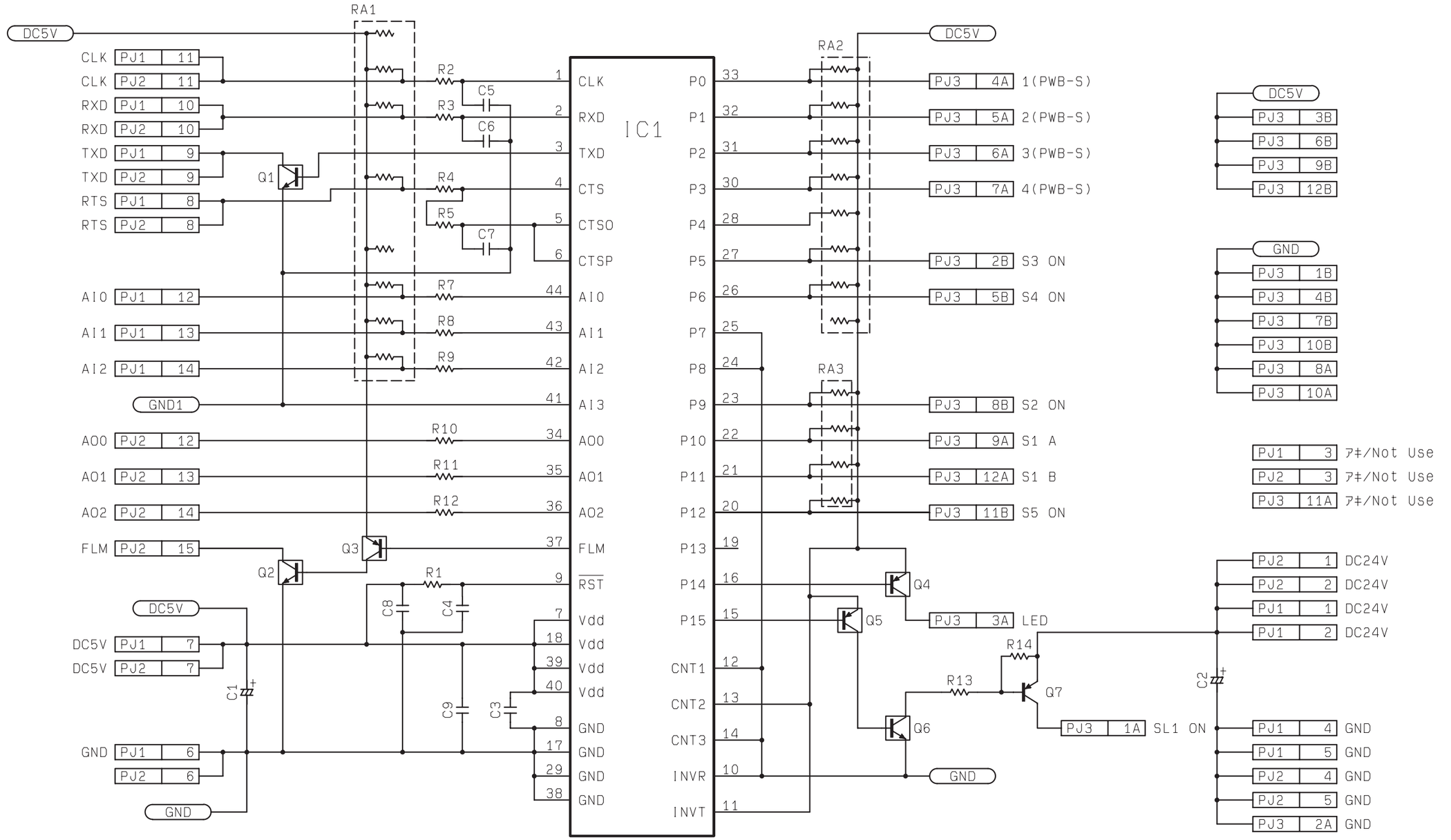

DWG.NO.	4498-C201-0A
TITLE	WIRING DIAGRAM PWB-A
MODEL	PF-108/PF-110
VOLTAGE	From the copier
EFFECTIVE MACHINE NO.	XX0201 AND ONWARD
DATE ISSUED	Dec.1998