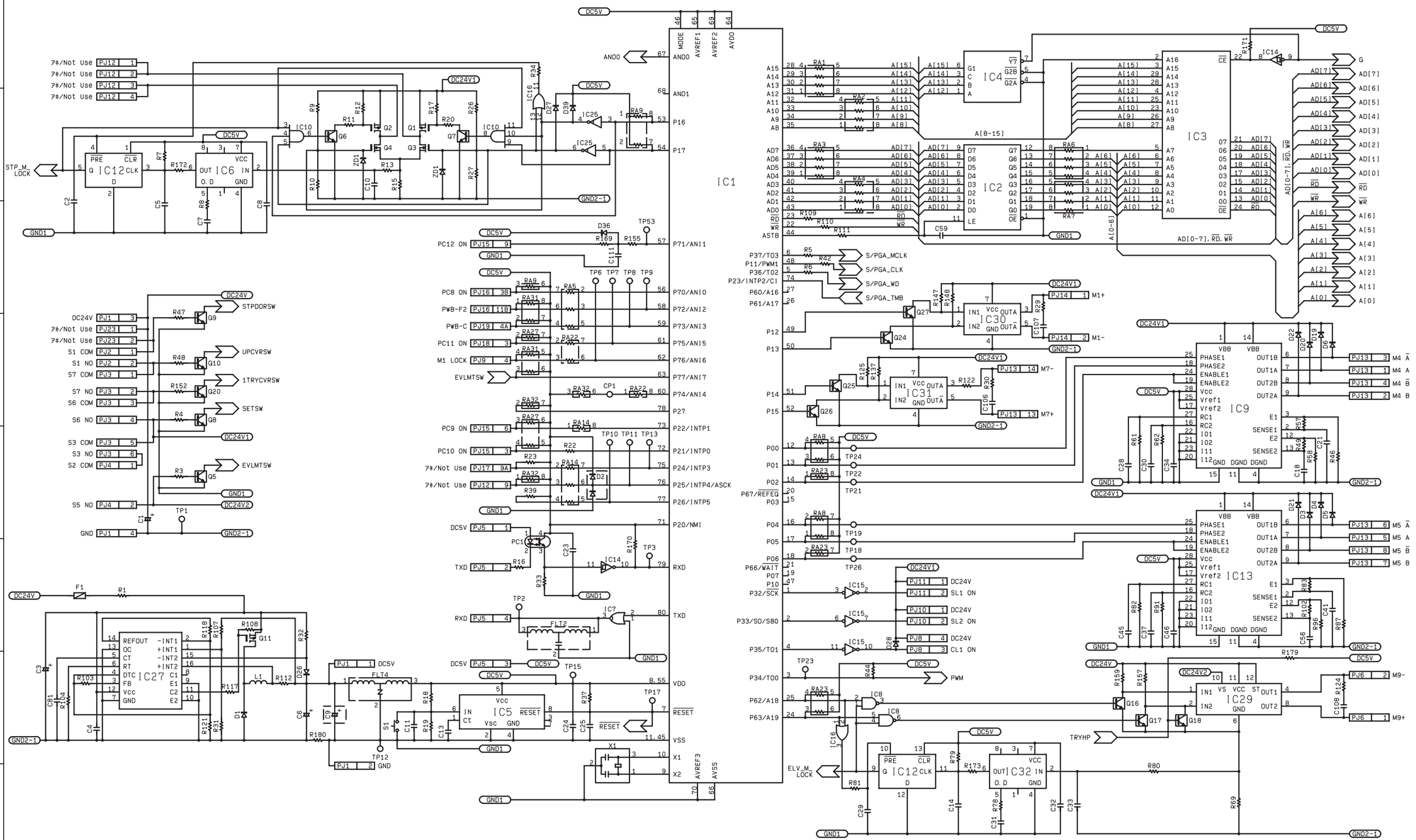

DWG.NO.	4612-C201-0A
TITLE	CIRCUIT DIAGRAM PWB-A 1/3
MODEL	FN-100/FN-500
VOLTAGE	From the copier
EFFECTIVE MACHINE NO.	XX0201 AND ONWARD
DATE ISSUED	Dec.1998