FrameMaker Ver.5.5(PC) JS-200/OT-100 OPTION FOR Di350
98.12.18

JS-200/OT-100

SERVICE MANUAL

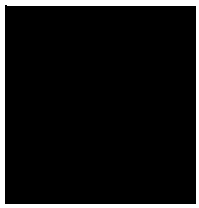

MINOLTA

18605

CONTENTS

GENERAL, MECHANICAL/ELECTRICAL
1. SPECIFICATIONS M-1
2. PART IDENTIFICATION M-2
3. CROSS-SECTIONAL VIEW M-3
4. DRIVE SYSTEM M-4
5. ELECTRICAL COMPONENTS LAYOUT M-5
6. OPERATION OF EACH MECHANISM M-7
   6-1. Paper Transport Mechanism M-7
      (1) Paper Transport Path M-7
      (2) Paper Exit Roller Drive M-7
      (3) Control of Transport Motor M-8
   6-2. Full-of-Paper Detecting Mechanism M-9
      (1) Job Tray M-9
      (2) Shift Tray M-10
   6-3. Exit Path Switching Mechanism M-11
      (1) Job Tray M-11
      (2) Shift Tray M-11
   6-4. Initial Operation M-12
      (1) Shift Tray Home Position Detection M-12
   6-5. Paper Misfeed Removal Door Set Detection M-13

DIS/REASSEMBLY, ADJUSTMENT
1. DISASSEMBLY D-1
   1-1. PM List D-1
   1-2. Removal of the Exterior Covers D-1
   1-3. Cleaning of the Paper Exit Roller D-2
2. ADJUSTMENT D-2

TROUBLESHOOTING
1. PAPER MISFEED DETECTION AND TROUBLESHOOTING PROCEDURES T-1
   1-1. Misfeed Detection T-1
   1-2. Misfeed Troubleshooting Procedures T-1
2. MALFUNCTION DETECTION AND TROUBLESHOOTING PROCEDURES . T-2
   2-1. Malfunction Detection (Shift Tray only) T-2
   2-2. Malfunction Troubleshooting Procedures T-2

NOTE

Throughout the entire text of this manual, the following product codes are used to denote the products covered in this manual:

- *JS-200: Job Tray*
- *OT-100: Shift Tray*

GENERAL, MECHANICAL/ELECTRICAL



1 SPECIFICATIONS

Type	: Job Tray: Straight ejection (Paper Path Switching Type Job Tray) Shift Tray: Straight ejection (Job Offset Tray)
Installation	: Desktop
Copy Media	: Plain paper weighing 60 to 90 g/m², OHP transparencies, heavy paper (91 to 163 g/m²), postcards, envelopes
Size	: Job Tray: A3 to A6L (11”×17” to 4”×5-3/4”L) Shift Tray: A3 to A6L (11”×17” to 4”×5-3/4”L) (in Non-Sort mode) A3 to A5C (11”×17” to 5-1/2”×8-1/2”C) (in Sort or Group mode)
Max. Capacity	: Plain paper: Job Tray: 100 sheets (Upper Exit Tray) + 250 sheets (Lower Exit Tray) Shift Tray: 250 sheets (Exit Tray) Transparencies, thick paper, postcards, envelopes: Job Tray: 20 sheets (Lower Exit Tray) Shift Tray: 20 sheets (Exit Tray)
Power Requirements	: DC24V ±10%, DC5V ±5% (supplied from copier)
Max. Power Consumption	: 26W or less
Dimensions	: 486 (W) × 500 (D) × 201 (H) mm (Job Tray) (19-1/4” (W) × 19-3/4” (D) × 8” (H)) 490 (W) × 556 (D) × 201 (H) mm (Shift Tray) (19-1/4” (W) × 22” (D) × 8” (H))
Weight	: Job Tray: 4.7 kg (10-1/4 lbs) (including bracket) Shift Tray: 6.8 kg (15 lbs) (including bracket)
Environmental Requirements	: Same as copier

2 PART IDENTIFICATION

<Job Tray>

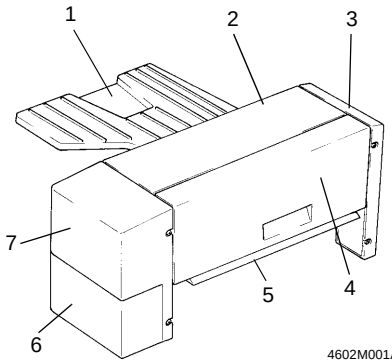

4602M001AA

<Shift Tray>

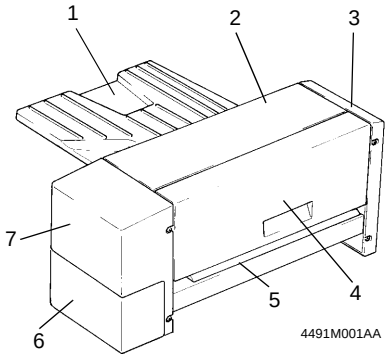

4491M001AA

1. Exit Tray
2. Top Cover
3. Rear Cover
4. Paper Misfeed Removal Door
5. Exit Path Switching Plate
6. Lower Front Cover
7. Front Cover

3 CROSS-SECTIONAL VIEW

<Job Tray>

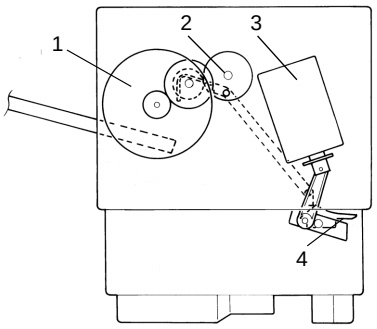

4602M002AA

<Shift Tray>

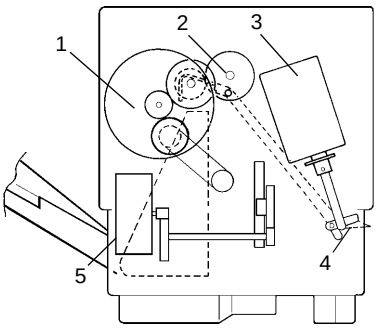

4491M002AA

1. Transport Motor M1
2. Paper Exit Roller
3. Path Switching Solenoid SL1
4. Exit Path Switching Plate
5. Shift Motor M2 (Shift Tray only)

4 DRIVE SYSTEM

<Job Tray>

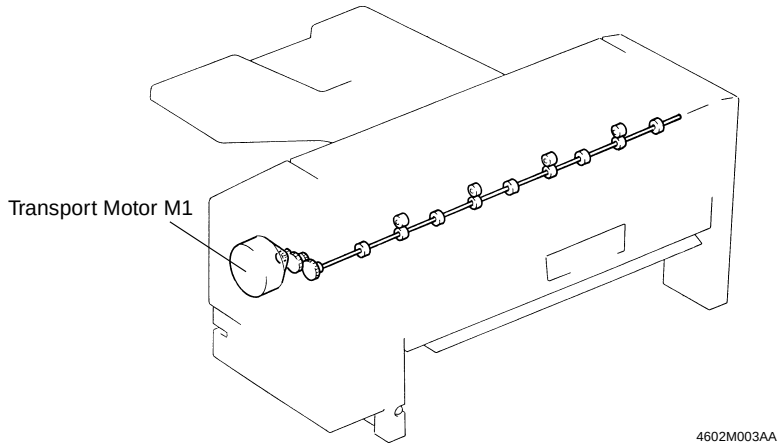

<Shift Tray>

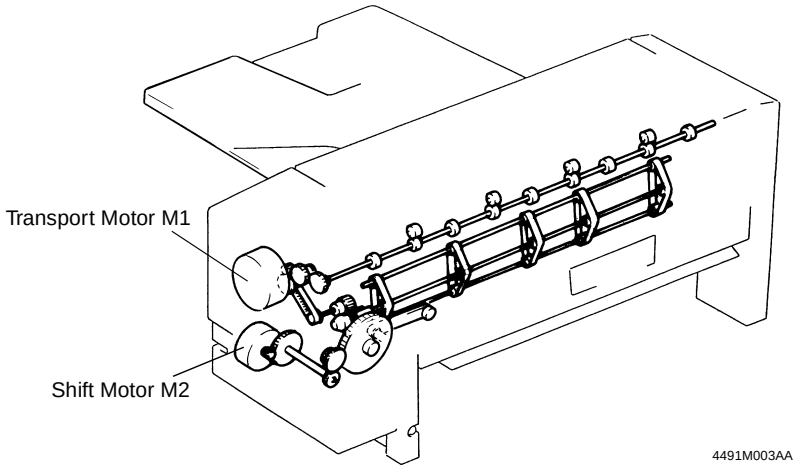

5 ELECTRICAL COMPONENTS LAYOUT

<Job Tray>

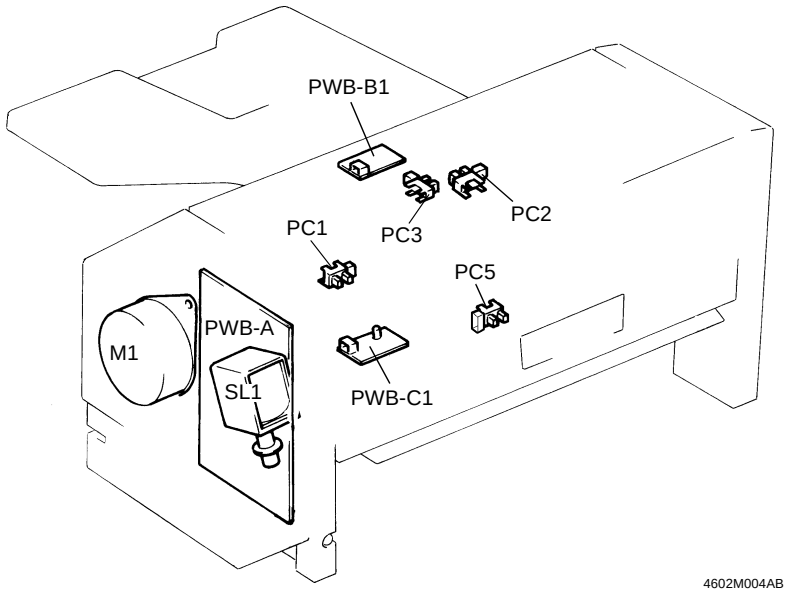

Symbol	Name	Symbol	Name
PWB-A	Main Board	PC1	Paper Misfeed Removal Door Set Sensor
PWB-B1	Upper Empty Sensor PQ Board	PC2	Upper Full Detecting Sensor
PWB-C1	Upper Empty Sensor LED Board	PC3	Upper Exit Sensor
M1	Transport Motor	PC5	Lower Full Detecting Sensor
SL1	Path Switching Solenoid		

<Shift Tray>

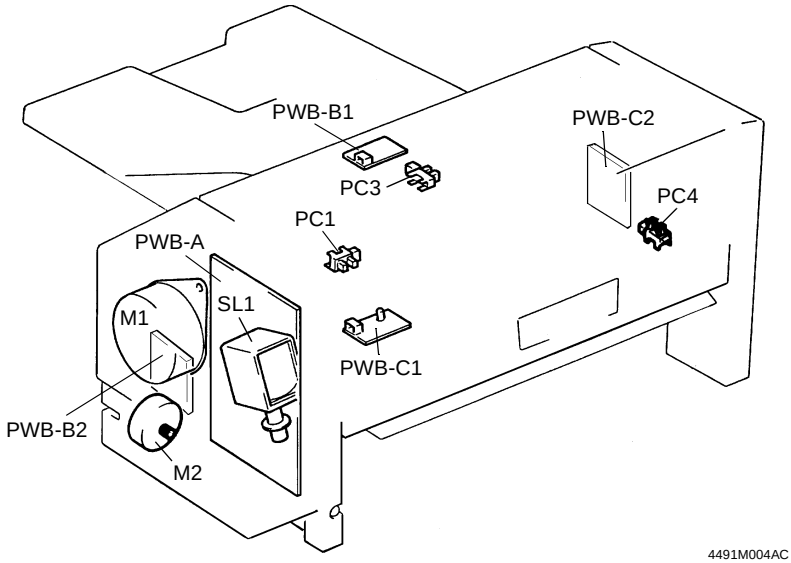

Symbol	Name	Symbol	Name
PWB-A	Main Board	M2	Shift Motor
PWB-B1	Upper Empty Sensor PQ Board	SL1	Path Switching Solenoid
PWB-C1	Upper Empty Sensor LED Board	PC1	Paper Misfeed Removal Door Set Sensor
PWB-B2	Upper Full Sensor PQ Board	PC3	Upper Exit Sensor
PWB-C2	Upper Full Sensor LED Board	PC4	Shift Home Sensor
M1	Transport Motor		

6 OPERATION OF EACH MECHANISM

6-1. Paper Transport Mechanism

(1) Paper Transport Path

A sheet of paper fed out of the copier by the Paper Exit Roller/Rolls of the copier is fed through, and out of, this unit by the unit's Paper Exit Roller onto the unit's Exit Tray.
Since this unit is mounted directly on top of the copier, Section over the copier Exit Tray, it serves as an upper exit tray. The tray into which paper is fed out is selected depending on the copying mode.

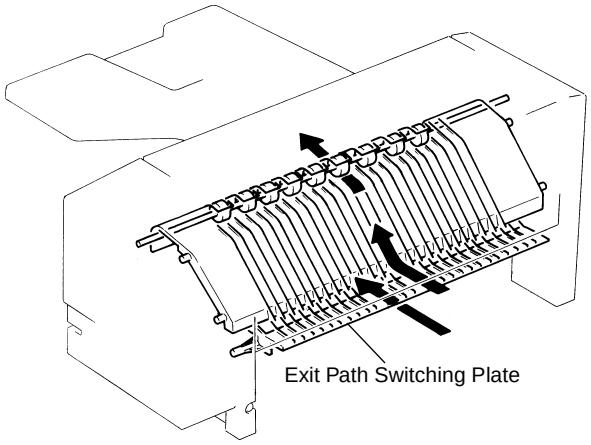

4602M005AA

(2) Paper Exit Roller Drive

The Paper Exit Roller is driven by Transport Motor.

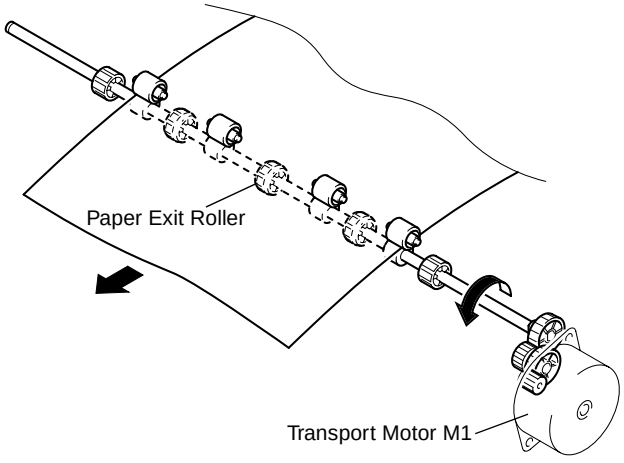

4602M006AB

(3) Control of Transport Motor

A two-phase stepping motor is used as Transport Motor. The motor is turned as the pulse signals output from PJ8A-1 to 4 are applied to it. The direction of the motor rotation is switched by changing the output sequence of these pulse signals.

PJ8A	Step			
	1	2	3	4
1	L	L	H	H
2	H	H	L	L
3	L	H	H	L
4	H	L	L	H
Forward Rotation	→			

Transport Motor is energized when the paper fed through the copier during a copy cycle activates the Paper Exit Sensor of the copier if the Upper Exit Tray is selected as the exit port.
It is deenergized if the Paper Exit Sensor of the copier is not activated even after the lapse of 1 sec. after Upper Exit Sensor has been deactivated.

6-2. Full-of-Paper Detecting Mechanism

(1) Job Tray

- Paper is fed into the Upper Exit Tray or Lower Exit Tray depending on the copy mode. The paper being fed into the tray operates the actuator, which unblocks and blocks the Upper or Lower Full Detecting Sensor to allow the system to detect a full-of-paper condition.

(Upper Exit Tray)
A full-of-paper condition is detected when the Upper Full Detecting Sensor remains unblocked for a continuous, given period time.

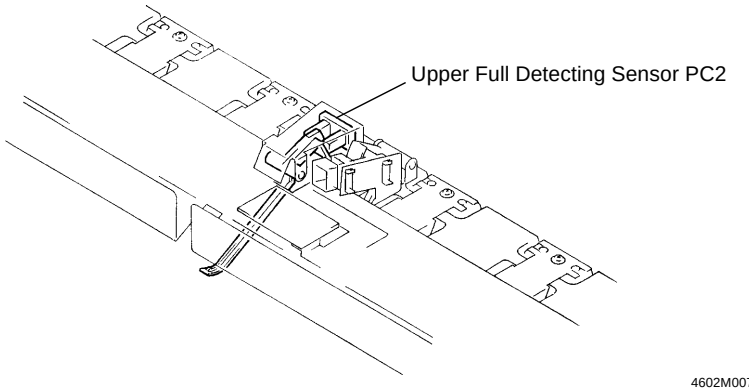

4602M007AA

(Lower Exit Tray)
A full-of-paper condition is detected when the Lower Full Detecting Sensor remains unblocked for a continuous, given period time.

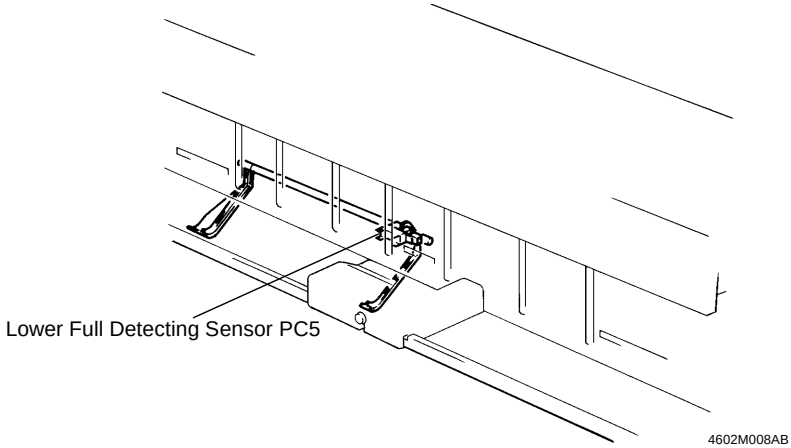

4602M008AB

(2) Shift Tray

In the Shift Tray, a photointerruptor (PWB-B2, -C2) is used. When light from the PWB-C2 LED is blocked by a sheet of paper being fed out onto the tray, a full-of-paper condition is detected.

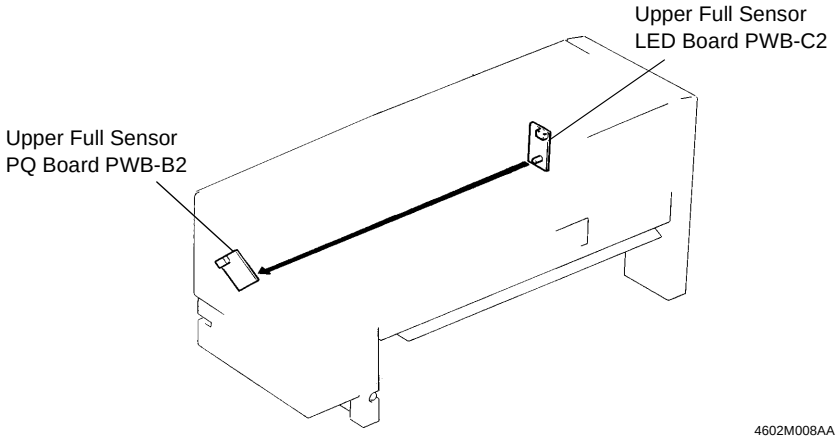

6-3. Exit Path Switching Mechanism

The paper path is selected by energizing or deenergizing Path Switching Solenoid SL1, which results in the Exit Path Switching Plate being swung down or up.

(1) Job Tray

The paper exit tray (Upper or Lower Exit Tray) is selected according to the setting made on the copier.
When the Lower Exit Tray is selected, the Path Switching Solenoid is deenergized a given period of time after the Paper Exit Sensor of the copier has been blocked, thereby feeding the paper into the Lower Exit Tray.
In the 2-sided copy mode, the paper fed into this unit is reversed (switchback) and fed back towards the Duplex Unit. (The Path Switching Solenoid is deenergized if the Paper Exit Sensor of the copier is not blocked within a given period of time after the switchback operation has been started.)

(2) Shift Tray

In the 2-sided copy mode, if the length of the paper being fed into this unit exceeds 150 mm, the Path Switching Solenoid is energized after a given period of time after the Paper Exit Sensor of the copier has been blocked to reverse the paper under the Exit Tray and feed it back into the Duplex Unit.
If the length of the paper being fed into the unit is 150 mm or less, the Path Switching Solenoid is deenergized after a given period of time after the Paper Exit Sensor of the copier has been blocked to transport the paper into the Exit Tray.

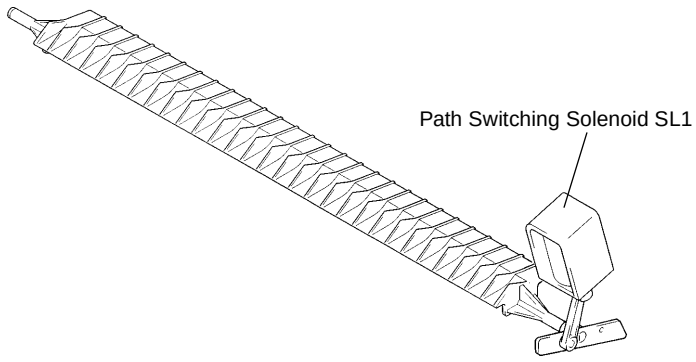

4602M009AA

	SL1 Energized	SL1 Deenergized
Job Tray	Paper fed into the Upper Exit Tray	Paper fed into the Lower Exit Tray
Shift Tray	For switchback to Duplex Unit	When feeding paper out

	Control Signal	ON	OFF
SL1	PJ6A-2	L	H

6-4. Initial Operation

The Transport Motor is energized at the same time when predrive of the copier is started (Job Tray/Shift Tray).
The unit carries out the Shift Tray home position detection sequence when the Power Switch of the copier is turned ON or when the Paper Misfeed Removal Door is opened and closed after a paper misfeed has been cleared (Shift Tray only).

(1) Shift Tray Home Position Detection

The unit determines that the Shift Tray is at its home position when the Shift Home Sensor is blocked by the light blocking plate.
(If the Shift Tray is at its home position)
The Shift Motor is energized (forward or backward rotation) so that the Shift Home Sensor is unblocked, then blocked again.
(If the Shift Tray is out of its home position)
The Shift Motor is energized until the Shift Home Sensor is blocked.

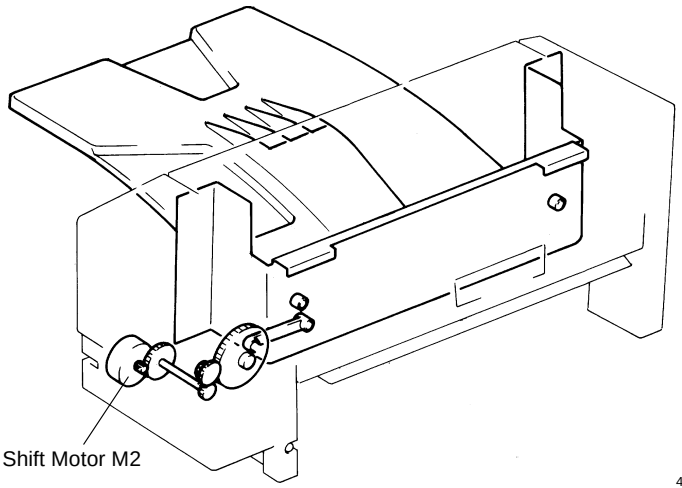

4491M005AA

6-5. Paper Misfeed Removal Door Set Detection

The Paper Misfeed Removal Door is detected at its closed position by the Paper Misfeed Removal Door Set Sensor. The unit determines that the door is left open if the sensor remains unblocked for a given period of time and that it is closed if the sensor remains blocked for a given period of time.

If the sensor is unblocked, a closure failure warning is given on the copier control panel and the copier inhibits the initiation of a new copy cycle.

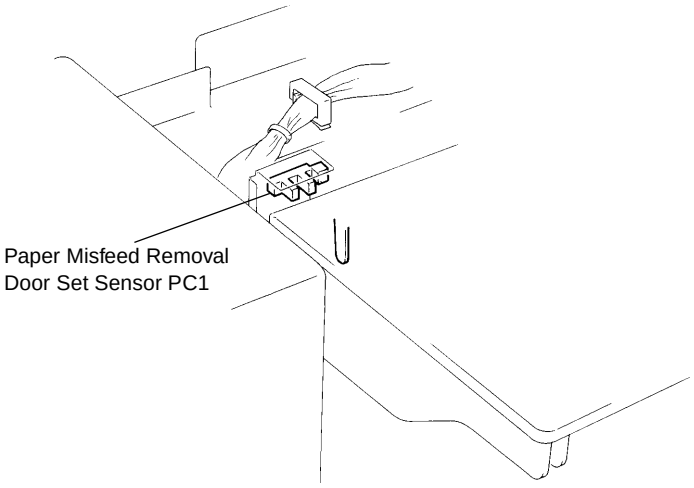

DIS/REASSEMBLY, ADJUSTMENT

Precautions for Disassembly, Reassembly, and Adjustment

- Before attempting to disassemble the unit, always make sure that no power is being supplied from the copier (by unplugging the power connector from the copier).
- While power is being supplied to the unit, do not attempt to remove/install the print jacks from/to the PWBs or unplug/plug in the connectors.
- If the unit is run with its covers removed, use care not to allow your clothing to be caught in revolving parts.
- The basic rule is do not run the unit with any of its parts removed.
- A toothed washer is used with the screw that secures the ground wire to ensure positive conduction. Do not forget to include this washer at reassembly.
- To reassemble the unit, reverse the order of disassembly unless otherwise specified.
- Do not attempt to remove or loosen the screws to which red paint has been applied.

1 DISASSEMBLY

1-1. PM List

PM Part Name	Cleaning (K)	Replacement (K)	Part No.	Qty	Ref. Page
Paper Exit Roller	300	-	4491-3101-02	1	D-2

1. The contents of the PM parts list are subject to change without notice.
2. K = 1,000 copies

1-2. Removal of the Exterior Covers

Job Tray

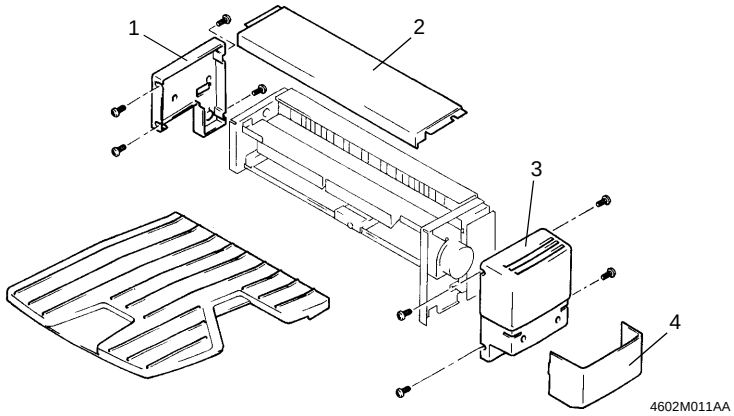

4602M011AA

Shift Tray

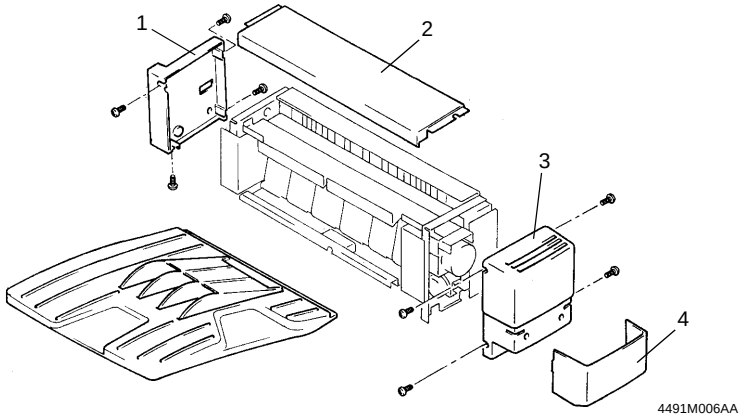

4491M006AA

1. Rear Cover: Loosen four screws and slide the cover toward to the rear.
2. Top Cover: Remove the Front and Rear Covers and lift the cover upward.
3. Front Cover: Remove the Lower Front Cover, loosen four screws, and slide the cover to the front.
4. Lower Front Cover: Unlock the tabs and slide the cover to the front.

1-3. Cleaning of the Paper Exit Roller

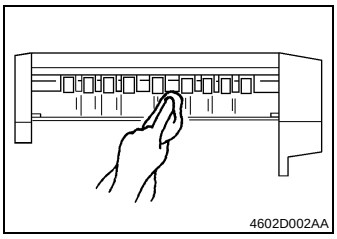

Wipe the surface of the Paper Exit Roller clean of dirt with a cloth dampened with alcohol.

2 ADJUSTMENT

Path Switching Solenoid Stroke Adjustment

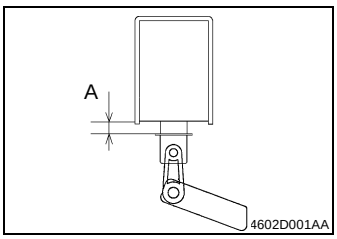

1. Remove the Main Board.
2. Loosen the two screws that secure the solenoid and adjust its position so that dimension A measures 5.2 to 4.7 mm (Job Tray) or 4.4 to 3.9 mm (Shift Tray).

TROUBLESHOOTING

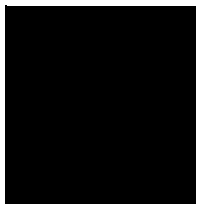

1 PAPER MISFEED DETECTION AND TROUBLESHOOTING PROCEDURES

1-1. Misfeed Detection

A paper misfeed is detected under any of the following conditions, causing a misfeed display to be given on the copier control panel.

Type	Detection Timing
Transport misfeed	The Upper Exit Sensor is not blocked within a given period of time after the Paper Exit Sensor of the copier has been blocked.
Paper left	The Upper Exit Sensor is blocked when the Power Switch is turned ON or a paper misfeed is reset.
Exit misfeed	The Upper Exit Sensor is not unblocked within a given period of time after the Paper Exit Sensor of the copier has been unblocked.

1-2. Misfeed Troubleshooting Procedures

Step	Check Item	Result	Action
1	Does the paper being used meet product specifications?	NO	Instruct the user to use paper that meets product specifications.
2	Is the paper curled, waved, or damp?	YES	Change the paper. Instruct the user in how to store the paper.
3	Is the Transport Guide Plate dirty?	YES	Remove foreign matter and clean the guide plate.
4	Is the Transport Roller deformed or worn?	YES	Change the Transport Roller.
5	Does the Transport Motor operate properly?	NO	Check the wiring between the Main Board and Transport Motor and, if it is intact, change the motor.
6	Does the actuator of the Upper Exit Sensor operate properly?	NO	Check the position of the Upper Exit Sensor installation and check the actuator for deformation and contamination.
7	Is the Upper Exit Sensor output signal properly applied to the Main Board?	YES	Change the Main Board.
		NO	Check the wiring between the Main Board and Upper Exit Sensor and, if it is intact, change the sensor.

2 MALFUNCTION DETECTION AND TROUBLESHOOTING PROCEDURES

2-1. Malfunction Detection (Shift Tray only)

A malfunction is detected under the following condition, causing the corresponding malfunction code to be displayed on the copier control panel.

Malfunction Code	Malfunction Detail	Detection Timing
C0B80	Shift Tray shift motion failure	(When moving from home to shift position) The Shift Home Sensor is blocked after a given period of time after the Shift Motor has been energized (at which timing the motor is deenergized). (When moving from shift to home position) The Shift Home Sensor is not blocked even after the lapse of a given period of time after the Shift Motor has been energized.

2-2. Malfunction Troubleshooting Procedures

Step	Check Item	Result	Action
1	Does the Shift Tray move in the initial operation?	YES	Check step 4.
2	Does the Shift Tray slide smoothly when the gear is turned manually with the Shift Motor removed?	NO	Check for contamination and improper installation.
3	Is an output signal being sent from the Main Board to Shift Motor?	YES	Check the wiring between the Main Board and Shift Motor and, if it is intact, change the motor.
		NO	Change the Main Board.
4	Are the Shift Home Sensor and its light blocking plate dirty?	YES	Remove foreign matter or clean.
5	Is the Shift Home Sensor output signal properly applied to the Main Board?	YES	Change the Main Board.
		NO	Check the wiring between the Main Board and Shift Home Sensor and, if it is intact, change the sensor.