FrameMaker Ver.5.5(PC) PF-106 OPTION FOR Di350
98.09.02

PF-106

SERVICE MANUAL

MINOLTA

14413

CONTENTS

GENERAL, MECHANICAL/ELECTRICAL

1. SPECIFICATIONS M-1
2. PART IDENTIFICATION M-2
3. CROSS-SECTIONAL VIEW M-3
4. DRIVE SYSTEM M-4
5. ELECTRICAL COMPONENTS LAYOUT M-5
6. MECHANICAL OPERATIONS M-6
   - 6-1. Vertical Transport Drive Mechanism M-6
   - 6-2. Paper Take-Up Mechanism M-7
   - 6-3. Paper Take-Up Retry Control M-13
   - 6-4. Paper Separating Mechanism M-13
   - 6-5. Paper Pressure Releasing Mechanism M-14
   - 6-6. Paper Take-Up Roll Retracting Mechanism M-14
   - 6-7. Edge Guides and Trailing Edge Stop M-15
   - 6-8. Paper Size Setting M-15
   - 6-9. LCC-in-Position Detection M-16
   - 6-10.Lifting Mechanism M-16
   - 6-11.Paper Near Empty Detection M-19
   - 6-12.Paper Empty Detection M-19
   - 6-13.Paper Dehumidifying Heaters (Option) M-20

DIS/REASSEMBLY, ADJUSTMENT

1. DISASSEMBLY D-1
   - 1-1. Removal of Exterior Parts D-1
   - 1-2. Removal of the Paper Take-Up Unit D-2
   - 1-3. Removal of the Paper Take-Up Rolls D-3
   - 1-4. Removal of the Feed Roll, Separator Roll and Torque Limiter Assy. D-5
   - 1-5. Cleaning of the Paper Take-Up Roll D-5
   - 1-6. Cleaning of the Feed Roll and Separator Roll D-5
   - 1-7. Cleaning of the Vertical Transport Roller/Rolls D-6
   - 1-8. Cleaning of the Roll with a Torque Limiter D-6
2. ADJUSTMENT D-7
   - 2-1. CD Registration Adjustment (Printer) D-7

MISFEED/MALFUNCTION DETECTION

1. MISFEED DETECTION T-1
   - 1-1. Misfeed Detecting Sensor Layout T-1
   - 1-2. Types of Misfeed and Misfeed Detection Timings T-2
2. MALFUNCTION DETECTION T-3

GENERAL, MECHANICAL/ELECTRICAL

1 SPECIFICATIONS

Type	:	Front Loading Type LCC
Type of Paper	:	Plain paper (60 to 90 g/m² or 16 to 24 lbs.), recycled paper (60 to 90 g/m² or 16 to 24 lbs.)
Paper Size	:	A4C, B5C, Letter C (L: Lengthwise; C: Crosswise)
Registration	:	Center
Paper Capacity	:	2500 sheets (1250 × 2)
Power Requirements	:	DC24V ±10%, DC5V ±10% (supplied from copier)
Power Consumption	:	45W (If Paper Dehumidifying Heaters are installed, Total: 75W.)
Dimensions	:	535 (W) × 544.7 (D) × 284 (H) or 21” (W) × 21-1/2” (D) × 11-1/4” (H)
Weight	:	16.7 kg or 36-3/4 lbs.
Environmental Requirements	:	Same as copier

2 PART IDENTIFICATION

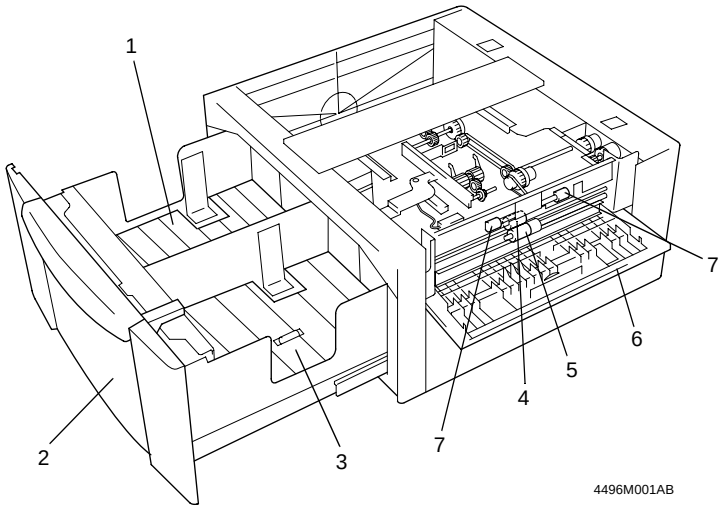

1. Lift 2
2. Front Cover
3. Lift 1
4. Feed Roll
5. Separator Roll
6. Side Cover
7. Vertical Transport Rolls

3 CROSS-SECTIONAL VIEW

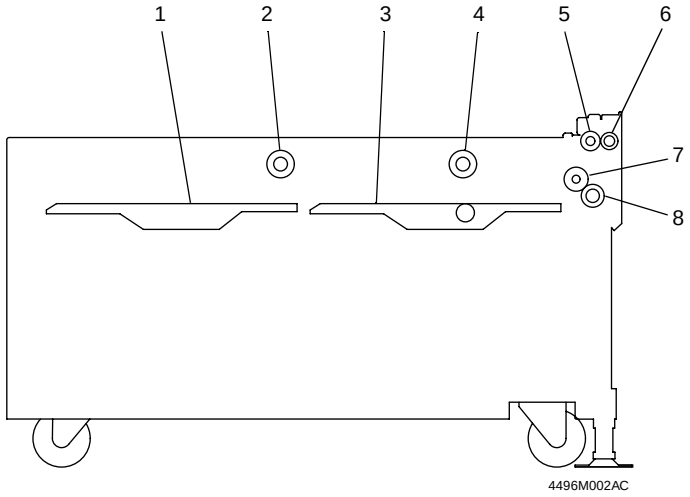

1. Lift 2
2. Paper Take-Up Roll 2
3. Lift 1
4. Paper Take-Up Roll 1
5. Vertical Transport Roller
6. Vertical Transport Roll
7. Feed Roll
8. Separator Roll

4 DRIVE SYSTEM

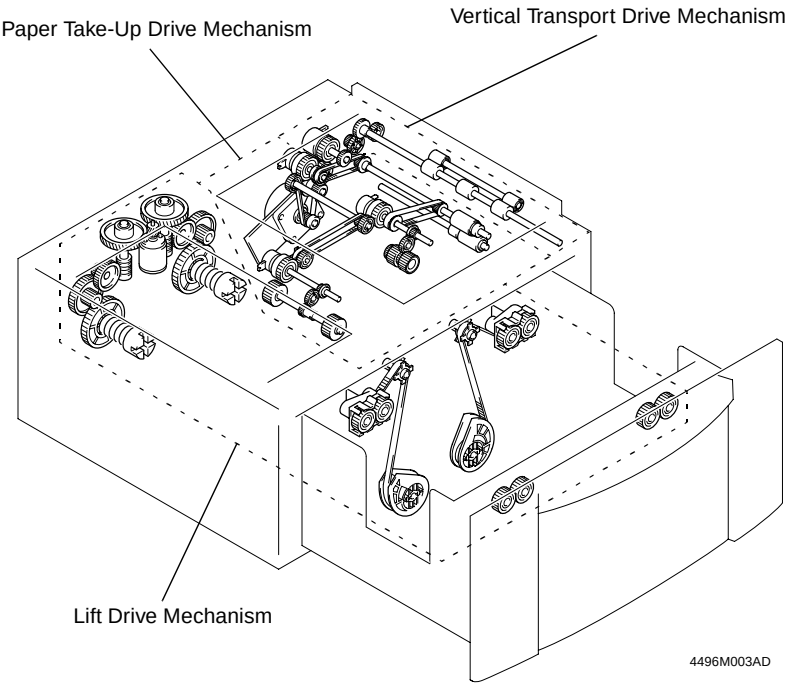

5 ELECTRICAL COMPONENTS LAYOUT

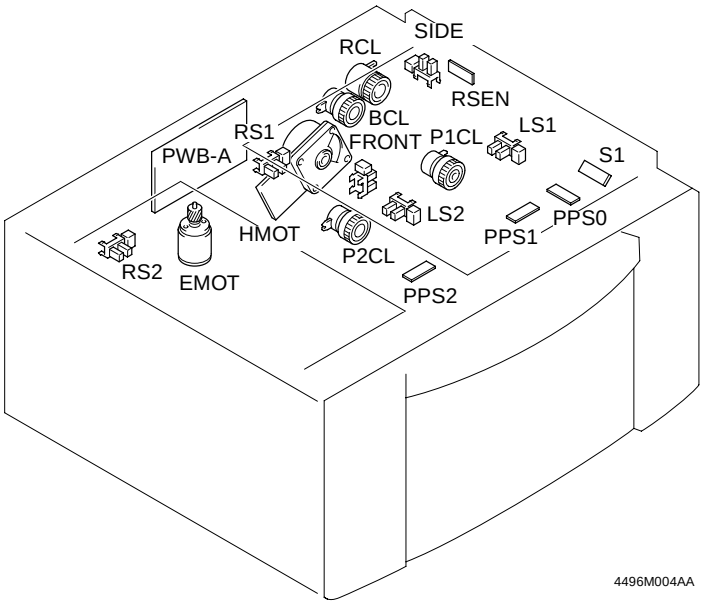

Symbol	Name	Symbol	Name
PWB-A	LCC Main Board	PPS2	Paper Empty Sensor 2
HMOT	LCC Transport Motor	RSEN	Registration Sensor
EMOT	LCC Lift-Up Motor	S1	Paper Standby Position Sensor
P1CL	Take-Up Clutch 1	SIDE	Side Cover Set Sensor
P2CL	Take-Up Clutch 2	FRONT	LCC Set Sensor
BCL	Separator Clutch	RS1	Paper Near Empty Sensor 1
RCL	Registration Clutch	RS2	Paper Near Empty Sensor 2
PPS0	LCC Take-Up Sensor	LS1	Lift-Up Sensor 1
PPS1	Paper Empty Sensor 1	LS2	Lift-Up Sensor 2

6 MECHANICAL OPERATIONS

6-1. Vertical Transport Drive Mechanism

1. Vertical Transport Drive Operation

- The Vertical Transport Roller is driven by LCC Transport Motor HMOT.
- The driving force of HMOT is transmitted via a gear train and Registration Clutch RCL to the Vertical Transport Roller which feeds the paper from Lift 1 or 2 to the copier.
- Because of the long paper path from Lift 2 involved, skew tends to occur in the paper fed from Lift 2. Registration Clutch RCL forms a loop in the paper between the Separator Roll and Vertical Transport Roller, thereby correcting the skew.

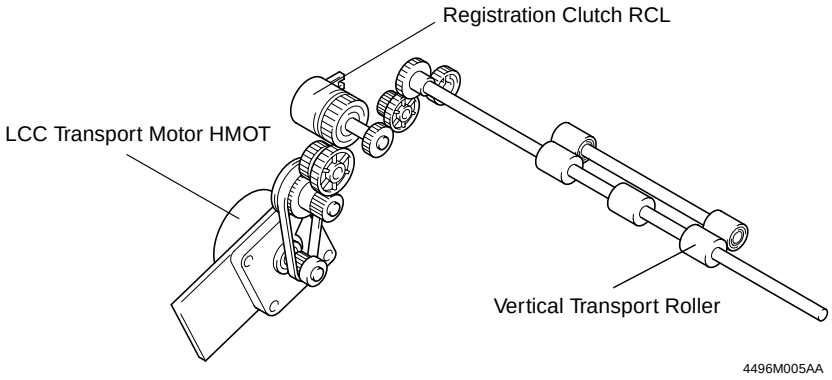

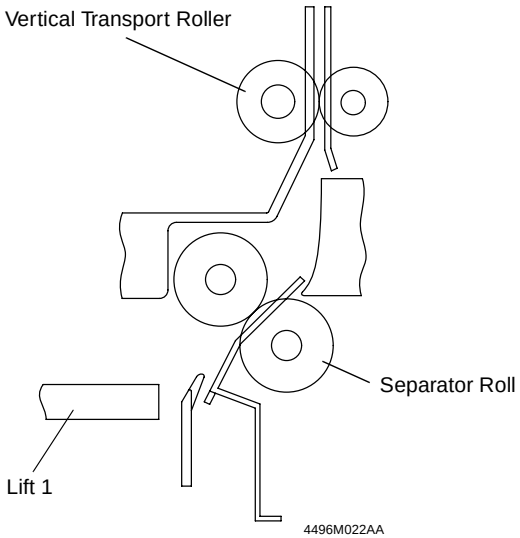

2. Control of LCC Transport Motor HMOT
A DC motor is used as HMOT which is energized and deenergized by the output signals fed through pins 7 to 10 and 12 of CN6 by way of LCC Main Board PWB-A by the Master Board of the copier.

6-2. Paper Take-Up Mechanism

- The paper take-up mechanism takes up a sheet of paper from the paper stack on each lift and feeds it to the Vertical Transport Roller.
- A paper take-up sequence is performed when drive from LCC Transport Motor HMOT is transmitted via Take-Up Clutch 1/2 P1CL/P2CL to Paper Take-Up Roll 1/2. When Lift 1 runs out of paper, paper is then fed from Lift 2.
- Mounted beneath Paper Take-Up Roll 1 of Lift 1 is a roll with a torque limiter that prevents a double feed of the last two sheets of paper.
- Paper Take-Up Roll 1 is active when paper is fed from Lift 1.
- When paper is fed from Lift 2, both Paper Take-Up Roll 1 and 2 are active to perform the paper take-up sequence. In that case, Paper Empty Sensor 1 PPS1 detects that a sheet of paper has been properly fed through Paper Take-Up Roll 1.
- The sheet of paper taken up from Lift 1/2 is temporarily stopped at the Paper Standby Position Sensor to minimize variations in the position of the leading edge of the paper. When drive is transmitted by Separator Clutch BCL to the Separator Roll, the sheet of paper is then transported to the Vertical Transport Section.

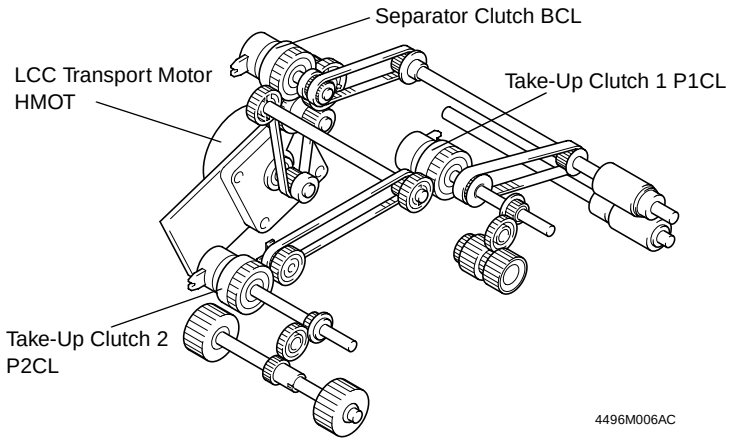

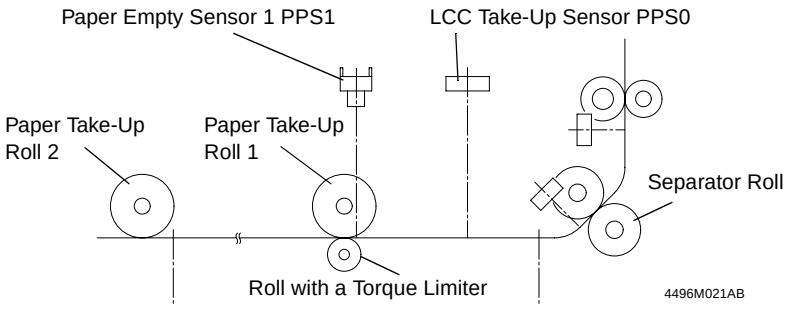

1. Paper take-up from Lift 1

A. After Lift 1 has completed its lifting motion, Paper Take-Up Roll 1 is driven to take up and feed a sheet of paper until the paper blocks Paper Standby Position Sensor S1. This serves as the standby position of the paper.

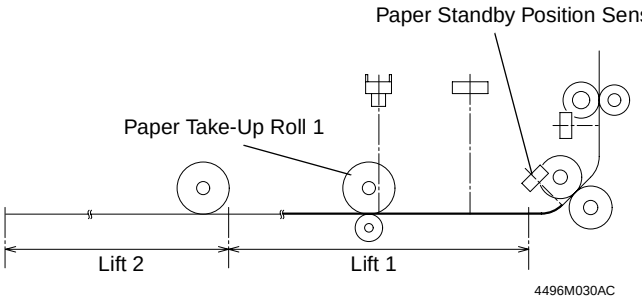

B. When a Paper Take-Up signal is received from the copier, the Separator/Feed Rolls and Paper Take-Up Roll 1 are driven to transport the paper up to Registration Sensor RSEN. After RSEN has been blocked, the paper is transported a little further to reach the Vertical Transport Roller, plus form a registration loop, before being brought to a stop.

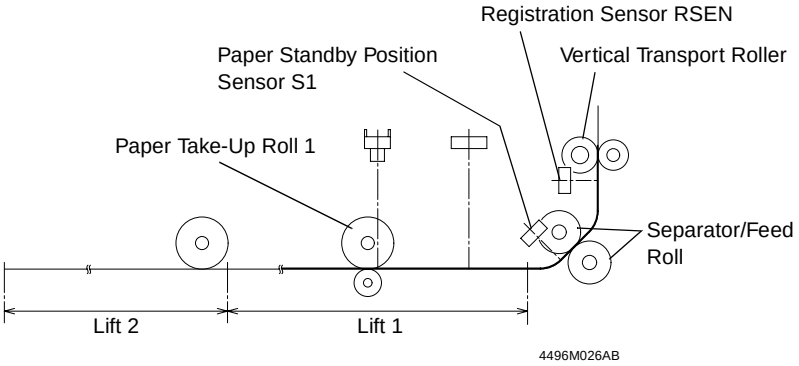

C. The Vertical Transport Roller is driven to transport the paper to the copier. When the trailing edge of the paper being transported by the Vertical Transport Roller unblocks Paper Standby Position Sensor S1, the subsequent sheet of paper is transported to the standby position and the LCC waits for the next Paper Take-Up signal to be received.
D. Registration Clutch RCL is deenergized a given period of time after the trailing edge of the paper being taken up has unblocked Registration Sensor RSEN. The next Paper Take-Up signal is transmitted after the timer, which is started as the Vertical Transport Roller starts moving for the preceding sheet of paper, has run out.

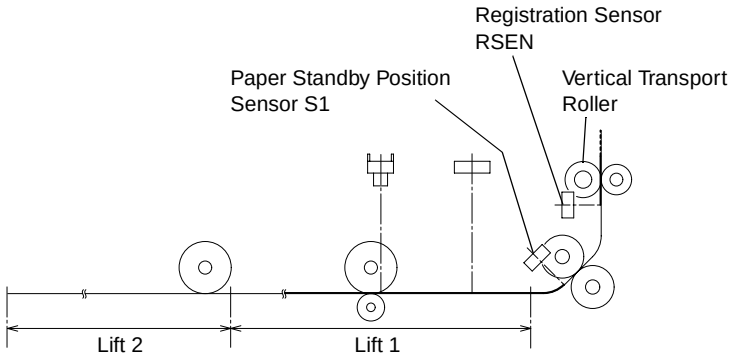

E. The steps B to D are repeated to transport paper from Lift 1.

Taking up and feeding two sheets of paper from Lift 1

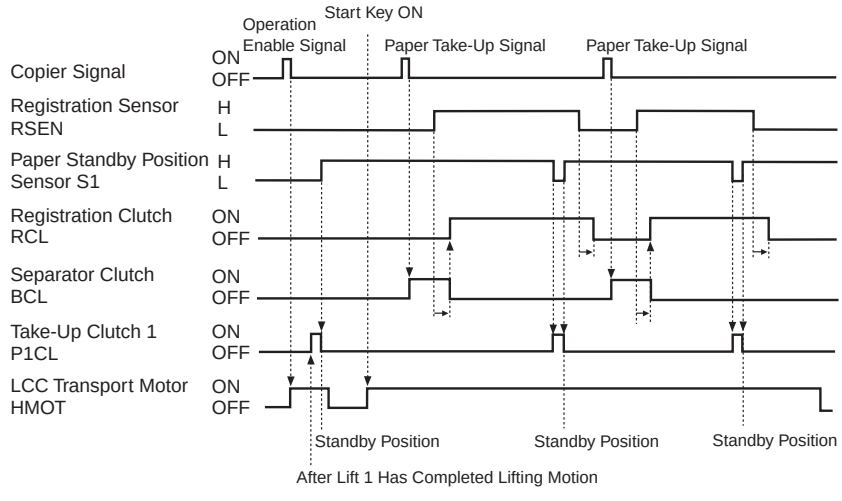

2. Paper take-up from Lift 2

A. When all sheets of paper have been taken up and fed in from Lift 1, Lift 1 is placed in the top level position to serve as part of the paper path for paper feeding from Lift 2.

B. When the trailing edge of the last sheet of paper from Lift 1 unblocks Paper Empty Sensor 1 PPS1, both Paper Take-Up Roll 1 and 2 start turning.

C. The sheet of paper is transported by driving both Paper Take-Up Roll 1 and 2 up to a point at which LCC Take-Up Sensor PPS0 is blocked.

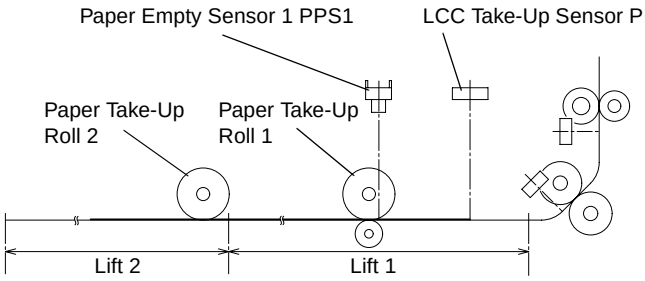

4496M028AC

D. Paper Take-Up Roll 1 is driven to transport the paper located at PPS0 up to a point at which Paper Standby Position Sensor S1 is blocked. This serves as the standby position of the paper.

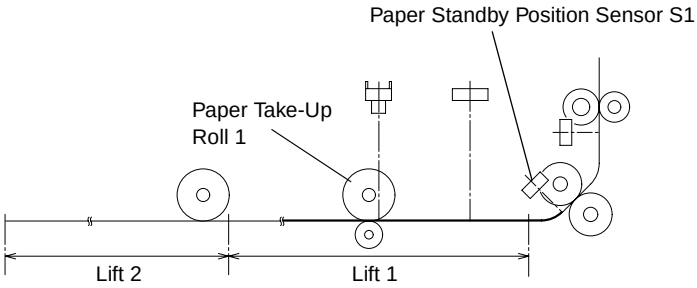

4496M030AC

E. When a Paper Take-Up signal is received from the copier, the Separator/Feed Rolls and Paper Take-Up Roll 1 are driven to transport the paper up to Registration Sensor RSEN. After RSEN has been blocked, the paper is transported a little further to reach the Vertical Transport Roller, plus form a registration loop, before being brought to a stop.

F. The Vertical Transport Roller is driven to transport the paper to the copier. When the trailing edge of the paper being transported by the Vertical Transport Roller unblocks Paper Empty Sensor 1 PPS1, Paper Take-Up Roll 1 and 2 are driven to transport the subsequent sheet of paper to a position at which PPS1 is blocked.

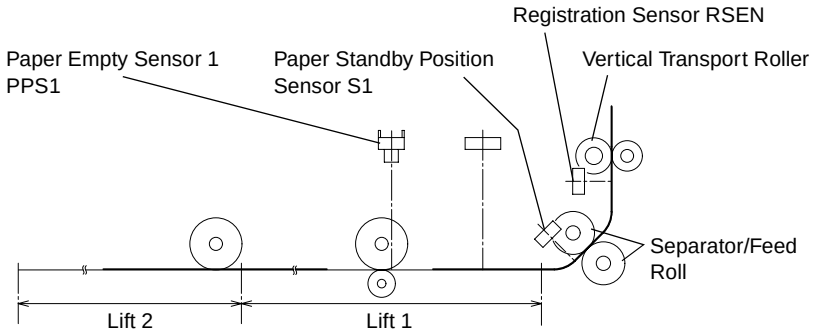

4496M029AC

G. A given period of time after the trailing edge of the preceding sheet of paper has unblocked LCC Take-Up Sensor PPS0, the subsequent sheet of paper located at PPS1 is transported to the standby position. LCC then waits for the next Paper Take-Up signal to be received.

If no paper is present at the point at which the trailing edge of the preceding sheet of paper is supposed to block S1 when the subsequent sheet of paper blocks PPS1, the subsequent sheet of paper is transported to the standby position without being stopped and the LCC waits for the next Paper Take-Up signal.

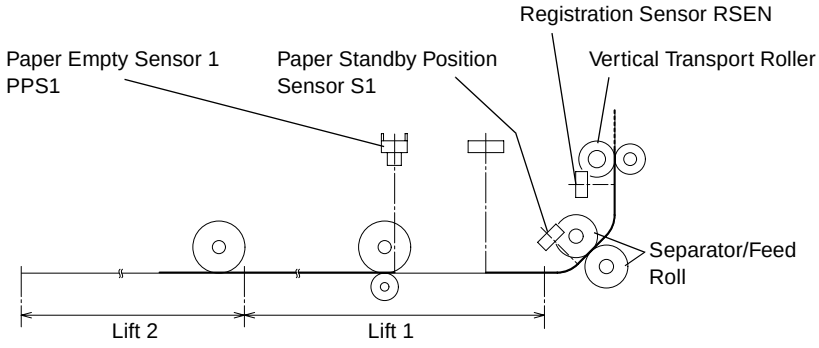

4496M025AC

H. Registration Clutch RCL is deenergized a given period of time after the trailing edge of the paper being taken up has unblocked Registration Sensor RSEN. The next Paper Take-Up signal is transmitted after the timer, which is started as the Vertical Transport Roller starts moving for the preceding sheet of paper, has run out.
I. The steps E to H are repeated to transport paper from Lift 2.

Taking up and feeding two sheets of paper from Lift 2

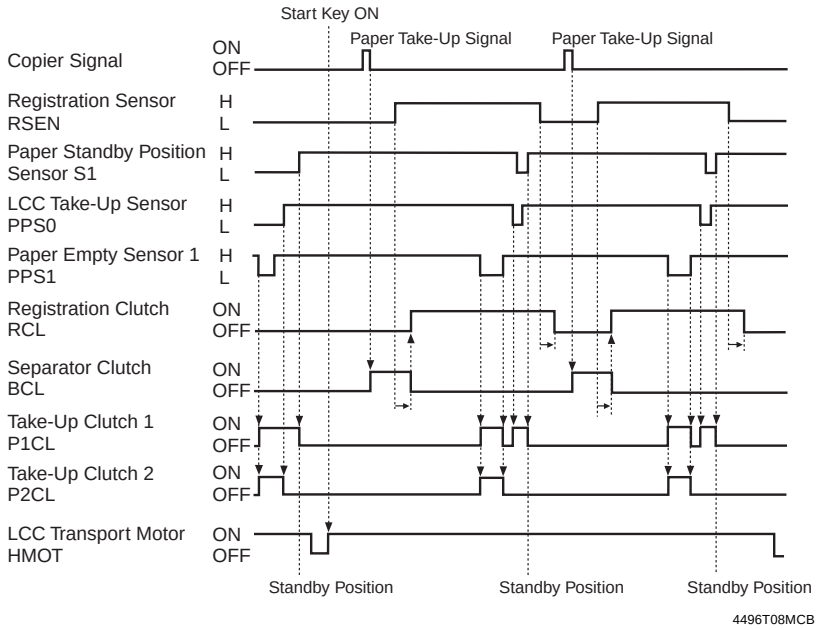

6-3. Paper Take-Up Retry Control

To minimize the occurrence of paper misfeed due to a slippery Paper Take-Up Roll, Separator Clutch BCL is energized a second time if a sheet of paper fails to reach Registration Sensor RSEN within a given period of time after BCL has first been energized.
The control timing is as follows.

A paper misfeed results if the sheet of paper does not reach the Registration Sensor even after three paper take-up sequences.

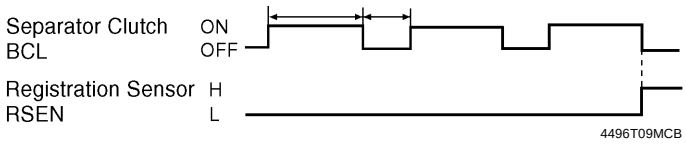

6-4. Paper Separating Mechanism

The paper separating mechanism employs a system with a torque limiter that is fitted to the Separator Roll shaft and stops the Separator Roll when there is a change in friction between the Feed and Separator Rolls.

<Normal Feeding>

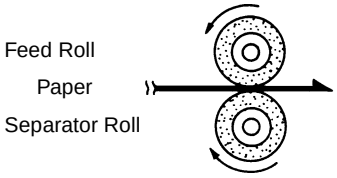

Driven or stationary

When only one sheet of paper is fed, the friction coefficient on the top side of the paper is equal to that on the underside. Driven by the Feed Roll, the paper drives the Separator Roll. This causes the paper to be sent to the Vertical Transport Section.
The friction coefficient varies for different ambient conditions and types of paper being used, which often causes the Separator Roll to be stationary.

<Double Feeding>

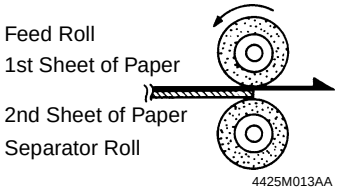

Stationary

Since the friction coefficient between the underside of the second sheet of paper and Separator Roll is greater than that between the first and second sheets of paper, the Separator Roll is not driven and holds the second sheet of paper at the nip, allowing only the first sheet of paper to be fed to the Vertical Transport Section.

6-5. Paper Pressure Releasing Mechanism

- The LCC is provided with a mechanism that releases the pressure between the Feed and Separator Rolls and between the paper and Paper Take-Up Roll when the LCC is slid out of the copier.
- The pressure between the Feed and Separator Rolls is released by the Separator Roll Assy and the Pressure Release Rail above the rail on the paper take-up end. When LCC is pulled out, the Pressure Release Rail pushes the Separator Roll Assy downward, thus releasing the pressure between the Feed and Separator Roll.

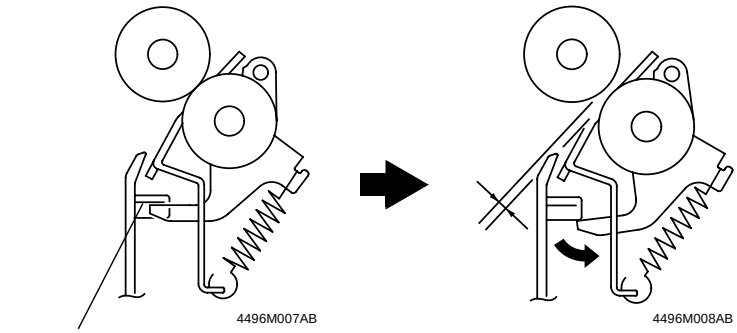

6-6. Paper Take-Up Roll Retracting Mechanism

The pressure between the paper and Paper Take-Up Roll is released by the projection on the back side of the Front Cover, Pressure Release Lever, and Paper Take-Up Roll Assy. When the LCC is slid out, it releases the Pressure Release Lever, which pushes the Paper Take-Up Roll upward to release pressure between the paper and Paper Take-Up Roll.

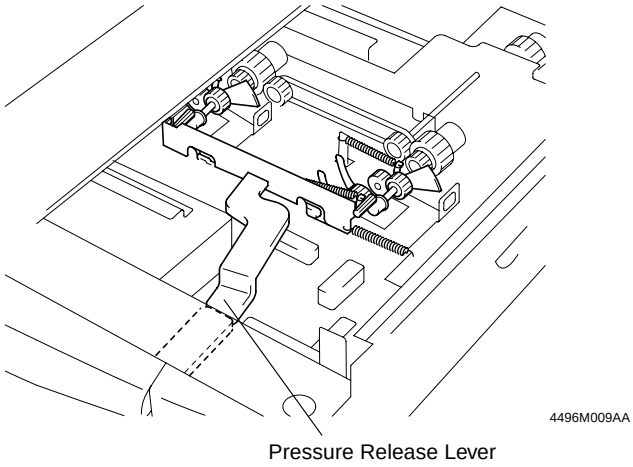

6-7. Edge Guides and Trailing Edge Stop

The Trailing Edge Stop is screwed into position (not used for Letter crosswise).
Edge Guides can be slid into any desired position.
Whenever the positions of the Edge Guides and Trailing Edge Stop have been changed, be sure to perform the paper size setting procedure. (See “Paper Size Setting” that follows.)
✻ The inch area LCC can be set for Letter crosswise only.

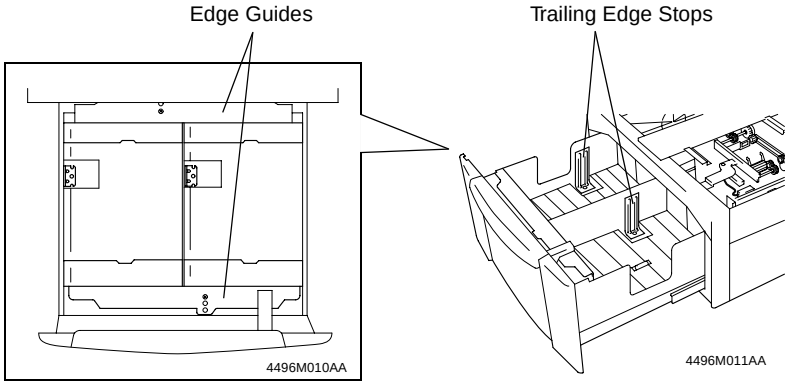

6-8. Paper Size Setting

The paper sizes that can be set are A4 crosswise, B5 crosswise, and Letter crosswise.
After the positions of the Edge Guides and Trailing Edge Stop have been changed, place the DIP switch keys on LCC Main Board PWB-A in the corresponding positions according to the current paper size.

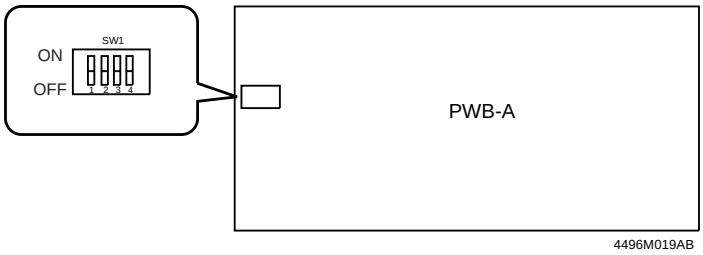

SW1	Letter Crosswise	A4 Crosswise	B5 Crosswise
1	OFF	ON	OFF
2	OFF	OFF	ON
3	OFF	OFF	OFF
4	OFF	OFF	OFF

6-9. LCC-in-Position Detection

The LCC is detected at its closed position when the light blocking plate provided on the rear end of the right rail blocks LCC Set Sensor FRONT.

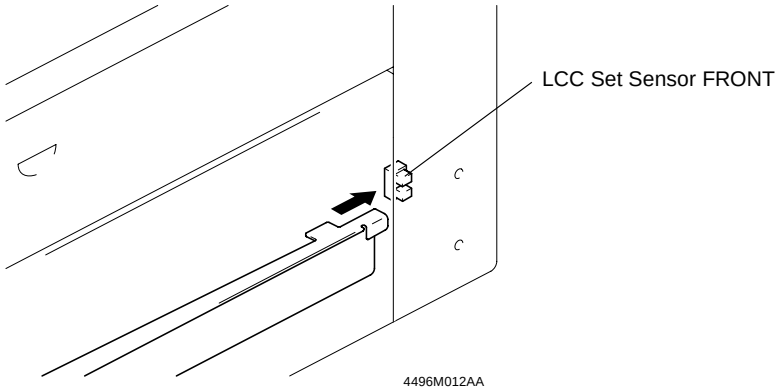

6-10. Lifting Mechanism

When the LCC is slid into the copier, the couplings are engaged. When LCC Lift-Up Motor EMOT turns forward and backward, its drive is transmitted via a one-way gear and gear train to raise Lift 1 and Lift 2, in that order.
A one-way gear is in each of the Lift 1 and 2 drive mechanisms. When EMOT turns forward, its drive is transmitted to Lift 1 and when the motor turns backward, its drive is transmitted to Lift 2.

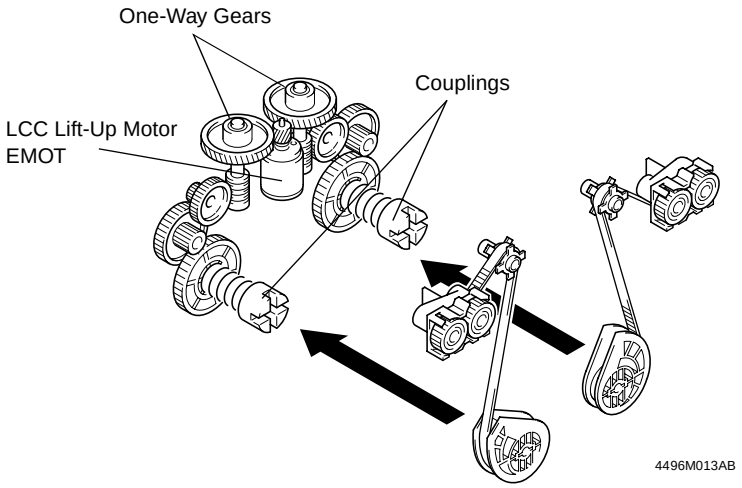

When LCC is Slid in:

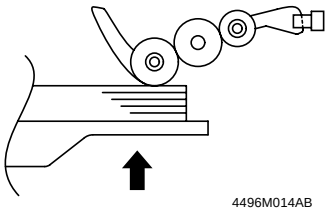

4496M014AB

LCC Set Sensor FRONT is blocked.

↓

LCC Lift-Up Motor EMOT turns forward to raise Lift 1.

↓

The paper stack causes the light blocking plate of the Paper Take-Up Roll 1 Assy to block Lift-Up Sensor 1 LS1.

↓

EMOT is deenergized and then energized to start turning backward, thereby raising Lift 2.

↓

The paper stack causes the light blocking plate of the Paper Take-Up Roll 2 Assy to block Lift-Up Sensor 2 LS2.

↓

EMOT is deenergized.

During a Copy Cycle:

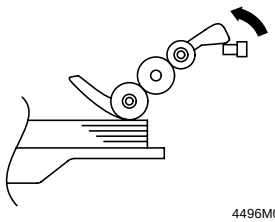

4496M015AB

↓

Paper is consumed as copy cycles are run.

↓

The Paper Take-Up Roll gradually lowers, unblocking the Lift-Up Sensor.

↓

EMOT is energized and the Lift is raised. This lifts the paper stack to block the Lift-Up Sensor.

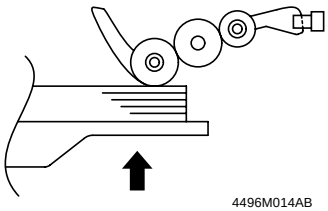

4496M014AB

Both Lift 1 and 2 perform these sequences of operations to keep a given pressure between the paper and Paper Take-Up Roll.

1. Lift 1 and 2 Ascent Conditions

- The LCC is slid into position.
- The Lift-Up Sensor is unblocked while a paper take-up sequence is being carried out with paper present on the Lift.

2. Lift 1 and 2 Stop Conditions

- The Lift-Up Sensor is blocked.
- The Lift-Up Sensor is blocked while the paper stack top level position is being corrected.

When LCC is Slid in:

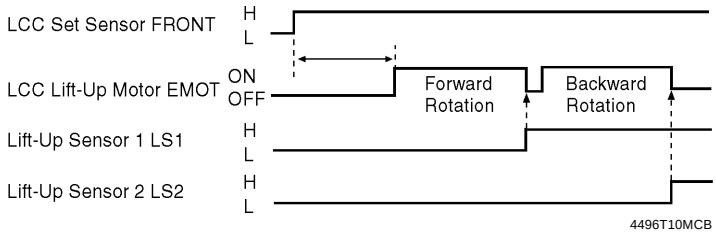

3. LCC Lift-Up Motor EMOT Control

LCC Lift-Up Motor EMOT is a DC motor. It is energized or deenergized and its direction of rotation is determined by the Motor Control signals applied from the copier's Master Board to pins 1 and 2 of CN5 of LCC Main Board PWB-A.

EMOT	Lift 1	Lift 2	CN5	
			1	2
Energized (Forward Rotation)	Ascent	Stop	H	L
Energized (Backward Rotation)	Stop	Ascent	L	H
Deenergized	Stop	Stop	L	L

4. Descent Motion

When the LCC is slid out of the copier, Lift 1 and 2 are lowered. To absorb shocks that would otherwise be applied during the descent motion, springs are loaded in the rear side of the LCC.

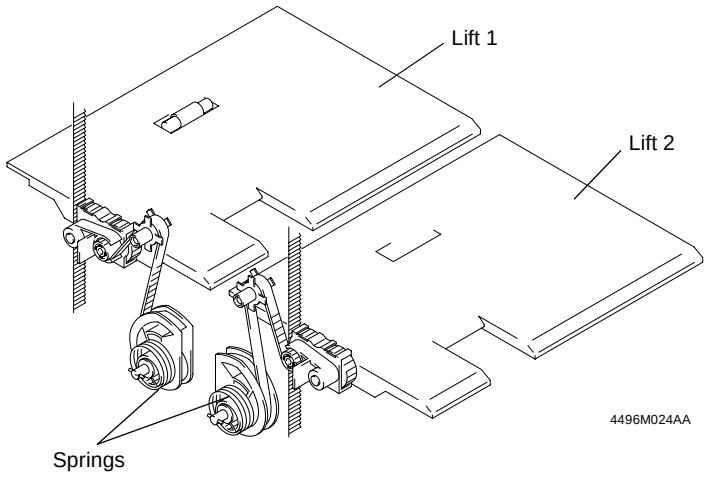

6-11. Paper Near Empty Detection

A paper-near-empty condition is detected by sensing the height of Lift 1 or Lift 2. When paper is consumed during a copy cycle, Lift 1 or 2 gradually moves up. This eventually blocks the Paper Near Empty Sensor, at which timing the copier determines that the LCC will soon run out of paper (the amount of paper (80 g/m^2) still available for use is 100 ±50 sheets) and gives a corresponding message on the Touch Panel.
Since the amount of paper still available for use varies while a paper take-up sequence is in progress, detection is made at a timing when the Paper Take-Up Roll is in the retracted position.

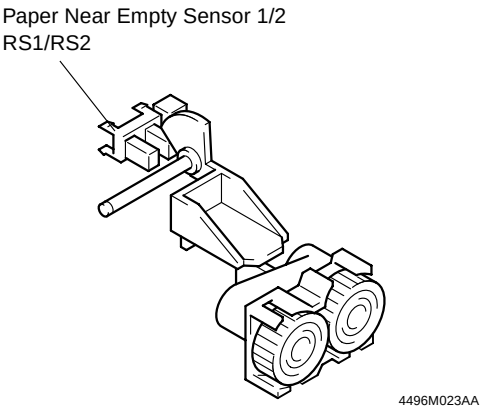

6-12. Paper Empty Detection

A paper-empty condition is detected by a reflector type photosensor, Paper Empty Sensor 1 PPS1 and Paper Empty Sensor 2 PPS2, installed in the Paper Take-Up Unit. When a paper-empty condition is detected, the corresponding message is displayed on the Touch Panel.

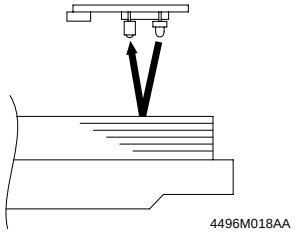

- When Paper is Loaded

The light from the LED of Paper Empty Sensor 1 PPS1 or Paper Empty Sensor 2 PPS2 is reflected, with which the copier determines that there is paper in LCC.

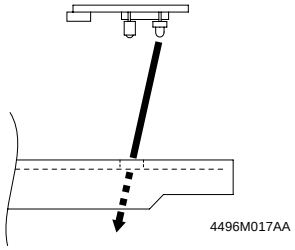

- When No Paper is Loaded

The light from the LED of Paper Empty Sensor 1 PPS1 or Paper Empty Sensor 2 PPS2 is not reflected, with which the copier determines that there is no paper loaded in the LCC.

Panel Display

		Lift 1	
		Paper-near-empty	Paper-empty
Lift 2	Paper-near-empty	❍	❍
	Paper-empty	❍	◎

❍: Paper-near-empty display ◎: Paper-empty display

6-13. Paper Dehumidifying Heaters (Option)

To prevent paper passage performance from being degraded by damp paper under highly humid conditions, Paper Dehumidifier Heaters are mounted on both sides of the LCC. As long as the power cord is plugged in, these heaters are kept ON at all times.

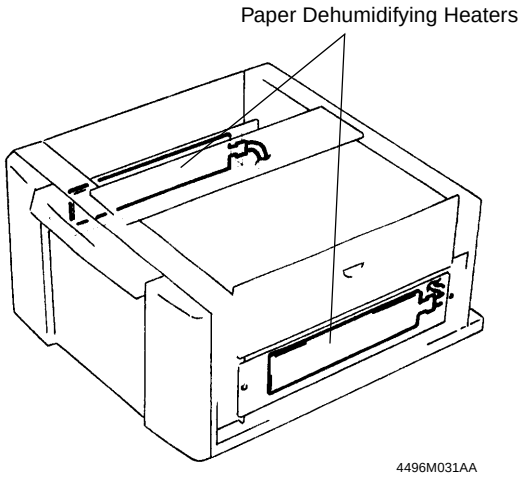

DIS/REASSEMBLY, ADJUSTMENT

1 DISASSEMBLY

1-1. Removal of Exterior Parts

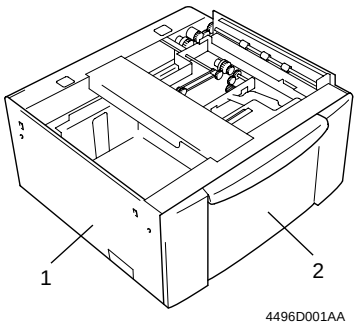

4496D001AA

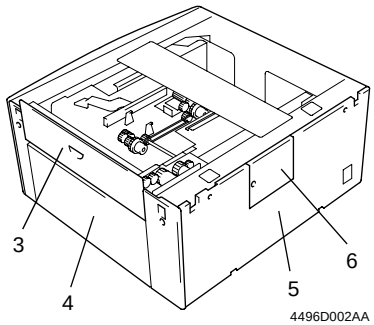

4496D002AA

No.	Part Name	Removal Steps
1	Left Cover	Remove two screws.
2	Front Cover	Slide out the LCC and remove three screws.
3	Side Panel	Open the Side Panel.
4	Right Cover	Remove two screws.
5	Rear Cover	After the Maintenance Panel has been removed, remove four screws.
6	Maintenance Panel	Remove one screw.

1-2. Removal of the Paper Take-Up Unit

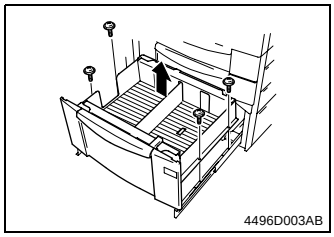

1. Remove the LCC.

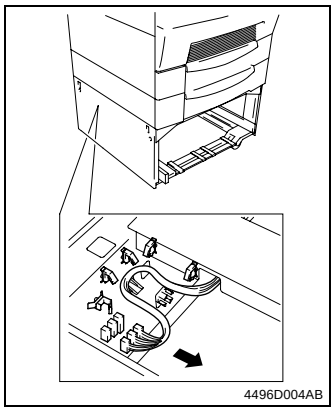

2. Unplug three connectors and remove the harness from five cord clamps.

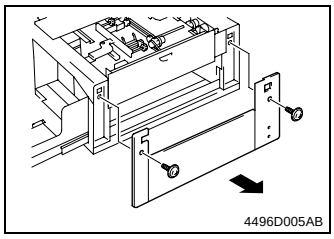

3. Remove two screws and the Right Cover.

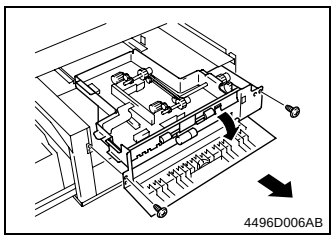

4. Open the Side Panel.
5. Remove two screws and the Paper Take-Up Unit.

1-3. Removal of the Paper Take-Up Rolls

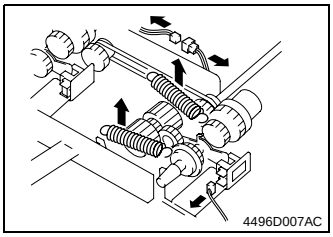

1. Remove the Paper Take-Up Unit.
2. Unplug one connector of Lift-Up Sensor 1 and another of Take-Up Clutch 1 of the right Paper Take-Up Roll Assy.
3. Unhook two springs.

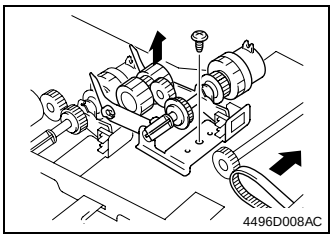

4. Remove one screw and, while removing the timing belt toward the clutch side, remove the right Paper Take-Up Roll Assy.

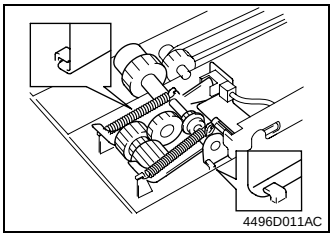

When mounting the right Paper Take-Up Roll Assy, fit the ends of the assy into position as shown.

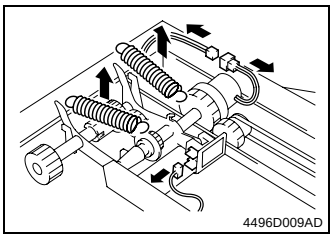

5. Unplug one connector of Lift-Up Sensor 2 and another of Take-Up Clutch 2 of the left Paper Take-Up Roll Assy.
6. Unhook two springs.

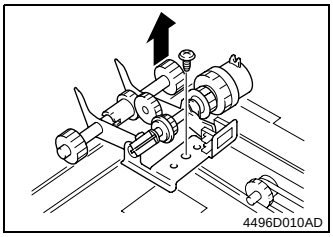

7. Remove one screw and the left Paper Take-Up Roll Assy.

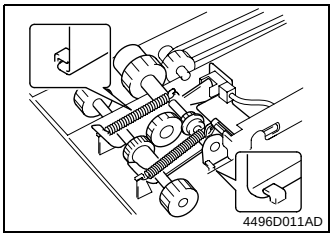

When mounting the left Paper Take-Up Roll Assy, fit the ends of the assy into position as shown.

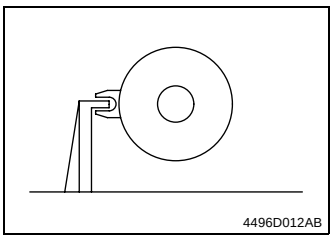

When mounting the Paper Take-Up Roll Assys, fit the Take-Up Clutch into position as shown.

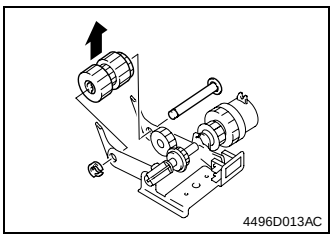

8. Snap off one C-clip from the Paper Take-Up Roll 1 shaft.
9. Take the shaft and Paper Take-Up Roll 1 apart.

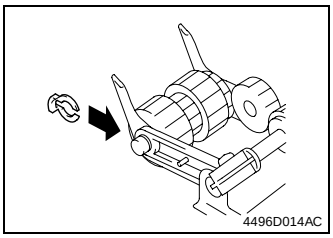

When mounting Paper Take-Up Roll 1, face the C-clip as shown.

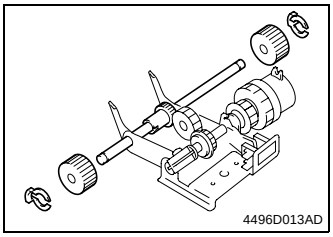

10. Snap off two C-clips and take off Paper Take-Up Roll 2.

1-4. Removal of the Feed Roll, Separator Roll and Torque Limiter Assy.

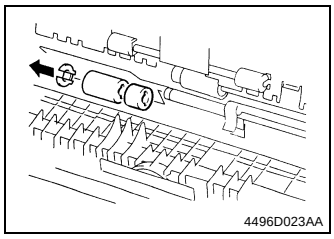

1. Open the Side Cover.
2. Snap off one C-clip from the Separator Roll shaft and remove the Separator Roll and Torque Limiter Assy.

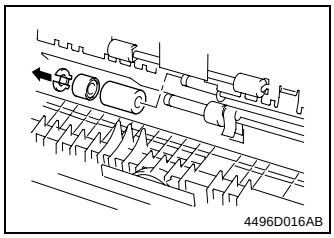

3. Snap off one C-clip from the Feed Roll shaft and remove the Feed Roll.

1-5. Cleaning of the Paper Take-Up Roll

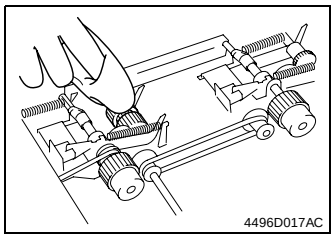

1. Remove the Paper Take-Up Unit.
2. Wipe the surface of Paper Take-Up Roll 1 & 2 clean with a soft cloth dampened with alcohol.

1-6. Cleaning of the Feed Roll and Separator Roll

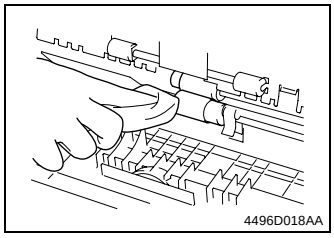

1. Open the Side Panel.
2. Wipe the surface of the Feed/Separator Roll clean with a soft cloth dampened with alcohol.

1-7. Cleaning of the Vertical Transport Roller/Rolls

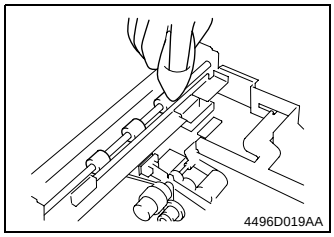

1. Remove the Paper Take-Up Unit.
2. Wipe the surface of the Vertical Transport Roller/Rolls clean with a soft cloth dampened with alcohol.

1-8. Cleaning of the Roll with a Torque Limiter

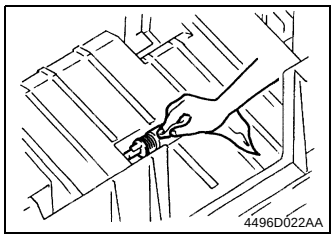

1. Slide out the LCC.
2. Wipe the surface of the Roll with a Torque Limiter clean with a soft cloth dampened with alcohol.

2 ADJUSTMENT

2-1. CD Registration Adjustment (Printer)

Requirement:

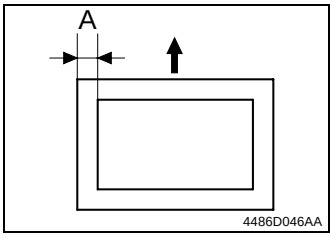

Dimension A on the output test print should meet the following specifications.

Specifications	Adjustment Mode	Setting Range
A4C 10.0 ±2.0 mm Letter C 10.0 ±2.0 mm	Registration CD	-4 to +4

NOTE:
This adjustment should be made whenever the PH has been replaced with a new one.

For the adjustment procedures, see ADJUSTMENT in the SERVICE MANUAL for the copier.

MISFEED/MALFUNCTION DETECTION

1 MISFEED DETECTION

1-1. Misfeed Detecting Sensor Layout

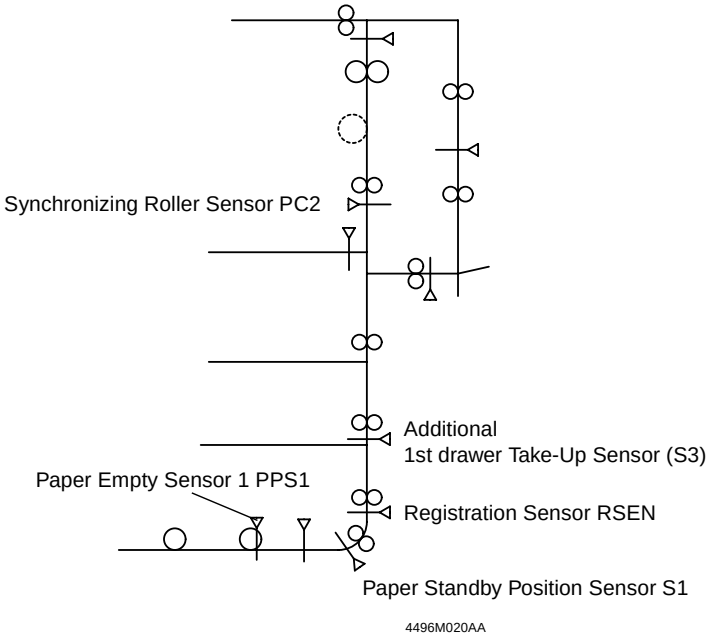

1-2. Types of Misfeed and Misfeed Detection Timings

Type	Detection Timing
Paper left	The output from Registration Sensor RSEN is blocked (H) when the copier Power Switch is turned ON or a misfeed is reset.
Lift 1 paper take-up failure detection	Paper Standby Position Sensor S1 is not blocked (H) within a given period of time after Take-Up Clutch 1 P1CL has been energized.
Lift 2 paper take-up failure detection	Paper Empty Sensor 1 PPS1 is not blocked (H) within a given period of time after Take-Up Clutch 2 P2CL has been energized.
	S1 is not blocked (H) within a given period of time after P1CL has been energized.
Registration Sensor paper leading edge detection	RSEN is not blocked (H) within a given period of time after Separator Clutch BCL has been energized (after two paper take-up retry sequences).
Registration Sensor paper trailing edge detection	RSEN is not unblocked (L) within a given period of time after Registration Clutch RCL has been energized.
Vertical transport paper leading edge detection	• LCC only: Synchronizing Roller Sensor PC2 is not unblocked (H) within a given period of time after Registration Clutch RCL has been turned ON.
	• Additional 1st drawer + LCC: Take-Up Sensor S3 of the additional 1st drawer is not blocked (H) within a given period of time after Registration Clutch RCL has been turned ON.
Size error detection ✻ The detection described on the right is also made during a 2-sided copy cycle.	• LCC only: The period of time is counted from when Synchronizing Roller Clutch CL1 is energized to when Synchronizing Roller Sensor PC2 is blocked (L). The difference between the detected length and the paper size which has been recognized is more than ±20 mm. • Additional 1st drawer + LCC: The period of time is counted from when Take-Up Sensor S3 of the additional 1st drawer is blocked (L) to when it is unblocked (H). The difference between the detected length and the paper size which has been recognized is more than ±20 mm.

2 MALFUNCTION DETECTION

Malfunction Code	Description	Detection Timing
C0990	LCC Lift-Up Motor EMOT failure to turn	The overcurrent detection circuit detects an overcurrent condition that lasts for a given period of time while EMOT remains energized.
C0991	Lift 1 ascent motion failure	Lift-Up Sensor 1 LS1 is not blocked (H) within a given period of time after EMOT has been energized (Lift 1 has started moving up).
C0995	LCC Transport Motor HMOT failure to turn	The HMOT Lock signal is not input for a given period of time.
C0999	Lift 2 ascent motion failure	Lift-Up Sensor 2 LS2 is not blocked (H) within a given period of time after EMOT has been energized (Lift 2 has started moving up).
C099D	Communications error	LCC becomes uncontrollable due to an error in communications between the LCC and copier.