CONNECTORS LAYOUT

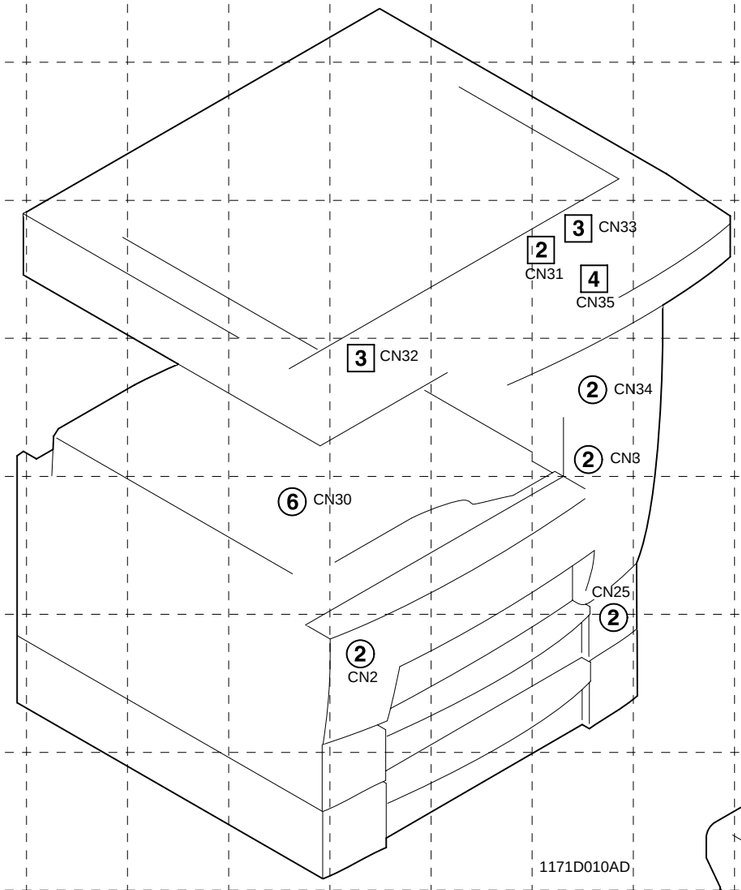

1171D010AD

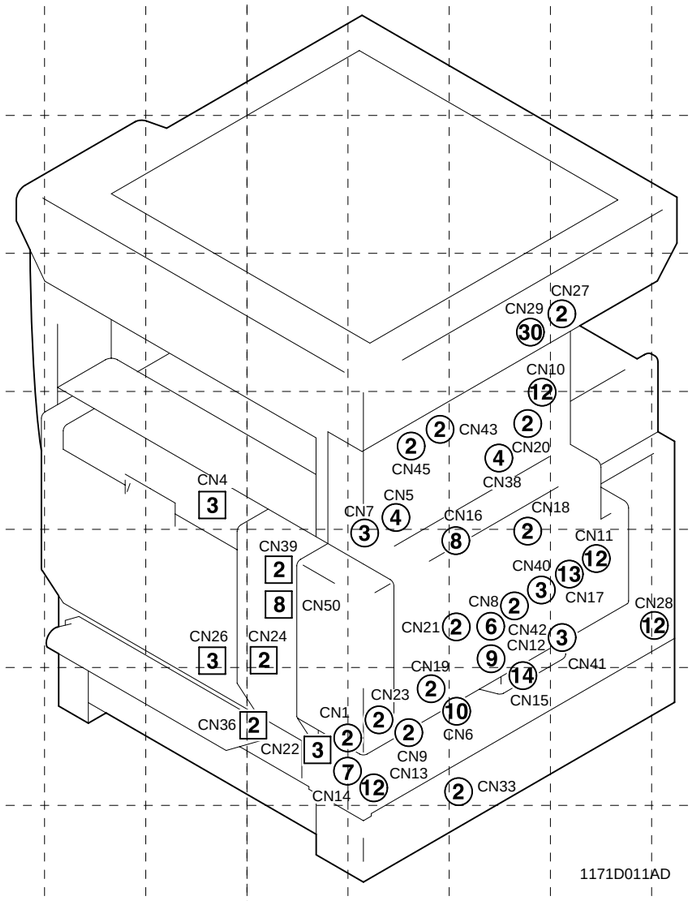

1171D011AD

Description

Number of Pin → ① Possible to confirm by removing external cover.

↘ 1 Not possible to confirm by removing external cover.

CN No.		LOCATION	GRID
CN2	2P	24-E	5-F
CN3	2P	2-C	7-D
CN4	3P	5-F	10-I
CN5	4P	2-A	12-I
CN6	10P	2-B	13-K
CN7	3P	2-D	12-I~J
CN8	6P	19-G	13-J
CN9	2P	19-H	12-K
CN10	12P	27-D	13-H~I
CN11	12P	2-F~G	14-J
CN12	9P	19-F~G	13-J
CN14	7P	19-I	11~12-K
CN15	14P	21-E~F	13-K
CN16	8P	26-D	13-J
CN17	13P	2-G~H	14-J
CN18	2P	12-E	13-I~J
CN19	2P	19-H	12-K
CN20	2P	12-E	13-I
CN21	2P	5-C	13-J
CN22	3P	2-B	11-K
CN23	2P	22-H~I	12-K
CN24	2P	5-G	11-J
CN25	2P	20-G	7-E~F
CN26	3P	2-B	10-J
CN27	2P	26-D	14-H
CN28	12P	26-F	14~15-J
CN29	30P	27-E~F	13-H
CN30	6P	26-A~B	4-E
CN31	2P	13-E	7-C
CN32	3P	11-D	5-D
CN33	3P	11-D	7-C
CN34	2P	26-A	7-D
CN35	4P	26-B	7-C
CN36	2P	20-I	10~11-K
CN38	4P	26-E	13-I
CN39	2P	5-E	11-J
CN40	3P	5-F	13-J
CN41	3P	5-C	14-J
CN42	2P	5-E	14-J
CN43	2P	14-F	12-I
CN45	2P	14-E	12-I
CN50	8P	5-H	11-J
500-Sheet Cassette			
CN33	2P	21-F	13-K
Duplex Unit			
CN1	2P	24-G	11~12-K
CN13	12P	24-G	12-K