FrameMaker Ver.5.5E(PC) Di350 GENERAL, MECHANICAL/ELECTRICAL
98.12.18

Di350

GENERAL

MINOLTA

CONTENTS

1. SAFETY INFORMATION G-1
2. SPECIFICATIONS G-8
3. PRECAUTIONS FOR INSTALLATION G-10
4. PRECAUTIONS FOR USE G-11
5. HANDLING OF THE CONSUMABLES G-12
6. OTHER PRECAUTIONS G-12
7. SYSTEM OPTIONS G-13

1171SBG0100A

1 SAFETY INFORMATION

Laser Safety

This is a digital machine which prints by means of a laser. There is no possibility of danger from the laser, provided the machine is operated according to the instructions in this manual.

Since radiation emitted by the laser is completely confined within protective housing, the laser beam cannot escape from the machine during any phase of user operation.

This machine is certified as a Class 1 product. This means the machine does not produce hazardous laser radiation.

CAUTION: The use of controls, adjustments or performance of procedures other than those specified in this manual may result in hazardous radiation exposure. Because of this, Minolta strongly recommends that you operate your copy machine only as described in this documentation.

Internal Laser Radiation

Maximum Average Radiation Power: 36.7µW at laser aperture of the print head unit

Wavelength: 770-810nm

This product employs a Class IIIb Laser Diode that emits an invisible laser beam.
The Laser Diode and Scanning Polygon Mirror are incorporated in the print head unit.
The print head unit is NOT A FIELD SERVICE ITEM.
Therefore, the print head unit should not be opened under any circumstances.

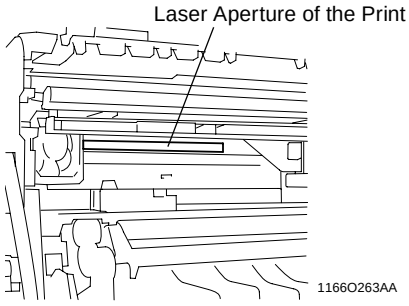

This figure shows the view inside the Right Side Door with the Imaging Unit removed.

For United States

CDRH regulation
This copier is certified as a Class 1 Laser product under the Radiation Performance Standard according to the Food, Drug and Cosmetic Act of 1990. Compliance is mandatory for Laser products marketed in the United States and is reported to the Center for Devices and Radiological Health (CDRH) of the U.S. Food and Drug Administration of the U.S. Department of Health and Human Services (DHHS). This means that the device does not produce hazardous laser radiation.

The label shown on page G-3 indicates compliance with the CDRH regulations and must be attached to laser products marketed in the United States.

CAUTION: Use of controls, adjustments or performance of procedures other than those specified in this manual may result in hazardous radiation exposure.

This is a semiconductor laser. The maximum power of the laser diode is 5mW and the wavelength is 770-810nm.

For Europe

CAUTION: Use of controls, adjustments or performance of procedures other than those specified in this manual may result in hazardous radiation exposure.

This is a semiconductor laser. The maximum power of the laser diode is 5mW and the wavelength is 770-810nm.

For Denmark

ADVARSEL
Usynlig laserstråling ved åbning, når sikkerhedsafbrydere er ude af funktion.
Undgå udsættelse for stråling.

Klasse 1 laser produkt der opfylder IEC60825 sikkerheds kravene.

For Finland

LUOKAN 1 LASERLAITE

VAROITUS
Laitteen käyttäminen muulla kuin tässä käyttöohjeessa mainitulla tavalla saattaa altistaa käyttäjän turvallisuusluokan 1 ylittävälle näkymättömälle lasersäteilylle.

VARO
Avattaessa ja suojalukitus ohitettaessa olet alttiina näkymättomälle lasersäteilylle. Älä katso säteeseen.

For Sweden

KLASS 1 LASER APPARAT

VARNING
Om apparaten används på annat sätt än i denna bruksanvisning specificerats, kan användaren utsättas för osynlig laserstrålning, som överskrider gränsen för laserklass 1.

VARNING
Osynlig laserstråining när denna del är öppnad och spärren är urkopplad. Betrakta ej stråien.

For Norway

ADVERSEL
Dersom apparatet brukes på annen måte enn spesifisert i denne bruksanvisning, kan brukeren utsettes för unsynlig laserstrålning, som overskrider grensen for laser klass 1.

Dette en halveder laser. Maksimal effekt till laserdiode er 5mW og bølgelengde er 770-810nm.

Laser Safety Label

A laser safety label is attached to the outside of the copy machine as shown below.

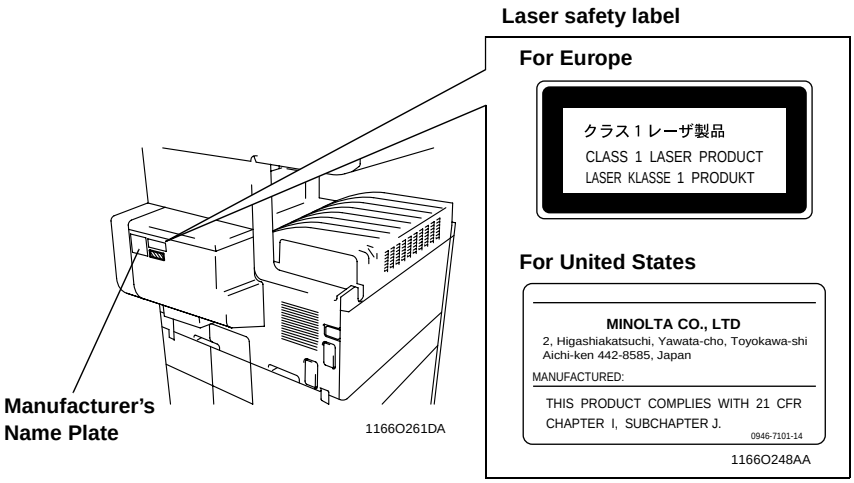

The Manufacturer's Name Plate is affixed at the position illustrated above.
Please write down the Model Name and Serial No. of your copier here.

Model:
Serial No.:

Label inside copy machine

The following laser safety label will be attached inside the copy machine as shown below.

Please read the following for your own protection.

⚠ Caution

Opening the cover indicated by the Caution label may expose you to harmful laser radiation which could cause damage or loss of eyesight. Do not open the cover when the power is on.

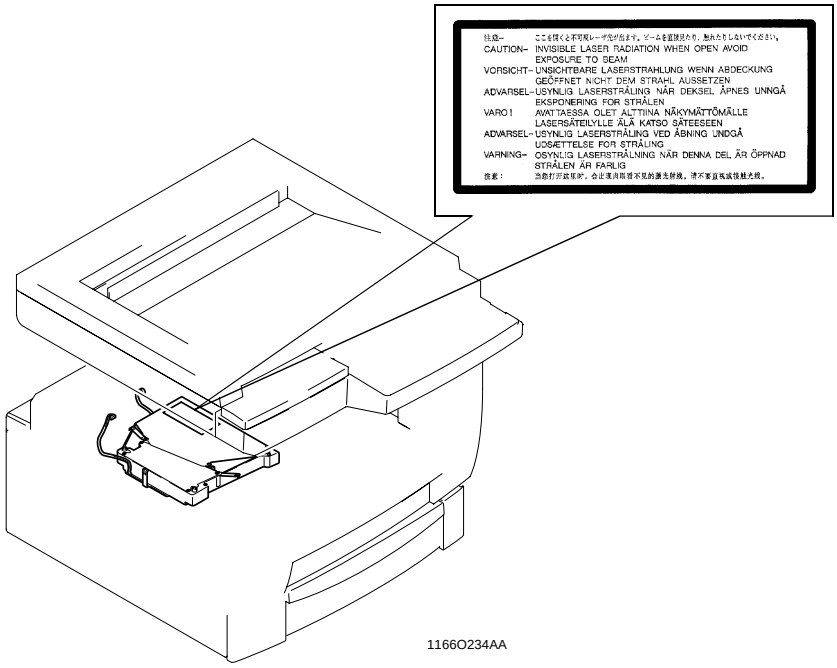

ALL Areas

CAUTION
Danger of explosion if battery is incorrectly replaced.
Replace only with the same or equivalent type
recommended by the manufacturer.
Dispose of used batteries according
to the manufacturer's instructions.

Germany only

VORSICHT!
Explosinsgefahr bei unsachgemäßen austausch der
batterie. Ersatz nur durch denselben oder einen vom hersteller
empfohlenen ähnlichen typ. Entsorgung gebrauchter batterien
nach angaben des herstellers.

Denmark only

ADVARSEL!
Lithiumbatteri - Eksplosionsfare ved fejlagtig håndtering
Udskiftning må kun ske med batteri
af samme fabrikat og type.
Levér det brugte batteri tilbage til leverandøren.

Norway only

ADVARSEL
Eksplosjonsfare ved feilaktig skifte av batteri.
Benytt samme batteritype eller en tilsvarende
type anbefalt av apparatfabrikanten.
Brukte batterier kasseres i henhold til fabrikantens
instruksjoner.

Sweden only

VARNING
Explosionsfara vid felaktigt batteribyte.
Använd samma batterityp eller en ekvivalent
typ som rekommenderas av apparattillverkaren.
Kassera använt batteri enligt fabrikantens
instruktion.

Finland only

VAROITUS
Paristo voi räjähtää, los se on virheellisesti asennettu.
Vaihda paristo ainoastaan laitevalmistajan suosittelemaan
tyyppiin. Hävitä Käytetty paristo valmistajan ohjeiden
mukaisesti.

ALL Areas

CAUTION

"Replace only with the same or equivalent type recommended by the manufacturer. Dispose of used IC Package according to the manufacturer's instructions."

Germany only

VORSICHT!

⇒"Austausch nur durch denselben oder einen vom Hersteller empfohlenen, gleichwertigen typ. Entsorgung gebrauchter Batterien nach Angaben des Herstellers.

Service Precautions

(1) Precautions

Refer to DISASSEMBLY/CLEANING for the Disassembly procedure.

1. When unplugging connectors on the P.W.B.s themselves, always make sure the power is OFF first. Be sure to unplug the copier before disassembling and cleaning.
2. Always unplug connectors by holding the connector housing. Pulling on the wires can lead to problems with poor contact.
3. It is recommended that a body ground not be used when carrying out any troubleshooting procedure. Be sure to ground DC lines to a ground test point on the P.W.B.

(2) At Replacement/Adjustment/Cleaning

1. Be sure to handle the Fusing Unit carefully. It remains hot a while after the copier is turned off.
2. Do not disassemble the Imaging Cartridge or Print Head Unit.
3. Do not expose the PC Drum of the Imaging Cartridge to direct sunlight or to room lighting for more than 5 minutes.
4. Turn off the power before removing the Print Head Unit to protect the eyes from possible exposure to the laser beam.
5. Use only a Fuse of the indicated rating.

(3) During Operation

1. Keep your hands, clothing, etc. well away from operating or rotating parts.
2. Never touch the terminals of electrical parts or high voltage parts.
3. This copier uses an invisible laser beam. To prevent a laser beam leak, the copier performs a trial run to make sure the covers are in position.

Handling the P.W.B.

Observe the following precautions when handling a P.W.B. with ICs.

(1) During Transportation/Storage

1. During transport and storage, P.W.B.s should be kept in conductive bags or on mats and not taken out unless absolutely necessary.
2. P.W.B.s should be stored in a place where direct sunlight does not strike them.
3. Do not touch IC terminals with your hands.

(2) At Replacement

1. Before removing connectors from a P.W.B., make sure the copier has been unplugged.
2. When P.W.B.s are taken out of their conductive bags or off their mats, hold them by their edges to avoid touching the terminals or the patterned surfaces.
3. Before installing connectors on a P.W.B., make sure the copier has been unplugged.

1171SBG0200A

2 SPECIFICATIONS

TYPE	:	Console/Desktop Type
PHOTOCONDUCTOR	:	Organic Photoconductor
COPYING SYSTEM	:	Electrostatic Dry Powdered Image Transfer to Plain Paper with a Laser
ORIGINAL SCANNING RESOLUTION	:	600 dpi
PAPER FEEDING SYSTEM	:	3-way system Manual Feed Tray: Single sheet feeding Multi-Purpose (MP) Cassette: Plain paper: Approx. 250 sheets Special paper: Approx. 20 sheets 500-Sheet Cassette: Approx. 500 sheets
EXPOSURE SYSTEM	:	Mirror Scanning, Slit Exposure
DEVELOPING SYSTEM	:	MT-HG System
CHARGING SYSTEM	:	Comb Electrode (1) DC Negative Corona with Scorotron System
IMAGE TRANSFER	:	Roller Image Transfer
PAPER SEPARATING SYSTEM	:	Paper Separator Fingers and Charge Neutralizing Plate
FUSING SYSTEM	:	Heat Roller
PAPER DISCHARGING SYSTEM	:	Charge Neutralizing Brush
MAXIMUM ORIGINAL SIZE	:	A3L, 11" × 17"L

COPY MEDIUM

Paper Source		MP Cassette	Manual Feed Tray
Medium	Plain paper (60 to 90 g/m^2)	❍	❍
	Transparencies	❍	❍
	Thick paper (91 to 157 g/m^2)	❍	❍
	Postcards (190 g/m^2)	❍	❍
	Recycled paper	❍	❍
Dimensions	Maximum (Width × Length)	297 × 432 mm	297 × 432 mm
	Minimum (Width × Length)	90 × 140 mm	90 × 140 mm

m: Permissible –: Not permissible

MULTIPLE COPIES	:	1 to 999
WARMING-UP TIME	:	70 sec. or less with room temperature of 23°C and rated power voltage
FIRST COPY TIME	:	4.7 sec. (A4C, MP Cassette, full size mode) 4.7 sec. (8-1/2" × 11"C, MP Cassette, full size mode)

CONTINUOUS COPY SPEED (copies/min.)

- Metric -

Size	Speed
A3L	20
B4L	23
A4L	27
A4C	35
B5L	30
B5C	40

- Inch -

Size	Speed
11" × 17"L	20
8-1/2" × 14"L	23
8-1/2" × 11"L	28
8-1/2" × 11"C	35

ZOOM RATIOS

		- Metric -	- Inch -
Fixed	Full Size	× 1.000	× 1.000
	Enlargement	× 2.000	× 2.000
		× 1.414	× 1.545
		× 1.224	× 1.294
		× 1.154	× 1.214
	Reduction	× 0.866	× 0.785
		× 0.816	× 0.733
		× 0.707	× 0.647
		× 0.500	× 0.500
Variable	25% to 400% (in 0.1% increments)		

LENS : Through Lens (F = 4.0, f = 62 mm)
EXPOSURE LAMP : Fluorescent Lamp
FUSING TEMPERATURE : 190°C

POWER/CURRENT CONSUMPTION (Copier Only)

Exposure Lamp (Rating)	Fusing Roller Heater Lamp (Rating)	Max. Power Consumption (full system)	Max. Current Consumption (full system)
24V 20W	775W	1050W	120V, 10A 230V, 5A

POWER REQUIREMENTS : 120V, 230V, 50/60Hz

ENVIRONMENTAL CONDITIONS

Temperature	10 to 32°C with a fluctuation of 10°C or less per hour
Humidity	15 to 85% RH with a fluctuation of 10% RH or less per hour
Ambient Illumination	3,000 lux or less
Levelness	1° (1.75 mm/100 mm)

DIMENSIONS : Width ... 616 mm, 24-1/4"
Depth ... 707 mm, 27-3/4"
Height ... 635 mm, 25"
WEIGHT : 55.5 kg, 122-1/4 lbs.

1171SBG0300A

3 PRECAUTIONS FOR INSTALLATION

Installation Site

To ensure safety and utmost performance of the copier, the copier should NOT be used in a place:

- Where it will be subjected to extremely high or low temperature or humidity.
- Which is exposed to direct sunlight.
- Which is in the direct air stream of an air conditioner, heater or ventilator.
- Which puts the operator in the direct stream of exhaust from the copier.
- Which has poor ventilation.
- Where ammonia gas might be generated.
- Which does not have a stable, level floor.
- Where it will be subjected to sudden fluctuations in either temperature or humidity. If a cold room is quickly heated, condensation forms inside the copier, resulting in blank spots in the copy.
- Which is near any kind of heating device.
- Where it may be splashed with water.
- Which is dirty or where it will receive undue vibration.
- Which is near volatile flammables or curtains.

Power Source

Use an outlet with a capacity of 120V/10A, or 220V to 240V/5A or more.

- If any other electrical equipment is sourced from the same power outlet, make sure that the capacity of the outlet is not exceeded.
- Use a power source with little voltage fluctuation.
- Never connect by means of a multiple socket any other appliances or machines to the outlet being used for the copier.
- Make the following checks at frequent intervals:
  ✻Is the power plug abnormally hot?
  ✻Are there any cracks or scrapes in the cord?
  ✻Has the power plug been inserted fully into the outlet?
  ✻Does something, including the copier itself, ride on the power cord?
- Ensure that the copier does not ride on the power cord or communications cable of other electrical equipment, and that it does not become wedged into or underneath the mechanism.

Grounding

To prevent receiving electrical shocks in the case of electrical leakage, always ground the copier.

- Connect the ground wire to:
  ✻The ground terminal of the outlet.
  ✻A grounding contact which complies with the local electrical standards.
- Never connect the ground wire to a gas pipe, the ground wire for a telephone, or a water pipe.

1171SBG0400A

4 PRECAUTIONS FOR USE

To ensure that the copier is used in an optimum condition, observe the following precautions.

- Never place a heavy object on the copier or subject the copier to shocks.
- Insert the power plug all the way into the outlet.
- Do not attempt to remove any panel or cover which is secured while the copier is making copies.
- Do not turn OFF the Power Switch while the copier is making copies.
- Provide good ventilation when making a large number of copies continuously.
- Never use flammable sprays near the copier.
- If the copier becomes inordinately hot or produces abnormal noise, turn it OFF and unplug it.
- Do not turn ON the Power Switch at the same time when you plug the power cord into the outlet.
- When unplugging the power cord, do not pull on the cord; hold the plug and pull it out.
- Do not bring any magnetized object near the copier.
- Do not place a vase or vessel containing water on the copier.
- Be sure to turn OFF the Power Switch at the end of the workday or upon power failure.
- Use care not to drop paper clips, staples, or other small pieces of metal into the copier.

Operating Environment

The operating environmental requirements of the copier are as follows:

- Temperature: 10°C to 32°C with a fluctuation of 10°C per hour
- Humidity: 15% to 85% RH with a fluctuation of 10% RH per hour

Power Requirements

The power source voltage requirements are as follows:

- Voltage Fluctuation: AC120/230V
  - ±10% (Copying performance assured)
  - +10% -15% (Paper feeding performance assured)
- Frequency Fluctuation: 50/60 Hz ±0.3%

1171SBG0500A

5 HANDLING OF THE CONSUMABLES

Before using any consumable, always read the label on the container carefully.

- Use the right toner. The applicable copier model name is indicated on the toner bottle.
- Paper is easily damaged by dampness. To prevent absorption of moisture, store paper, which has been removed from its wrapper but not loaded into the drawer, in a sealed plastic bag in a cool, dark place.
- Keep consumables out of the reach of children.
- Do not touch the PC Drum with bare hands.
- Store the paper, toner, and other consumables in a place free from direct sunlight and away from any heating apparatus.
- The same sized paper is of two kinds, short grain and long grain. Short grain paper should only be fed through the copier crosswise, long grain paper should only be fed lengthwise.
- If your hands become soiled with toner, wash them with soap and water immediately.
- Do not throw away any used consumables (PC Drum, starter, toner, etc.). They are to be collected.

NOTE

Do not burn, bury in the ground, or throw into the water any consumables (PC Drum, starter, toner, etc.).

1171SBG0600A

6 OTHER PRECAUTIONS

The Print Head Unit of this copier uses a laser diode that emits a laser beam. Use the following precautions when performing service jobs at the users' premises.

- When a service job needs to be performed in the laser beam path, such as when working around the Print Head Unit and PC Drum, be sure first to turn the copier OFF.
- If the job requires that the power cord be left plugged in, observe the following precautions

1. Take off your watch, ring, and any other reflective object and wear laser protective goggles.
2. At the job site, select a place that is as far as possible away from the users and that is enclosed by walls.
3. Do not bring a highly reflective tool into the laser beam path during the service job.

1171SBG0700A

7 SYSTEM OPTIONS

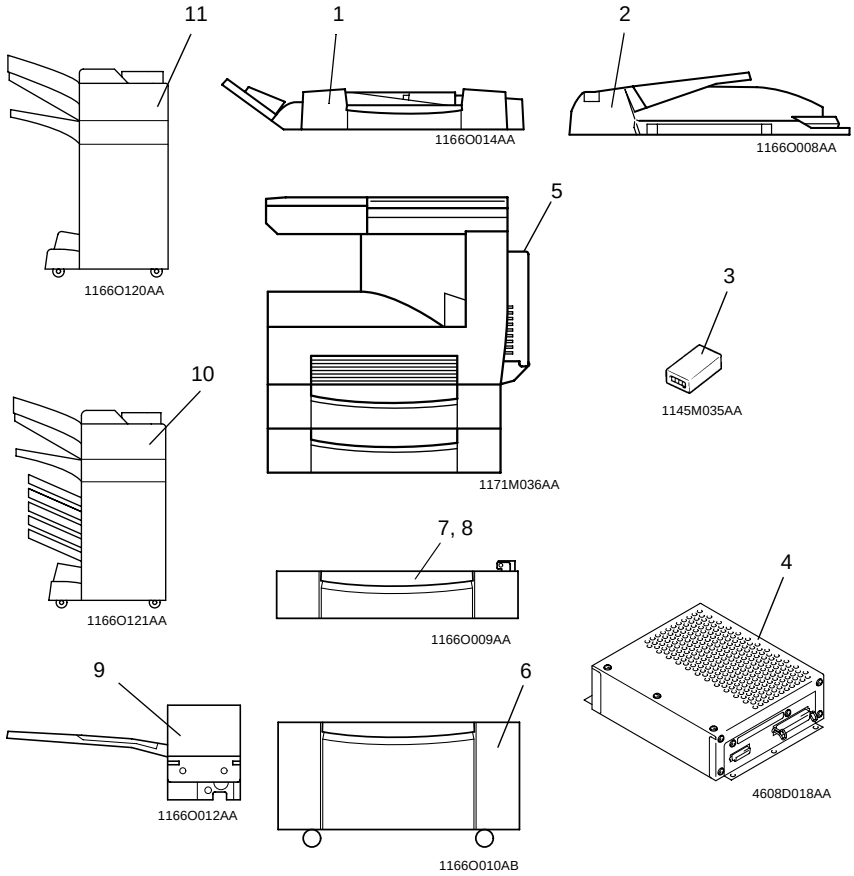

1. Duplexing Document Feeder (AFR-14)
2. Automatic Document Feeder (AF-7)
3. Plug-In Counter
4. Printer Controller (Pi3500)
5. Duplex Unit (AD-10) ✻
6. Large Capacity Cabinet (PF-106)
7. Paper Feed Unit (PF-108)
8. Paper Feed Unit (PF-110)
9. Job Tray (JS-200)
10. Mailbin Finisher (FN-500)
11. Finisher (FN-100)

✻ See the option service manual for the details of AD-10.