FrameMaker Ver.5.5E(PC) Di350 TROUBLESHOOTING
98.12.09

# Di350

# TROUBLESHOOTING

MINOLTA

14413

# CONTENTS

1. INTRODUCTION ..... T-1
1-1. General Precautions ..... T-1
1-2. How to Use This Book ..... T-1
1-3. Reading the Text ..... T-1
2. I/O CHECK ..... T-2
2-1. Controlled Parts Check Procedure ..... T-2
2-2. I/O Check List ..... T-3
3. PAPER TRANSPORT FAILURE ..... T-8
3-1. Paper Misfeed ..... T-8
3-2. Size Error ..... T-10
3-3. Misfeed Detection Sensor Layout ..... T-11
3-4. Types of Misfeed Detection and Detection Timings ..... T-12
3-5. Misfeed Troubleshooting Procedures ..... T-14
(1) Copier Take-Up Misfeed ..... T-14
(2) Manual Bypass Take-Up Misfeed ..... T-16
(3) Separator/Fusing Misfeed ..... T-18
(4) Paper Take-Up/Transport Misfeed (PF-108/PF-110) ..... T-20
(5) Paper Take-Up/Transport Misfeed (PF-106) ..... T-22
(6) Duplex Turnover/Take-Up Misfeed ..... T-25
4. MALFUNCTION ..... T-27
4-1. Detection Timing by Malfunction Code ..... T-27
4-2. Troubleshooting Procedures by Malfunction Code ..... T-30
(1) C0000: M2 Malfunction
C0010: M1 Malfunction
C0045: M3 Malfunction
C004C: M8 Malfunction
C004E: M4 Malfunction
C0070: M6 Malfunction ..... T-30
(2) C0500: Warming-up Failure
C0510: Abnormally Low Fusing Temperature
C0520: Abnormally High Fusing Temperature ..... T-33
(3) C0650: Faulty PC12
C0651: Faulty PC13 ..... T-35
(4) C0990: EMOT Malfunction
C0991: Lift 1 Ascent Motion Failure
C0995: HMOT Malfunction
C0999: Lift 2 Ascent Motion Failure
C099D: Communications Error ..... T-37
(5) C0F32: Faulty E1
C0F33: ATDC Adjustment Failure ..... T-40
(6) C10** to C13** ..... T-41
(7) The Copier Does not Turn ON. ..... T-42
5. IMAGE FAILURE ..... T-43
5-1. Image Failure Troubleshooting ..... T-43
5-2. Initial Checks ..... T-43
5-3. Troubleshooting Procedures by Image Failure ..... T-45

(1) Blank Copy ..... T-46
(2) Black Copy ..... T-46
(3) Low Image Density ..... T-47
(4) Foggy Background ..... T-48
(5) Black Streaks or Bands ..... T-49
(6) Black Spots ..... T-49
(7) Blank Streaks or Bands ..... T-50
(8) Void Areas ..... T-50
(9) Smear on Back ..... T-51
(10) Uneven Image Density ..... T-51
(11) Gradation Reproduction Failure ..... T-51
(12) Rough Image ..... T-52
(13) Periodically Uneven Image ..... T-52

# 1 INTRODUCTION

## 1-1. General Precautions

1. When servicing the copier with its covers removed, use utmost care to prevent your hands, clothing, and tools from being caught in revolving parts including the chains and gears. When servicing the copier with the Rear Cover removed, be sure to fit the interlock switch actuating jig in position.
2. Before attempting to replace parts and unplug connectors, make sure that the power cord of the copier has been unplugged from the wall outlet.
3. Never create a closed circuit across connector pins except those specified in the text and on the printed circuit.
4. When creating a closed circuit and measuring a voltage across connector pins specified in the text, be sure to use the green wire (GND).
5. When the user is using a word processor or personal computer from a wall outlet of the same line, take necessary steps to prevent the circuit breaker from opening due to overloads.
6. Keep all disassembled parts in good order and keep tools under control so that none will be lost or damaged.

## 1-2. How to Use This Book

1. If a component on a PWB or any other functional unit including a motor is defective, the text only instructs you to replace the whole PWB or functional unit and does not give troubleshooting procedures applicable within the defective unit.
2. All troubleshooting procedures contained herein assume that there are no breaks in the harnesses and cords and all connectors are plugged into the right positions.
3. For the removal procedures of covers and parts, see DIS/REASSEMBLY, ADJUSTMENT.
4. The troubleshooting procedures are given in the order of greater frequency of trouble or order of operation.
5. The procedures preclude possible malfunctions due to noise and other external causes.

## 1-3. Reading the Text

1. The paper transport failure troubleshooting procedures are given according to the symptom. First identify the location where the paper is present and start the procedure for that particular location. For malfunction troubleshooting, start with step 1 and onward.
2. Make checks in numerical order of steps and, if an item is checked okay, go to the next step.

Pattern 1

| Step | Check Item | Result | Action |
|---|---|---|---|
| 1 | Is--? | YES | Do this. |
| 2 | | ↑ | |

Go to step 2 if you answered No.

Pattern 2

| Step | Check Item | Result | Action |
|---|---|---|---|
| 1 | Is--? | YES | Do this. |
| | | NO | Check that. |
| 2 | | | ↑ |

Go to step 2 if it checks okay.

# 2 I/O CHECK

## 2-1. Controlled Parts Check Procedure

To allow the Tech. Rep. to easily and safely determine whether a particular controlled part is fully operational, this copier provides the following provision: checking the data of the input port of the board IC with the copier in the standby state (including a misfeed, malfunction, and closure failure condition) allows the Tech. Rep. to determine whether signals are properly input to a controlled part.

<Procedure>
1. When a misfeed or malfunction occurs, locate on a circuit diagram accompanying the text the controlled part which is probably defective.
2. Select “I/O Check” from the Tech. Rep. Mode menu screen and then access the screen which contains the controlled part picked out in step 1 above. (See SWITCHES ON PWBs/TECH. REP. MODE.)
3. Check the input port data to determine if a signal is probably input to the controlled part.

<Controlled Part Check Procedure Through Checking Input Port Data>

**Example**
When a paper misfeed occurs in the paper take-up section of the copier, Synchronizing Roller Sensor PC2 is considered to be responsible for it.

<Procedure>
1. Remove the sheet of paper misfed.
2. From the I/O Check list, it is found that the signal input to PC2 is “Timing Roller.”
3. Select “I/O Check” from Tech. Rep. Mode and then “Printer.” Now, access the screen that contains “Timing Roller.”
4. Check that the input port data of “Timing Roller” is “0” (sensor is blocked).
5. Move the PC2 actuator to unblock the sensor.
6. Check at this time that the input port data on the screen changes from “0” to “1.”

1: PC2 is operational. 0: PC2 is faulty.

## 2-2. I/O Check List

<I/O Check Screens>

- The following screens are only typical and the input data shown does not necessarily represent the actual one.

IR

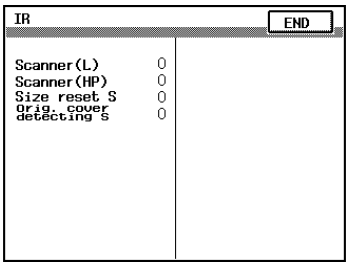


1171T002CA

Printer

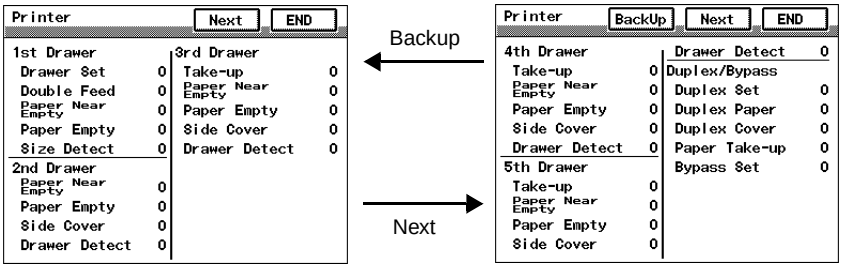


1171T030CA

1171T004CA

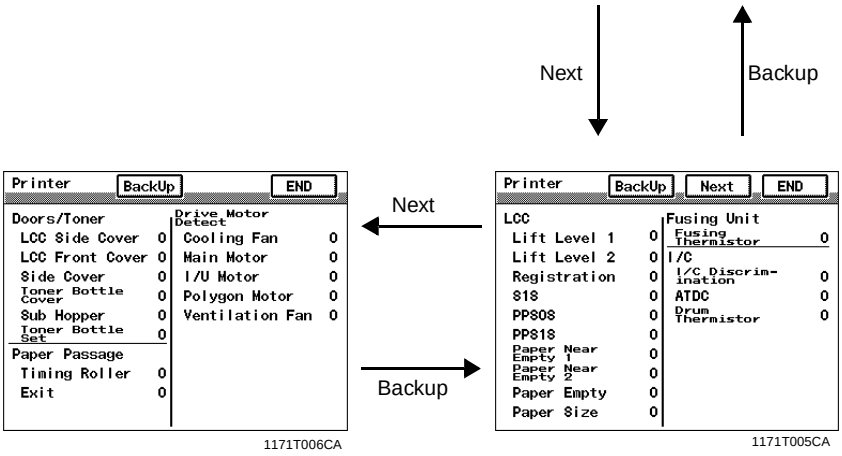


1171T006CA

1171T005CA

<I/O Check List>

IR

| Symbol | Panel Display | Parts/Signal Name | Operation Characteristics/Panel Display | | Input Board | IC No. | Port No. | CN/PJ No. |
|---|---|---|---|---|---|---|---|---|
| | | | 1 | 0 | | | | |
| PC13 | Scanner (L) | Scanner Home Position Sensor 2 | Blocked | Unblocked | HGB Board | — | —— | CN7HGB-27 |
| PC12 | Scanner (HP) | Scanner Home Position Sensor 1 | At home | Not at home | | — | —— | CN7HGB-26 |
| S5 | Size reset S | Size Reset Switch | When closed | When opened | | — | —— | CN7HGB-24 |
| PC14 | Orig. cover detecting S | Original Cover Detecting Sensor | Within 15° | 15° or more | | — | —— | CN7HGB-25 |

Printer

| Symbol | Panel Display | | Parts/Signal Name | | Operation Characteristics/Panel Display | | Input Board | IC No. | Port No. | CN/PJ No. |
|---|---|---|---|---|---|---|---|---|---|---|
| | | | | | 1 | 0 | | | | |
| PC6 | 1st Drawer | Drawer Set | Cassette Set Sensor | | In position | Out of position | Master Board PWB-A | IC1 | PO1 | PJ13A-5B |
| PWB-H | | Double Feed | Double Feed Detecting Board | | Blocked ✻1 | Unblocked ✻1 | | IC1 | PO2 | PJ14A-8B |
| PC5 | | Paper Near Empty | Paper Near Empty Sensor | | Unblocked | Blocked | | IC1 | PO3 | PJ13A-2B |
| PC4 | | Paper Empty | Paper Empty Sensor | | Paper not present | Paper present | | IC1 | PO5 | PJ14A-13A |
| PWB-I | | Size Detect | Paper Size Detecting Board | | Analog value | | | IC1 | P103/ AN3 | PJ14A-1B to PJ14A-4B |
| S5 | 2nd Drawer | Paper Near Empty | Paper Near Empty Sensor | | Unblocked | Blocked | Cassette Main Board PWB-A | IC1 | P12 | PJ3A-11B |
| S4 | | Paper Empty | Paper Empty Sensor | | Paper not present | Paper present | | IC1 | P6 | PJ3A-5B |
| S2 | | Side Cover | Side Cover Set Sensor | | When opened | When closed | | IC1 | P9 | PJ3A-8B |
| S1 | | Drawer Detect | Cassette Set Switch | | In position: 2 displayed Out of position: 0 displayed | | | IC1 | P11 | PJ3A-12A |
| S3 | 3rd Drawer | Take-up | Take-Up Sensor | | Paper present | Paper not present | Cassette Main Board PWB-A: PF-108/ PF-110 | IC1 | P5 | PJ3A-2B |
| S5 | | Paper Near Empty | Paper Near Empty Sensor | | Unblocked | Blocked | | IC1 | P12 | PJ3A-11B |
| S4 | | Paper Empty | Paper Empty Sensor | | Paper not present | Paper present | | IC1 | P6 | PJ3A-5B |
| S2 | | Side Cover | Side Cover Set Sensor | | When opened | When closed | | IC1 | P9 | PJ3A-8B |
| S1 | | Drawer Detect | Cassette Set Switch | When PF-110 is used | In position | Out of position | | IC1 | P10 | PJ3A-9A |
| | | | | When PF-108 is used | In position: 2 displayed Out of position: 0 displayed | | | IC1 | P11 | PJ3A-12A |

✻ 1: The display of 1 or 0 is selected only while Main Motor M2 is being energized.

| Symbol | Panel Display | | Parts/Signal Name | | Operation Characteristics/Panel Display | | Input Board | IC No. | Port No. | CN/PJ No. |
|---|---|---|---|---|---|---|---|---|---|---|
| | | | | | 1 | 0 | | | | |
| S3 | 4th Drawer | Take-up | Take-Up Sensor | | Paper present | Paper not present | Cassette Main Board PWB-A: PF-108/ PF-110 | IC1 | P5 | PJ3A-2B |
| S5 | | Paper Near Empty | Paper Near Empty Sensor | | Unblocked | Blocked | | IC1 | P12 | PJ3A-11B |
| S4 | | Paper Empty | Paper Empty Sensor | | Paper not present | Paper present | | IC1 | P6 | PJ3A-5B |
| S2 | | Side Cover | Side Cover Set Sensor | | When opened | When closed | | IC1 | P9 | PJ3A-8B |
| S1 | | Drawer Detect | Cassette Set Switch | When PF-110 is used | In position | Out of position | | IC1 | P10 | PJ3A-9A |
| | | | | When PF-108 is used | In position: 2 displayed Out of position: 0 displayed | | | IC1 | P11 | PJ3A-12A |
| S3 | 5th Drawer | Take-up | Take-Up Sensor | | Paper present | Paper not present | | IC1 | P5 | PJ3A-2B |
| S5 | | Paper Near Empty | Paper Near Empty Sensor | | Unblocked | Blocked | | IC1 | P12 | PJ3A-11B |
| S4 | | Paper Empty | Paper Empty Sensor | | Paper not present | Paper present | | IC1 | P6 | PJ3A-5B |
| S2 | | Side Cover | Side Cover Set Sensor | | When opened | When closed | | IC1 | P9 | PJ3A-8B |
| S1 | | Drawer Detect | Cassette Set Switch | When PF-110 is used | In position | Out of position | | IC1 | P10 | PJ3A-9A |
| | | | | When PF-108 is used | In position: 2 displayed Out of position: 0 displayed | | | IC1 | P11 | PJ3A-12A |
| —— | Duplex/ Bypass | Duplex Set | Duplex Unit Set signal | | In position | Out of position | Master Board PWB-A | IC1 | P91 | PJ4A-3B |
| PI1 | | Duplex Paper | Duplex Unit Transport Sensor | | Paper present | Paper not present | | IC1 | P92 | PJ4A-2B |
| S2 | | Duplex Cover | Duplex Unit Door Set Sensor | | When opened | When closed | | IC1 | P90 | PJ4A-1B |
| PC8 | | Paper Take-up | Manual Feed Paper Take-Up Sensor | | Paper present | Paper not present | | IC1 | P00 | PJ4A-7B |
| —— | | Bypass Set | Manual Bypass Tray Set signal | | In position | Out of position | | IC1 | P30 | PJ4A-9B |

| Symbol | Panel Display | | Parts/Signal Name | Operation Characteristics/Panel Display | | Input Board | IC No. | Port No. | CN/PJ No. |
|---|---|---|---|---|---|---|---|---|---|
| | | | | 1 | 0 | | | | |
| LS1 | LCC | Lift Level 1 | Lift-Up Sensor 1 | At upper limit | Not at upper limit | LCC Main Board PWB-A: PF-106 | IC4 | P74/ ANI4 | CN4A-6 |
| LS2 | | Lift Level 2 | Lift-Up Sensor 2 | At upper limit | Not at upper limit | | IC4 | P73/ ANI3 | CN4A-9 |
| RSEN | | Registration | Registration Sensor | Paper present | Paper not present | | IC4 | P22/ INTP1 | CN4A-2 |
| S1 | | S1S | Paper Standby Position Sensor | Paper present ✻2 | Paper not present ✻2 | | IC4 | P23/ INTP2/ CI | CN3A-5 |
| PPS0 | | PPS0S | LCC Take-Up Sensor | Paper present | Paper not present | | IC4 | P24/ INTP3 | CN4A-11 |
| PPS1 | | PPS1S | Paper Empty Sensor 1 | Paper present | Paper not present | | IC4 | P25/ INTP4/ ASCK | CN3A-2 |
| RS1 | | Paper Near Empty 1 | Paper Near Empty Sensor 1 | Blocked | Unblocked | | IC4 | P75/ ANI5 | CN6A-1 |
| RS2 | | Paper Near Empty 2 | Paper Near Empty Sensor 2 | Blocked | Unblocked | | IC4 | P76/ ANI6 | CN5A-5 |
| PPS2 | | Paper Empty | Paper Empty Sensor 2 | Paper present | Paper not present | | IC4 | P72/ ANI2 | CN3A-8 |
| SW1 | | Paper Size | DIP switch | Letter C: 0 displayed<br>A4C: 1 displayed<br>B5C: 2 displayed | | | IC4 | P13, P14, P15 | ——— |
| TH1 | Fusing Unit | Fusing Thermistor | Fusing Roller Thermistor | Analog value | | Master Board PWB-A | IC1 | P107/ AN7 | PJ16A-5 |
| —— | I/C | I/C Discrimination | I/C Type Detection signal | Analog value | | | IC1 | P100/ AN0 | PJ15A-3 |
| E1 | | ATDC | ATDC Sensor | Analog value | | | IC1 | P106/ AN6 | PJ15A-5 |
| TH2 | | Drum Thermistor | I/C Thermistor | Analog value | | | IC1 | P104/ AN4 | PJ13A-10A |

✻ 2: The display of 1 or 0 is selected only while LCC Transport Motor HMOT is being energized.

| Symbol | Panel Display | | Parts/Signal Name | Operation Characteristics/Panel Display | | Input Board | IC No. | Port No. | CN/PJ No. |
|---|---|---|---|---|---|---|---|---|---|
| | | | | 1 | 0 | | | | |
| SIDE | Doors/ Toner | LCC Side Cover | Side Cover Set Sensor | When opened | When closed | LCC Main Board PWB-A | IC4 | P34/ T00 | CN3A-12 |
| FRONT | | LCC Front Cover | LCC Set Sensor | Out of position | In position | | IC4 | P35/ T01 | CN6A-4 |
| S2 | | Side Cover | Side Cover Interlock Switch | When opened | When closed | Master Board PWB-A | IC1 | P31 | PJ7A-1 |
| PC11 | | Toner Bottle Cover | Toner Bottle Cover Sensor | When opened | When closed | | IC1 | P33 | PJ11A-5B |
| S4 | | Sub Hopper | Sub Hopper Toner Empty Switch | Toner not loaded: 1 and 0 alternately displayed. Toner loaded: 0 displayed | | | IC1 | P06 | PJ11A-7B |
| PC10 | | Toner Bottle Set | Toner Bottle Home Position Sensor | At home | Not at home | | IC1 | P40 | PJ11A-2B |
| PC2 | Paper Passage | Timing Roller | Synchronizing Roller Sensor | Paper present | Paper not present | | IC1 | P41 | PJ13A-7A |
| PC3 | | Exit | Paper Exit Sensor | Paper present | Paper not present | | IC1 | P77 | PJ13A-12A |
| M3 | Drive Motor Detect | Cooling Fan | Fusing Cooling Fan Motor/LOCK | When energized: 1 and 0 alternately displayed. When deenergized: 0 displayed | | | IC1 | P04 | PJ13A-5A |
| M2 | | Main Motor | Main Motor/LOCK | When energized | When deenergized | | IC1 | P43 | PJ16A-2 |
| M1 | | I/U Motor | I/C Motor/LOCK | When energized | When deenergized | | IC1 | P42 | PJ16A-4 |
| M10 | | Polygon Motor | Polygon Motor/ LOCK | When energized | When deenergized | | IC1 | P95 | PJ8A-4 |
| M8 | | Ventilation Fan | Ozone Fan Motor | When energized: 1 and 0 alternately displayed. When deenergized: 0 displayed | | | IC1 | P51 | PJ11A-3A |

# 3 PAPER TRANSPORT FAILURE

## 3-1. Paper Misfeed

When a paper misfeed occurs, the Touch Panel shows the corresponding message, misfeed location, and paper location.

| | |
|---|---|
| ⊗ display | Misfeed location |
| ○ display | Paper location |

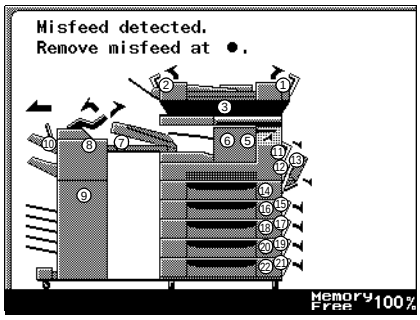

1167T007CA

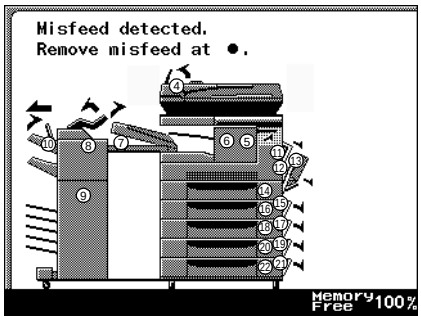

1167T008CA

| ⊗ or ○ Display | Misfeed/Paper Location | Ref. Page |
|---|---|---|
| 1 | AFR-14 take-up, AFR-14 single feed | See the relevant option service manual. |
| 2 | AFR-14 reverse, AFR-14 exit | |
| 3 | AFR-14 transport | |
| 4 | AF-7 take-up, AF-7 transport | |
| 5 | JS-200 transport | |
| 6 | JS-200 exit | |
| 7 | Horizontal transport | |
| 8 | Finisher transport, 1st Tray exit, Elevator Tray exit | |
| 9 | Mailbin transport | |
| 10 | Finisher Tray | |
| 11 | Separator, Fusing Unit | (3) |
| 12 | Manual Bypass take-up | (2) |
| 13 | Duplex turnover, Duplex take-up | (6) |
| 14 | 1st Drawer take-up | (1) |
| 15 | 2nd Drawer transport | (1) |
| 16 | 2nd Drawer take-up | (1) |
| 17 | 3rd Drawer transport (PF-108/PF-110/PF-106) | (4) or (5) |
| 18 | 3rd Drawer take-up (PF-108/PF-110/PF-106) | (4) or (5) |
| 19 | 4th Drawer transport (PF-108/PF-110/PF-106) | (4) or (5) |
| 20 | 4th Drawer take-up (PF-108/PF-110/PF-106) | (4) or (5) |
| 21 | 5th Drawer transport (PF-108/PF-110) | (4) |
| 22 | 5th Drawer take-up (PF-108/PF-110) | (4) |

✻ If a communications error occurs between UN2 and PWB-A during a copy cycle, it forces a paper misfeed condition (○ displayed on the Touch Panel). If that happens, check the circuit between UN2 and PWB-A for proper connection and, if it is intact, replace the board.

<Resetting the Display>

| Misfeed in the copier | Misfeed in the option |
|---|---|
| Remove all sheets of paper misfed and left inside, and then open and close the Side Cover. | Remove all sheets of paper misfed and left inside, and then raise and lower or disconnect and reconnect the option. |

✻ If the misfeed display is not reset by these procedures, check the misfeed detecting sensor at the paper location.

## 3-2. Size Error

The following warning screen appears after a misfeed display has been reset if the actual size of the paper loaded in a paper source differs from the paper size set for that particular paper source.

[1st to 5th Drawer]

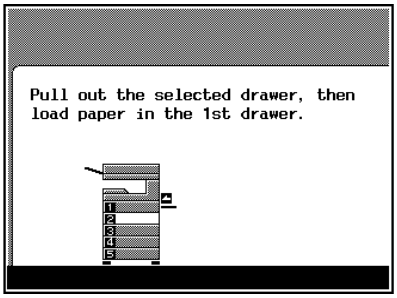


1171T009CA

[Manual Bypass]

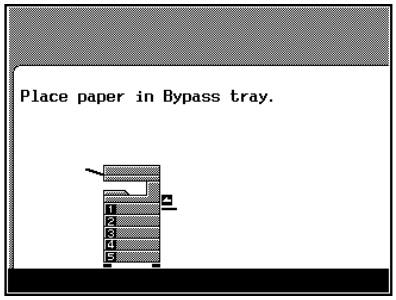


1171T010CA

✻ 1st to 5th Drawer: A size error is indicated by a highlighted paper source in the copier overview display. (In the above example, there is a size error in the 2nd Drawer.)

<Resetting the Size Error Display>
Slide out the drawer, then slide it back in, or load paper in the Manual Bypass Tray.

<Causes of a Size Error>
- Wrong paper size settings have been made.
- The user loads paper of a size different from what is set for the paper source.
- Two or more sheets of paper are being taken up and fed in.

## 3-3. Misfeed Detection Sensor Layout

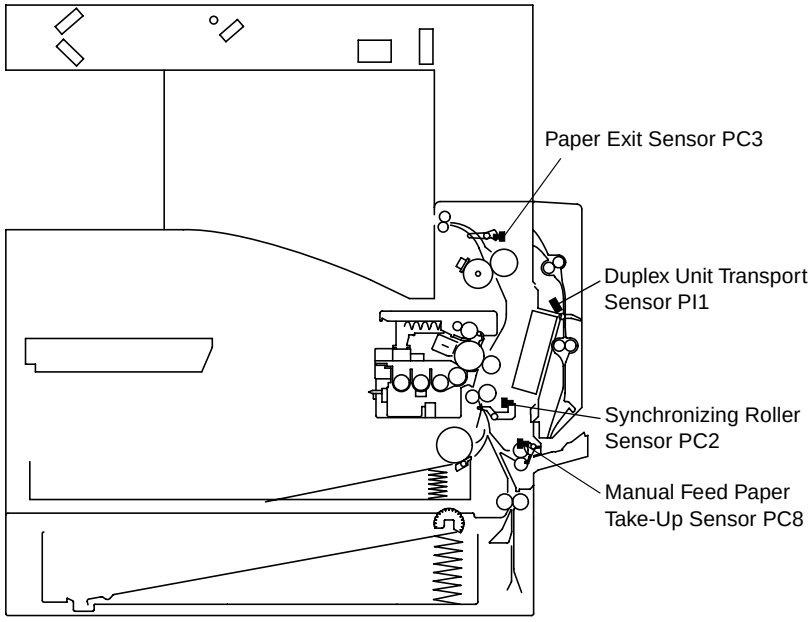

## 3-4. Types of Misfeed Detection and Detection Timings

- The following are the types of misfeed detection and detection timings for different misfeed locations.

***NOTE***
*For misfeed detection types and detection timings of options, see the relevant option service manual.*

<Copier Take-Up Misfeed>

| Type | Detection Timing | Timer Value T (sec.) |
|---|---|---|
| Paper take-up failure detection | • 1st Drawer paper take-up:<br>Synchronizing Roller Sensor PC2 is not unblocked (H) even after the lapse of T sec. after Paper Take-Up Solenoid SL1 has been energized for the second paper take-up retry sequence. | 0.92 |
| | • 2nd Drawer paper take-up:<br>PC2 is not unblocked (H) even after the lapse of T sec. after SL1 has been energized for the first paper take-up retry sequence. | 1.63 |
| | • 1st/2nd Drawer paper take-up:<br>PC2 is unblocked (H) within T sec. after SL1 has been energized. | 0.20 |

<Manual Bypass Take-Up Misfeed>

| Type | Detection Timing | Timer Value T (sec.) |
|---|---|---|
| Bypass paper take-up failure detection | PC2 is not unblocked (H) even after T sec. after Manual Feed Paper Take-Up Clutch CL3 has been energized. | 0.64 |
| | PC2 is unblocked (H) within T sec. after CL3 has been energized. | 0.20 |
| Paper left | Manual Feed Paper Take-Up Sensor PC8 is blocked (L) when the Power Switch is turned ON, CPU is reset, or cover is opened and closed. | ——— |

<Separator Misfeed>

| Type | Detection Timing | Timer Value T (sec.) |
|---|---|---|
| Leading edge detection by Paper Exit Sensor PC3 | PC3 is not blocked (L) even after the lapse of T sec. after PC2 has been unblocked (H). | 1.38 ✻ |
| Trailing edge detection by Synchronizing Roller Sensor PC2 | PC2 is not blocked (L) even after the lapse of T sec. after it has been unblocked (H). | 3.02 ✻ |
| | PC2 is blocked (L) within T sec. after it has been unblocked (H). | 0.75 |
| Paper is stationary | During a sequence of detecting a paper size based on the period of time between when Synchronizing Clutch CL1 is energized and when PC2 is blocked (L), the paper size detected is longer than the size data sent from the controller by +260 mm or more. | ——— |
| Size error detection | The paper size detected based on the period of time between when CL1 is energized and when PC2 is blocked (L) is more than the size data sent from the controller by ±20 mm or more. | ——— |
| Paper left | PC2 is unblocked (H) when the Power Switch is turned ON, CPU is reset, or cover is opened and closed. | ——— |

✻ Excludes the period of time during which the paper is stationary before the Synchronizing Roller.

<Fusing Misfeed>

| Type | Detection Timing | Timer Value T (sec.) |
|---|---|---|
| Trailing edge detection by Paper Exit Sensor PC3 | PC3 is not unblocked (H) even after the lapse of T sec. after PC2 has been blocked (L). | 1.41 |
| Paper left | PC3 is blocked (L) when the Power Switch is turned ON, CPU is reset, or cover is opened and closed. | ——— |

<Duplex Turnover/Take-Up Misfeed>

| Type | Detection Timing | Timer Value T (sec.) |
|---|---|---|
| Leading edge detection during Duplex transport | Duplex Unit Transport Sensor PI1 is not blocked (H) even after the lapse of T sec. after Paper Exit Sensor PC3 has been unblocked (H). | 1.52 |
| Paper take-up failure detection | PC2 is not unblocked (H) even after the lapse of T sec. after the Duplex paper take-up sequence has been started. | 0.88 |
| | PC2 is unblocked (H) within T sec. after the Duplex paper take-up sequence has been started. | 0.20 |
| Paper left | PI1 is blocked (H) when the Power Switch is turned ON, CPU is reset, or cover is opened and closed. | ——— |

## 3-5. Misfeed Troubleshooting Procedures

### (1) Copier Take-Up Misfeed

| Relevant Electrical Parts | |
|---|---|
| Paper Take-Up Solenoid SL1 | Master Board PWB-A |
| Synchronizing Roller Sensor PC2 | Cassette Main Board PWB-A |

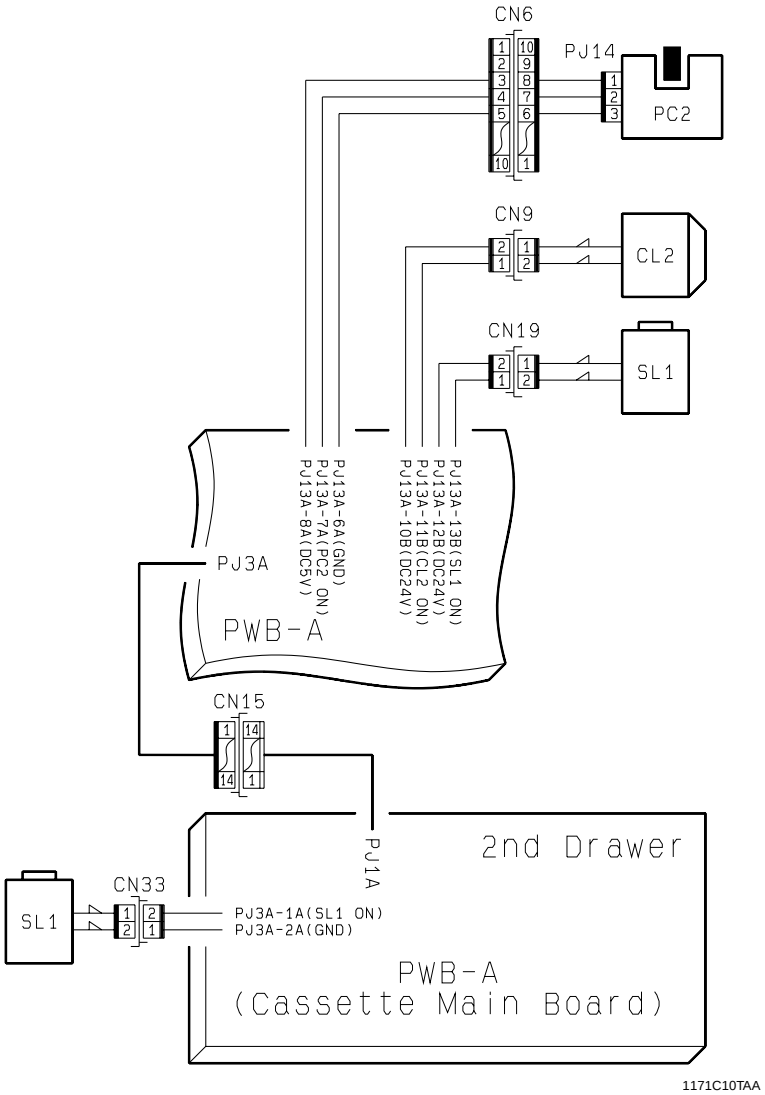

<Copier Take-Up Misfeed Troubleshooting Procedure>

| Symptom | Step | Check Item | Result | Action |
|---|---|---|---|---|
| Paper is not taken up at all. | 1 | Does the paper being used meet the product specifications? | NO | Instruct the user to use the paper that meets product specifications. |
| | 2 | Is the paper curled, wavy, or damp? | YES | Change the paper. Instruct the user on the storage of paper. |
| | 3 | Are the Edge Guide and Trailing Edge Stop (of the drawer) positioned to the exact size of the paper used? | NO | Slide the guides to the exact size of the paper. |
| | 4 | Is the Paper Take-Up Roll deformed, worn, or dirty with paper dust? | YES | Clean or change the Paper Take-Up Roll. |
| | 5 | If the Paper Lifting Plate dirty or deformed? | YES | Clean or change the Paper Lifting Plate. |
| | 6 | Has the misfeed been detected while the Multi Purpose Cassette was being used? | YES | Check steps 7 and 8. |
| | | | NO | Check steps 9 and onward. |
| | 7 | Is the Paper Separator Pad deformed, worn, or dirty with paper dust? | YES | Clean or change the Paper Separator Pad. |
| | 8 | Check SL1 for operation. Does the voltage across CN19-1 on the PWB-A side and GND change from DC24V to DC0V when the Start key is pressed? | YES | Check various parts for possible overload and, if they are okay, change SL1. |
| | | | NO | Change PWB-A. |
| | 9 | Is the Paper Separator Finger dirty or deformed? | YES | Clean or change the Paper Separator Finger. |
| | 10 | Check CL2 for operation. Does the voltage across CN9-1 on the PWB-A side and GND change from DC24V to DC0V when the Start key is pressed? | NO | Change PWB-A. |
| | 11 | Check SL1 for operation. Does the voltage across PJ3A-1A on PWB-A (Cassette Main Board) and GND change from LOW to HIGH when the Start key is pressed? | YES | Check various parts for possible overload and, if they are okay, change SL1 or CL2. |
| | | | NO | Change PWB-A (Cassette Main Board) or PWB-A. |
| • Paper is at a stop before the vertical transport section.<br>• Paper is at a stop near the Synchronizing Rollers. | 1 | Is the Vertical Transport Roller deformed, worn, or dirty with paper dust? | YES | Clean or change the Vertical Transport Roller. |
| | 2 | If the Vertical Transport Guide Plate dirty or deformed? | YES | Clean or change the Vertical Transport Guide Plate. |
| | 3 | Is PC2 fully operational? Check the input data using I/O Check. | YES | Check various parts for possible overload and, if they are okay, change PWB-A. |
| | | | NO | Check the PC2 actuator for operation and, if it is intact, change PC2. |

**(2) Manual Bypass Take-Up Misfeed**

| Relevant Electrical Parts | |
|---|---|
| Manual Feed Paper Take-Up Clutch CL3 | Manual Feed Paper Take-Up Sensor PC8 |
| Synchronizing Roller Sensor PC2 | Master Board PWB-A |

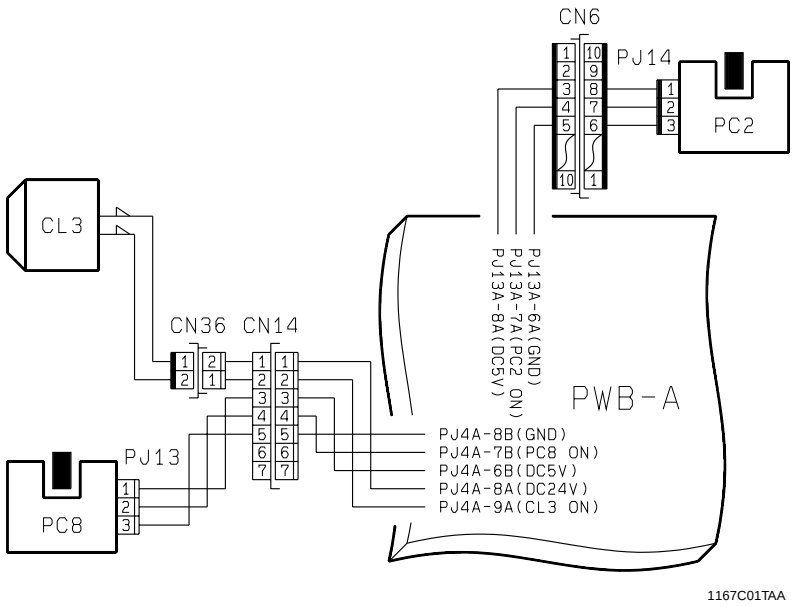


1167C01TAA

<Manual Bypass Take-Up Misfeed Troubleshooting Procedure>

| Symptom | Step | Check Item | Result | Action |
|---|---|---|---|---|
| Paper is not taken up at all. | 1 | Does the paper being used meet the product specifications? | NO | Instruct the user to use the paper that meets product specifications. |
| | 2 | Is the paper curled, wavy, or damp? | YES | Change the paper. Instruct the user on the storage of paper. |
| | 3 | Is the Manual Feed Paper Take-Up Roller or Roll deformed, worn, or dirty with paper dust? | YES | Clean or change the Manual Feed Paper Take-Up Roller or Roll. |
| | 4 | Is PC8 fully operational? Check the input data using I/O Check. | NO | Check the PC8 actuator for operation and, if it is intact, change PC8. |
| | 5 | Check CL3 for operation. Does the voltage across CN14-2 and GND change from DC24V to DC0V when the misfeed condition is reset? | YES | Check various parts for possible overload and, if they are okay, change CL3. |
| | | | NO | Change PWB-A. |
| Paper is at a stop near the Synchronizing Rollers. | 1 | Is PC2 fully operational? Check the input data using I/O Check. | YES | Check various parts for possible overload and, if they are okay, change PWB-A. |
| | | | NO | Check the PC2 actuator for operation and, if it is intact, change PC2. |

**(3) Separator/Fusing Misfeed**

| Relevant Electrical Parts | |
|---|---|
| Paper Exit Sensor PC3 | Synchronizing Clutch CL1 |
| Synchronizing Roller Sensor PC2 | Master Board PWB-A |

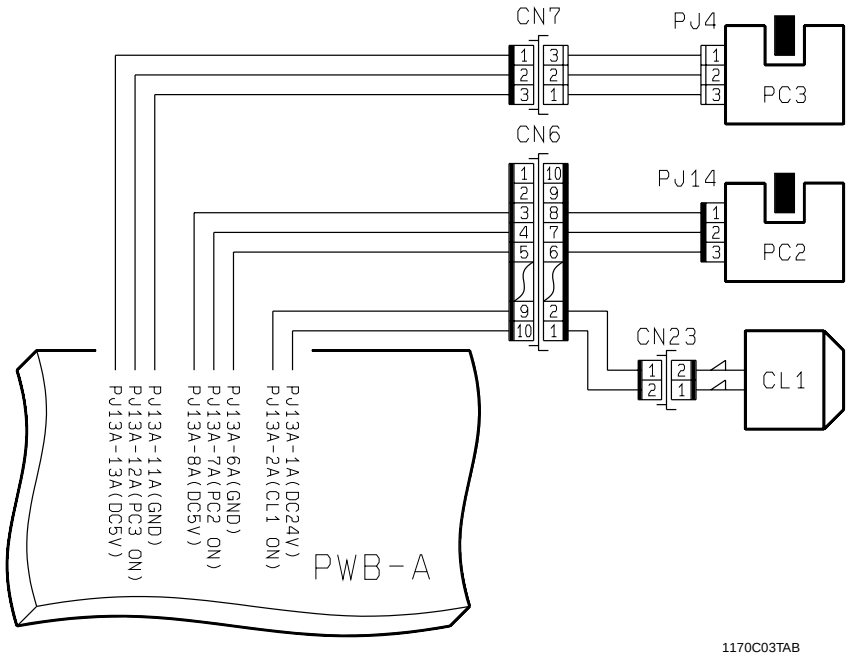


1170C03TAB

<Separator/Fusing Misfeed Troubleshooting Procedure>

| Symptom | Step | Check Item | Result | Action |
|---|---|---|---|---|
| Paper is at a stop near the Synchronizing Rollers. | 1 | Are the Synchronizing Rollers deformed, worn, or dirty with paper dust? | YES | Clean or change the Synchronizing Rollers. |
| | 2 | Is a good length of loop formed before the Synchronizing Rollers? | NO | Select the following functions in this order: Tech. Rep. Mode → Tech. Rep. Choice → Printer → Loop Adjustment and make the loop adjustment. |
| | 3 | Is a size error displayed when the misfeed display is reset? | YES | Check that the size of the paper actually loaded in the current paper source matches the size set for it. |
| | 4 | Is PC2 fully operational? Check the input data using I/O Check. | NO | Check the PC2 actuator for operation and, if it is intact, change PC2. |
| | 5 | Check CL1 for operation. Does the voltage across CN6-9 on the PWB-A side and GND change from DC24V to DC0V when the Start key is pressed? | YES | Check various parts for possible overload and, if they are okay, change CL1. |
| | | | NO | Change PWB-A. |
| Paper is at a stop near the PC Drum. | 1 | Is the Pre-Image Transfer Guide Plate dirty or deformed? | YES | Clean or change the guide plate. |
| | 2 | Is the Image Transfer Roller deformed, worn, or dirty with paper dust? | YES | Clean or change the Image Transfer Roller. |
| Paper is wedged at the PC Drum Paper Separator Fingers. | 1 | Are the PC Drum Paper Separator Fingers dirty or deformed? | YES | Clean or change the separator fingers. |
| | | | NO | Check the clearance between the PC Drum Paper Separator Fingers and PC Drum. |
| Paper is at a stop before the Fusing Rollers. | 1 | Is the Fusing Guide Plate dirty or deformed? | YES | Clean or change the Fusing Guide Plate. |
| Paper is at a stop at the Fusing Rollers. | 1 | Are the Fusing Rollers deformed, worn, or dirty with paper dust? | YES | Clean or change the Fusing Rollers. |
| | 2 | Are the Fusing Separator Fingers dirty or deformed? | YES | Clean, correct, or change the Fusing Separator Fingers. |
| Paper is at a stop at the exit section. | 1 | Is the Paper Exit Roller deformed, worn, or dirty with paper dust? | YES | Clean or change the Paper Exit Roller. |
| | 2 | Is PC3 fully operational? Check the input data using I/O Check. | YES | Check various parts for possible overload and, if they are okay, change PWB-A. |
| | | | NO | Check the PC3 actuator for operation and, if it is intact, change PC3. |

**(4) Paper Take-Up/Transport Misfeed (PF-108/PF-110)**

| Relevant Electrical Parts | |
|---|---|
| Paper Take-Up Solenoid SL1 | Master Board PWB-A |
| Take-Up Sensor S3 | Cassette Main Board PWB-A |
| Synchronizing Roller Sensor PC2 | Cassette Main Board PWB-A: PF-108/PF-110 |
| Transport Clutch CL2 | |

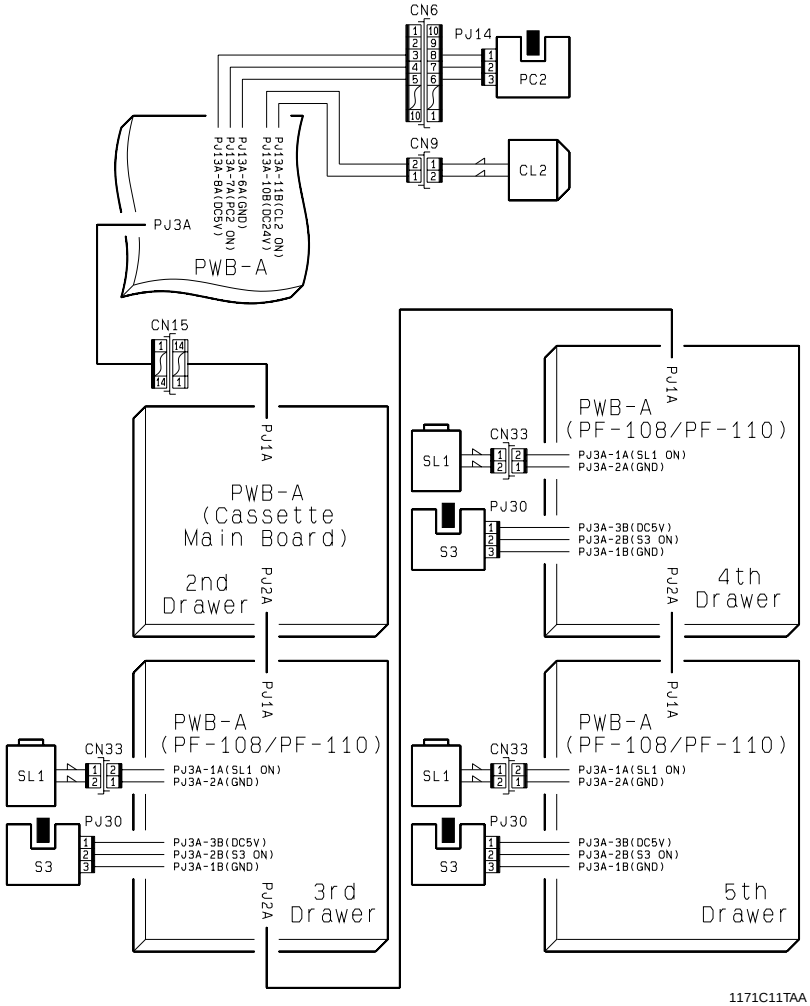

<Paper Take-Up/Transport Misfeed (PF-108/PF-110) Troubleshooting Procedure>

| Symptom | Step | Check Item | Result | Action |
|---|---|---|---|---|
| Paper is not taken up at all. | 1 | Does the paper being used meet the product specifications? | NO | Instruct the user to use the paper that meets product specifications. |
| | 2 | Is the paper curled, wavy, or damp? | YES | Change the paper. Instruct the user on the storage of paper. |
| | 3 | Are the Edge Guide and Trailing Edge Stop (of the drawer) positioned to the exact size of the paper used? | NO | Slide the guides to the exact size of the paper. |
| | 4 | Is the Paper Take-Up Roll deformed, worn, or dirty with paper dust? | YES | Clean or change the Paper Take-Up Roll. |
| | 5 | Is the Paper Lifting Plate dirty or deformed? | YES | Clean or change the Paper Lifting Plate. |
| | 6 | Is the Paper Separator Finger dirty or deformed? | YES | Clean or change the Paper Separator Finger. |
| | 7 | Check CL2 for operation.<br>Does the voltage across CN9-1 on the PWB-A side and GND change from DC24V to DC0V when the Start key is pressed? | NO | Change PWB-A. |
| | 8 | Check SL1 for operation.<br>Does the voltage across PJ3A-1A on PWB-A (PF-108/PF-110) and GND change from LOW to HIGH when the Start key is pressed? | YES | Check various parts for possible overload and, if they are okay, change SL1 or CL2. |
| | | | NO | Change PWB-A (PF-108/PF-110), PWB-A (Cassette Main Board), or PWB-A, in that order. |
| • Paper is at a stop at the vertical transport section.<br>• Paper is at a stop near the Synchronizing Rollers. | 1 | Is the Vertical Transport Roller deformed, worn, or dirty with paper dust? | YES | Clean or change the Vertical Transport Roller. |
| | 2 | Is the Vertical Transport Guide Plate dirty or deformed? | YES | Clean or change the Vertical Transport Guide Plate. |
| | 3 | Is a size error displayed when the misfeed display is reset? | YES | Check that the size of the paper loaded in the current drawer matches the size set for that drawer. |
| | 4 | ✻ A misfeed is detected at the transport section of the 3rd Drawer.<br>Is PC2 fully operational? Check the input data using I/O Check. | NO | Check the PC2 actuator for operation and, if it is intact, change PC2. |
| | 5 | Are all S3's fully operational? Check the input data using I/O Check. | YES | Check various parts for possible overload and, if they are okay, change PWB-A. |
| | 6 | Does the voltage across PJ3A-2B on PWB-A (PF-108/PF-110) and GND change to DC0V when S3 is blocked and to DC5V when S3 is unblocked? | YES | Change PWB-A (PF-108/PF-110) or PWB-A (Cassette Main Board). |
| | | | NO | Check the S3 actuator for operation and, if it is intact, change S3. |

**(5) Paper Take-Up/Transport Misfeed (PF-106)**

| Relevant Electrical Parts | |
|---|---|
| Take-Up Clutch 1 P1CL | Synchronizing Roller Sensor PC2 |
| Take-Up Clutch 2 P2CL | Transport Clutch CL2 |
| Paper Empty Sensor 1 PPS1 | Take-Up Sensor S3 |
| Paper Standby Position Sensor S1 | LCC Main Board PWB-A: PF-106 |
| Separator Clutch BCL | Cassette Main Board PWB-A: PF-108/PF-110 |
| Registration Clutch RCL | Cassette Main Board PWB-A |
| Registration Sensor RSEN | Master Board PWB-A |

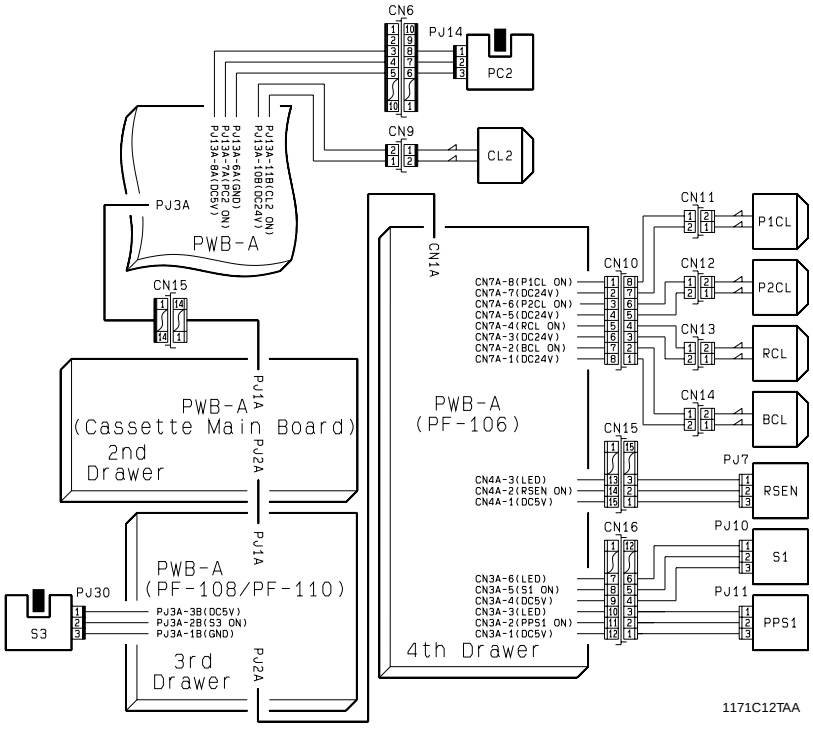


<Paper Take-Up/Transport Misfeed (PF-106) Troubleshooting Procedure>

| Symptom | Step | Check Item | Result | Action |
|---|---|---|---|---|
| • Paper is not taken up at all.<br>• Paper is at a stop before the Paper Feed/ Separator Rolls. | 1 | Does the paper being used meet the product specifications? | NO | Instruct the user to use the paper that meets product specifications. |
| | 2 | Is the paper curled, wavy, or damp? | YES | Change the paper. Instruct the user on the storage of paper. |
| | 3 | Is the Paper Take-Up Roll deformed, worn, or dirty with paper dust? | YES | Clean or change the Paper Take-Up Roll. |

| Symptom | Step | Check Item | Result | Action |
|---|---|---|---|---|
| • Paper is not taken up at all.<br>• Paper is at a stop before the Paper Feed/ Separator Rolls. | 4 | Is PPS1 fully operational? Check the input data using I/O Check. | YES | Perform steps 6 and onward. |
| | 5 | Does the voltage across CN3A-2 on PWB-A (PF-106) and GND change from LOW to HIGH when PPS1 is blocked? | YES | Change PWB-A (PF-106), PWB-A (PF-108/PF-110), or PWB-A (Cassette Main Board), in that order. |
| | | | NO | Change PPS1. |
| | 6 | Is paper fed up to S1 when paper is loaded in Lift 2 only and the drawer is slid into the copier? | YES | Perform steps 8 and onward. |
| | 7 | Check P2CL for operation.<br>Does the voltage across CN7A-6 on PWB-A (PF-106) and GND change from DC24V to DC0V when step 6 is performed again? | YES | Check various parts for possible overload and, if they are okay, change P2CL. |
| | | | NO | Change PWB-A (PF-106), PWB-A (PF-108/PF-110), PWB-A (Cassette Main Board), or PWB-A, in that order. |
| | 8 | Check P1CL for operation.<br>Does the voltage across CN7A-8 on PWB-A (PF-106) and GND change from DC24V to DC0V when step 6 is performed again? | NO | Change PWB-A (PF-106), PWB-A (PF-108/PF-110), PWB-A (Cassette Main Board), or PWB-A, in that order. |
| | 9 | Is S1 fully operational? Check the input data using I/O Check.<br>Does the "S1S" input signal change from 0 to 1 when the drawer loaded with paper is slid into the copier? | YES | Perform steps 11 and onward. |
| | 10 | Does the voltage across CN3A-5 on PWB-A (PF-106) and GND change from LOW to HIGH when step 9 is performed again? | YES | Change PWB-A (PF-106), PWB-A (PF-108/PF-110), or PWB-A (Cassette Main Board), in that order. |
| | | | NO | Change S1. |
| | 11 | Is the Paper Feed Roll or Separator Roll deformed, worn, or dirty with paper dust? | YES | Clean or change the Paper Feed Roll or Separator Roll. |
| | 12 | Check BCL for operation.<br>Does the voltage across CN7A-2 on PWB-A (PF-106) and GND change from DC24V to DC0V when the Start key is pressed? | YES | Check various parts for possible overload and, if they are okay, change P1CL or BCL. |
| | | | NO | Change PWB-A (PF-106), PWB-A (PF-108/PF-110), PWB-A (Cassette Main Board), or PWB-A, in that order. |

| Symptom | Step | Check Item | Result | Action |
|---|---|---|---|---|
| • Paper is at a stop at the vertical transport section.<br>• Paper is at a stop near the Synchronizing Rollers. | 1 | Is the Vertical Transport Roller or Roll deformed, worn, or dirty with paper dust? | YES | Clean or change the Vertical Transport Roller or Roll. |
| | 2 | Is RSEN fully operational? Check the input data using I/O Check. | YES | Check step 4 and onward. |
| | 3 | Does the voltage across CN4A-2 on PWB-A (PF-106) and GND change from LOW to HIGH when RSEN is blocked? | YES | Change PWB-A (PF-106), PWB-A (PF-108/PF-110), or PWB-A (Cassette Main Board), in that order. |
| | | | NO | Change RSEN. |
| | 4 | Check RCL for operation. Does the voltage across CN7A-4 on PWB-A (PF-106) and GND change from DC24V to DC0V when the Start key is pressed? | NO | Change PWB-A (PF-106), PWB-A (PF-108/PF-110), PWB-A (Cassette Main Board), or PWB-A, in that order. |
| | 5 | Check CL2 for operation. Does the voltage across CN9-1 on PWB-A and GND change from DC24V to DC0V when the Start key is pressed? | NO | Change PWB-A. |
| | 6 | ✻ If the 3rd Drawer is PF-106<br>Is PC2 fully operational? Check the input data using I/O Check. | YES | Check various parts for possible overload and, if they are okay, change RCL, CL2, or PWB-A, in that order. |
| | | | NO | Check the PC2 actuator for operation and, if it is intact, change PC2. |
| | 7 | ✻ If the 4th Drawer is PF-106<br>Is S3 fully operational? Check the input data using I/O Check. | YES | Check various parts for possible overload and, if they are okay, change RCL, CL2, or PWB-A, in that order. |
| | 8 | Does the voltage across PJ3A-2B on PWB-A (PF-108/PF-110) and GND change to DC0V when S3 is blocked and to DC5V when S3 is unblocked? | YES | Change PWB-A (PF-108/PF-110) or PWB-A (Cassette Main Board). |
| | | | NO | Check the S3 actuator for operation and, if it is intact, change S3. |

**(6) Duplex Turnover/Take-Up Misfeed**

| Relevant Electrical Parts | |
|---|---|
| Paper Exit Sensor PC3 | Duplex Unit Transport Motor M2 |
| Duplex Unit Transport Sensor PI1 | Manual Feed Paper Take-Up Clutch CL3 |
| Synchronizing Roller Sensor PC2 | Master Board PWB-A |
| Switchback Motor M1 | Duplex Main Board PWB-A |

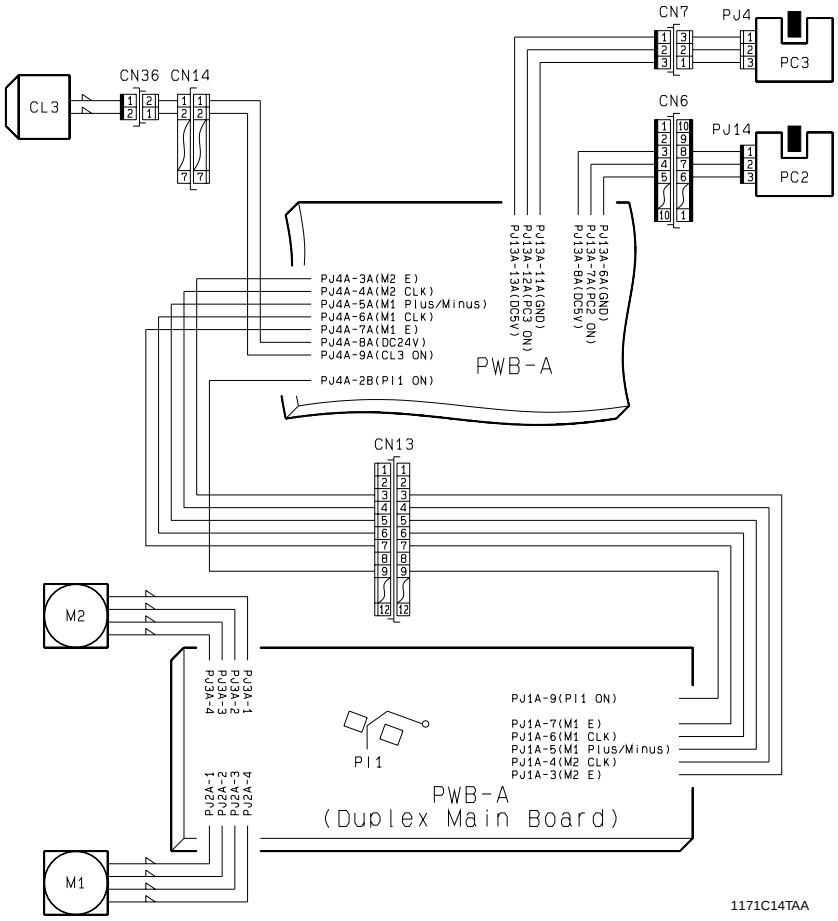

<Duplex Turnover/Take-Up Misfeed Troubleshooting Procedure>

| Symptom | Step | Check Item | Result | Action |
|---|---|---|---|---|
| Paper is at a stop near the exit section. | 1 | Is the Paper Exit Roller deformed, worn, or dirty with paper dust? | YES | Clean or change the Paper Exit Roller. |
| | 2 | Is PC3 fully operational? Check the input data using I/O Check. | NO | Check the PC3 actuator for operation and, if it is intact, change PC3. |
| | 3 | Check M1 for operation. Does the voltage across PJ1A-7 on PWB-A (Duplex Main Board) and GND change from DC5V to DC0V during a 2-sided copy cycle? | YES | Check gears for proper engagement. |
| | | | NO | Change PWB-A. |
| | 4 | Does the voltage across PJ1A-5 on PWB-A (Duplex Main Board) and GND change from DC5V to DC0V during a 2-sided copy cycle? | YES | Check various parts for possible overload and, if they are okay, change M1 or PWB-A (Duplex Main Board). |
| | | | NO | Change PWB-A. |
| Paper is at a stop inside the Duplex Unit. | 1 | Is the Duplex Unit Transport Roller or Roll deformed, worn, or dirty with paper dust? | YES | Clean or change the Duplex Unit Transport Roller or Roll. |
| | 2 | Is a torn piece of paper present on the paper path surface? | YES | Remove the torn piece of paper. |
| | 3 | Is the Manual Feed Take-Up Roller or Roll deformed, worn, or dirty with paper dust? | YES | Clean or change the Manual Feed Take-Up Roller or Roll. |
| | 4 | Check M2 for operation. Does the voltage across PJ1A-3 on PWB-A (Duplex Main Board) and GND change from DC5V to DC0V during a 2-sided copy cycle? | YES | Check gears for proper engagement. |
| | | | NO | Change PWB-A. |
| | 5 | Is PI1 fully operational? Check the input data using I/O Check. | NO | Check the PI1 actuator for operation and, if it is intact, change PWB-A (Duplex Main Board). |
| | 6 | Check CL3 for operation. Does the voltage across CN14-2 and GND change from DC24V to DC0V when paper is taken up from the Duplex Unit? | YES | Check various parts for possible overload and, if they are okay, change CL3 or M2. |
| | | | NO | Change PWB-A. |
| Paper is at a stop near the Synchronizing Rollers. | 1 | Is PC2 fully operational? Check the input data using I/O Check. | YES | Check various parts for possible overload and, if they are okay, change PWB-A. |
| | | | NO | Check the PC2 actuator for operation and, if it is intact, change PC2. |

# 4 MALFUNCTION

The copier CPU has a function that self-diagnoses the copier conditions. On detection of a malfunction, the corresponding code representing a particular malfunction name, location, and details as listed below is displayed on the Touch Panel together with a Tech. Rep. call message.

- Perform the following steps to reset the malfunction.

**Malfunction Resetting Procedure**

- Turn OFF, then ON the Power Switch or open and close the Side Cover for all malfunctions except fusing-related ones (C05✻✻).
- Use "Trouble Reset" of the "Initial" screen to reset all malfunctions including fusing-related ones (C05✻✻).

## 4-1. Detection Timing by Malfunction Code

| Code | Description | Detection Timing |
|---|---|---|
| C0000 | Main Motor M2 malfunction | The Lock signal remains HIGH for a continuous 1-sec. period or more while M2 remains energized. |
| C0010 | I/C Motor M1 malfunction | The Lock signal remains HIGH for a continuous 1-sec. period or more while M1 remains energized. |
| C0045 | Fusing Cooling Fan Motor M3 malfunction | The Lock signal remains HIGH or LOW for a continuous 1-sec. period or more while M3 remains energized. |
| C004C | Ozone Fan Motor M8 malfunction | The Lock signal remains HIGH or LOW for a continuous 1-sec. period or more while M8 remains energized. |
| C004E | Power Unit Cooling Fan Motor M4 | The Lock signal (analog input voltage) remains 0.4V or less for a continuous 0.5-sec. period or more while M4 remains energized. |
| C0070 | Main Hopper Toner Replenishing Motor M6 malfunction | • Toner Bottle Home Position Sensor PC10 remains blocked (L) for a continuous 2-sec. period or more while M6 remains energized.<br>• PC10 remains unblocked (H) for a continuous 6-sec. period or more while M6 remains energized. |
| C0050 | Warming-up failure | The temperature of the Fusing Rollers do not reach the required level even after the lapse of a given period of time during a warming-up cycle.<br>• From room temperature to 100°C: Within 65 sec.<br>• From 100°C to 140°C: Within 25 sec.<br>• From 140°C to 170°C: Within 20 sec.<br>• From 170°C to the completion of warming-up: Within 22 sec. |
| C0510 | Abnormally low fusing temperature | • The fusing temperature remains 130°C or less for a continuous 0.1-sec. period or more during the standby state or printing.<br>• The fusing temperature remains 105°C or less for a continuous 2-min. period or more during the low-temperature standby state. |
| C0520 | Abnormally high fusing temperature | The fusing temperature remains 230°C or more for a continuous 0.1-sec. period or more. |

| Code | Description | Detection Timing |
|---|---|---|
| C0650 | Faulty Scanner Home Position Sensor 1 PC12 | <The Power Switch is turned ON, Original Cover lowered, or Start key pressed when the Scanner is at its home position><br>• PC12 is not unblocked (H) even when the Scanner moves 10 mm to the left.<br>• PC12 is not blocked (L) even when the Scanner moves 4 mm to the right after PC12 has been unblocked (H).<br><The Power Switch is turned ON, Original Cover lowered, or Start key pressed when the Scanner is at any position other than home><br>• PC12 is not blocked (L) even when the Scanner moves 469.5 mm to the right. |
| C0651 | Faulty Scanner Home Position Sensor 2 PC13 | When the Start key is pressed with a document loaded in the Document Feed Tray of AF-7, PC13 is not blocked (L) even when the Scanner moves 463 mm to the left after PC12 has been unblocked (H). |
| C0990 | LCC Lift-Up Motor EMOT malfunction (PF-106) | ✻ See option service manual. |
| C0991 | Lift 1 ascent motion failure (PF-106) | |
| C0995 | LCC Transport Motor HMOT malfunction (PF-106) | |
| C0999 | Lift 2 ascent motion failure (PF-106) | |
| C099D | Communications error (PF-106) | |
| C0B00 | Transport Motor M1 drive malfunction (FN-100/FN-500) | |
| C0B0F | Paper Entrance Switching Motor M1 drive malfunction (FN-100/FN-500) | |
| C0B30 | CD Aligning Motor M4 drive malfunction (FN-100/FN-500) | |
| C0B38 | Shift Motor M5 drive malfunction (FN-100/FN-500) | |
| C0B4D | Paper Holding Tray Motor M10 drive malfunction (FN-100/FN-500) | |
| C0B4E | Finisher Tray Motor M8 drive malfunction (FN-100/FN-500) | |
| C0B50 | Stapling Motor drive malfunction (FN-100/FN-500) | |
| C0BA0 | Elevator Motor M9 drive malfunction (FN-100/FN-500) | |
| C0F32 | Faulty ATDC Sensor E1 | The value of data read by E1 is faulty. [E1 reading is 7% or less (3.92V or more) or 19% or more (1.41V or less).] |

| Code | Description | Detection Timing |
|---|---|---|
| C0F33 | ATDC adjustment failure | • In an F8 (ATDC control voltage automatic adjustment) operation, the adjustment of ATDC control voltage is not completed within 1 min. after E1 sampling.<br>• In an F8 operation, the control voltage falls outside the range of 5.39V to 8.15V. |
| C1038 | Engine connection error | • The system fails in checking initial engine connection when Power Switch S1 is turned ON.<br>• The system succeeded in checking initial connection when S1 was turned ON; then it fails in rechecking initial connection through the execution of a software reset when a communications error occurs during operation. |
| C1300 | Polygon Motor M10 malfunction | <Resolution selection failure detection><br>• The Lock signal is not detected for a given period of time after the resolution has been selected. (The Lock signal is not, however, detected for 1 sec. after the start.)<br><Faulty Lock signal detection><br>• No Lock signals are detected for the 1-sec. period which starts 1 sec. after the first Lock.<br>✻ First Lock: The first Lock signal following 1 sec. after the selection of start or half speed.<br><Out-of-timing Lock detection><br>• The Lock signal is not detected for a continuous 0.5-sec. period while M10 is in the stabilized turning state (after a Lock has been detected).<br><Abnormal Lock detection><br>• The Lock signal remains ON for a continuous 5-sec. period while M10 remains deenergized. |
| C133A | Communications error (G/A) | ——————————————————— |
| C133B | Communications error (option I/F) | ——————————————————— |
| C13C0 | I/C initialization failure | After failing to blow the imaging cartridge fuse 2 consecutive times, 3.6V or more is detected and the I/C is determined to be new. |
| C13D0 | Faulty EEPROM | No initial data is written in EEPROM. |
| C13F0 | HSYNC detection failure | • The SOS rising edge is not detected even after the lapse of 0.2 sec. after Polygon Motor M10 has started and laser output started.<br>• No SOS rising edges are detected while VIA remains ON. |

## 4-2. Troubleshooting Procedures by Malfunction Code

**(1) C0000: M2 Malfunction**
**C0010: M1 Malfunction**
**C0045: M3 Malfunction**
**C004C: M8 Malfunction**
**C004E: M4 Malfunction**
**C0070: M6 Malfunction**

| Relevant Electrical Parts | |
|---|---|
| I/C Motor M1 | Main Hopper Toner Replenishing Motor M6 |
| Main Motor M2 | Ozone Fan Motor M8 |
| Fusing Cooling Fan Motor M3 | Toner Bottle Home Position Sensor PC10 |
| Power Unit Cooling Fan Motor M4 | Master Board PWB-A |

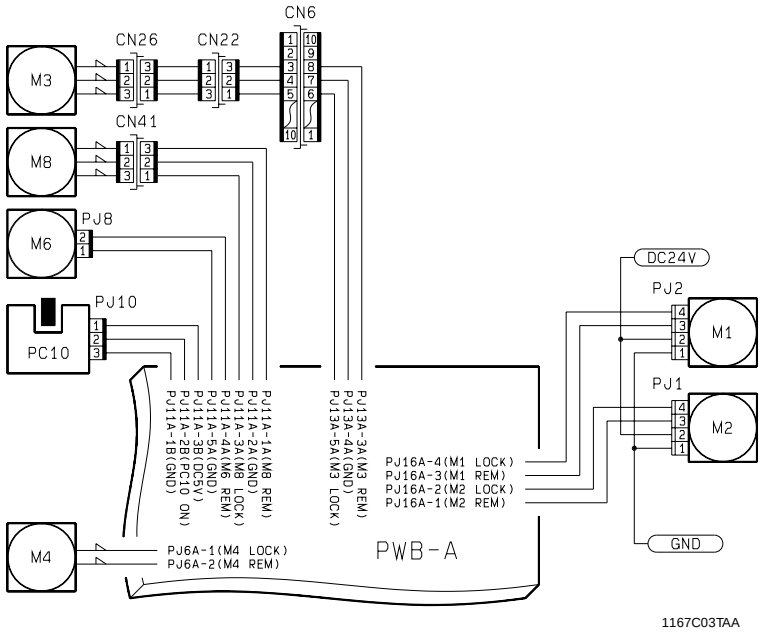

C0000

| Step | Check Item | Result | Action |
|---|---|---|---|
| 1 | Does M2 turn after the malfunction has been reset? | NO | Check various parts for possible overload. |
| 2 | Check M2 for operation.<br>Does the voltage across PJ1-3 of M2 and GND change from DC5V to DC0V after the malfunction has been reset? | NO | Change PWB-A. |
| 3 | Does the voltage across PJ1-4 of M2 and GND change from DC5V to DC0V after the malfunction has been reset? | YES | Change PWB-A. |
| | | NO | Change M2. |

C0010

| Step | Check Item | Result | Action |
|---|---|---|---|
| 1 | Does M1 turn after the malfunction has been reset? | NO | Check various parts for possible overload. |
| 2 | Check M1 for operation.<br>Does the voltage across PJ2-3 of M1 and GND change from DC5V to DC0V after the malfunction has been reset? | NO | Change PWB-A. |
| 3 | Does the voltage across PJ2-4 of M1 and GND change from DC5V to DC0V after the malfunction has been reset? | YES | Change PWB-A. |
| | | NO | Change M14. |

C0045

| Step | Check Item | Result | Action |
|---|---|---|---|
| 1 | Does M3 turn after the malfunction has been reset? | NO | Check the connector and harness between M3 and PWB-A. |
| 2 | Check M3 for operation.<br>Does the voltage across CN6-8 on the PWB-A side and GND change from DC0V to DC24V after the malfunction has been reset? | NO | Change PWB-A. |
| 3 | Does the “C0045” display persist even after M3 has been replaced with a new one? | YES | Change PWB-A. |

C004C

| Step | Check Item | Result | Action |
|---|---|---|---|
| 1 | Does M8 turn after the malfunction has been reset? | NO | Check various parts for possible overload. |
| 2 | Check M8 for operation.<br>Does the voltage across CN41-3 on the PWB-A side and GND change from DC0V to DC24V after the malfunction has been reset? | NO | Change PWB-A. |
| 3 | Does the “C004C” display persist even after M8 has been replaced with a new one? | YES | Change PWB-A. |

C004E

| Step | Check Item | Result | Action |
|---|---|---|---|
| 1 | Does M4 turn after the malfunction has been reset? | YES | Change PWB-A. |
| 2 | Does the “C004E” display persist even after M4 has been replaced with a new one? | YES | Change PWB-A. |

C0070

| Step | Check Item | Result | Action |
|---|---|---|---|
| 1 | After the malfunction has been reset, remove the Rear Lower Cover and block Toner Bottle Cover Sensor PC11. Then, unlocking the Toner Bottle Lock Lever, turn the Toner Bottle a half turn by hand. Does the Toner Bottle turn when PC11 is unblocked (H) with the Toner Bottle Lock Lever kept unlocked? | YES | Perform step 3. |
| | | NO | Check various parts for possible overload. |
| 2 | Does the voltage across PJ8-2 of M6 and GND change from DC0V to DC24V when step 1 is performed again? | YES | Change M6. |
| | | NO | Change PWB-A. |
| 3 | Is PC10 fully operational?<br>Check the input data using I/O Check. Does the input signal value for “Toner Bottle Set” change between “0” and “1” when the Toner Bottle is turned by hand? | YES | Change PWB-A. |
| | | NO | Change PC10. |

**(2) C0500: Warming-up Failure**
**C0510: Abnormally Low Fusing Temperature**
**C0520: Abnormally High Fusing Temperature**

| Relevant Electrical Parts | |
|---|---|
| Fusing Roller Heater Lamp H1 | Fusing Roller Heater Lamp Fuse TF1 |
| Fusing Roller Thermistor TH1 | Side Cover Interlock Switch 2 S3 |
| Fusing Roller Thermostat TS1 | Power Supply Unit 1 PU1 |
| | Master Board PWB-A |

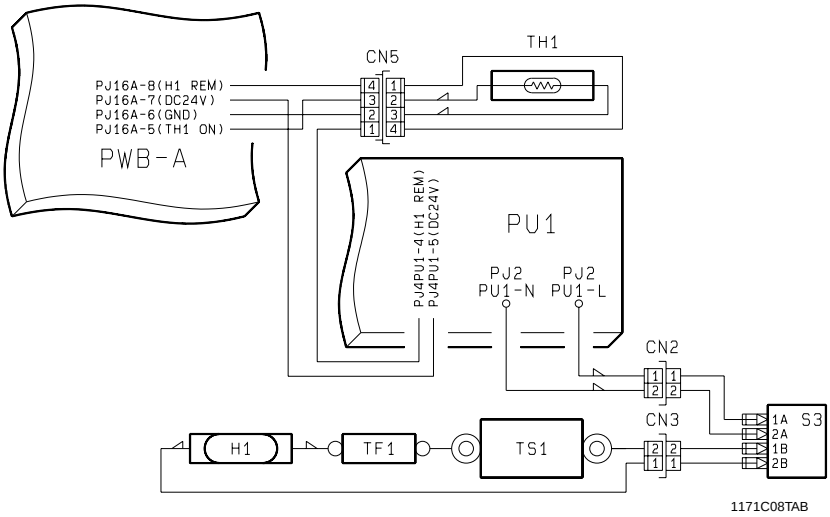

C0500, C0510

| Step | Check Item | Result | Action |
|---|---|---|---|
| 1 | Does H1 turn ON after the malfunction is reset? | YES | Check TH1 for contamination or installation. |
| 2 | Is there continuity across CN3-1 and 2 on the Fusing Unit end with CN3 (2P) disconnected? | NO | Check H1, TS1, and TF1 for continuity. |
| 3 | Is there continuity across 1A and 1B, and across 2A and 2B, of S3 when S3 is turned ON? | NO | Change S3. |
| 4 | Is the resistance of TH1 (across CN5-2 and 3 on the Fusing Unit end) infinity? | YES | Change TH1. |
| 5 | Is Fuse F2 on PU1 conducting? | YES | Change PU1 or PWB-A. |
| | | NO | Change the fuse. |

C0520

| Step | Check Item | Result | Action |
|---|---|---|---|
| 1 | Is TH1 installed properly? | NO | Install TH1 correctly. |
| 2 | Is TH1 dirty? | YES | Clean or change TH1. |
| 3 | Is the circuit across CN5-2 and 3 on the Fusing Unit end closed when CN5 (4P) is disconnected? | YES | Change TH1. |
| | | NO | Change PWB-A or PU1. |

**(3) C0650: Faulty PC12**
**C0651: Faulty PC13**

| Relevant Electrical Parts | |
|---|---|
| Scanner Home Position Sensor 1 PC12 | BCR Board BCR |
| Scanner Home Position Sensor 2 PC13 | HGB Board HGB |
| Scanner Motor M5 | MFB Board UN2 |
| Master Board PWB-A | |

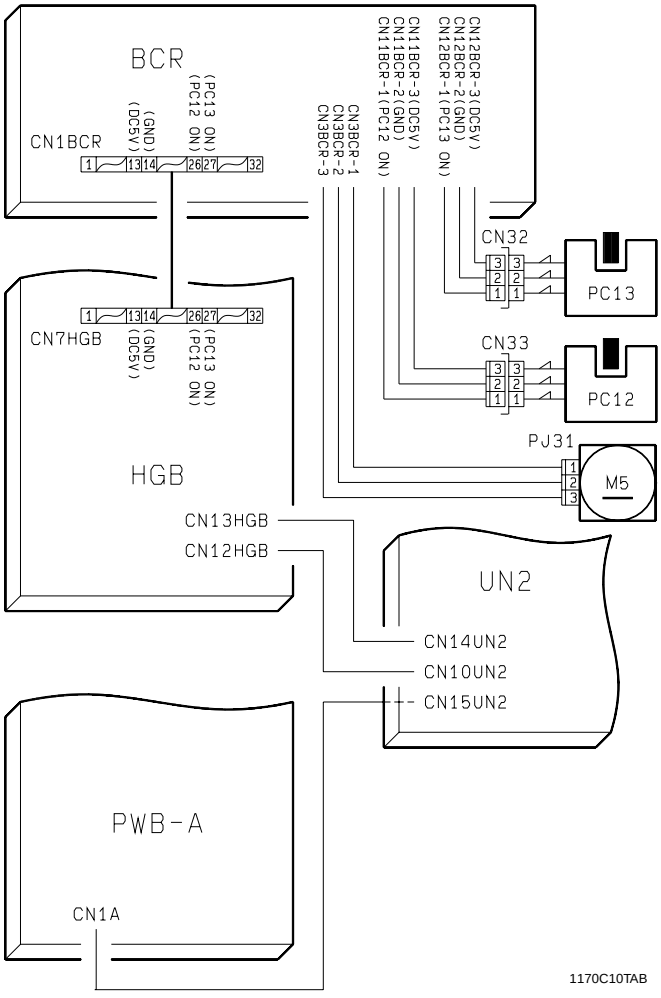

C0650, C0651

| Step | Check Item | Result | Action |
|---|---|---|---|
| 1 | Is M5 energized?<br>Select the following functions in this order: Tech. Rep. Mode → Movement Check → Scanner. Then, enter an appropriate value in “Absolute Position” or “Relative Position” and energize M5. | NO | Check various parts for possible overload and, if they are okay, change M5, BCR, HGB, UN2, or PWB-A, in that order. |
| 2 | Is “C0650” being displayed? | YES | Perform steps 3 and 4. |
| | | NO | Perform steps 5 and 6. |
| 3 | Does the voltage across CN11BCR-1 on BCR and GND change from DC0V to DC5V when step 1 is performed a second time and PC12 is unblocked? | NO | Change PC12. |
| 4 | Does the voltage across CN1BCR-26 on BCR and GND change from DC0V to DC5V when step 3 is performed a second time? | YES | Change HGB, UN2, or PWB-A, in that order. |
| | | NO | Change BCR. |
| 5 | Does the voltage across CN12BCR-1 on BCR and GND change from DC5V to DC0V when step 1 is performed a third time and PC13 is unblocked? | NO | Change PC13. |
| 6 | Does the voltage across CN1BCR-27 on BCR and GND change from DC0V to DC5V when step 5 is performed a second time? | YES | Change HGB, UN2, or PWB-A, in that order. |
| | | NO | Change BCR. |

**(4) C0990: EMOT Malfunction**
**C0991: Lift 1 Ascent Motion Failure**
**C0995: HMOT Malfunction**
**C0999: Lift 2 Ascent Motion Failure**
**C099D: Communications Error**

| Relevant Electrical Parts | |
|---|---|
| LCC Lift-Up Motor EMOT | LCC Main Board PWB-A: PF-106 |
| Lift-Up Sensor 1 LS1 | Cassette Main Board PWB-A: PF-108/PF-110 |
| Lift-Up Sensor 2 LS2 | Cassette Main Board PWB-A |
| LCC Transport Motor HMOT | Master Board PWB-A |

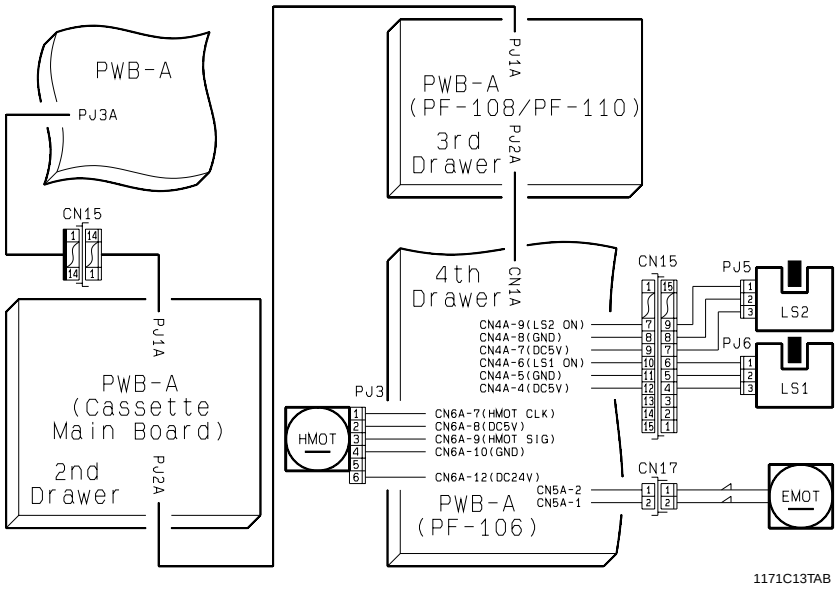

C0990

| Step | Check Item | Result | Action |
|---|---|---|---|
| 1 | Does “C0990” reappear even after EMOT has been replaced with a new one? | YES | Change PWB-A (PF-106), PWB-A (PF-108/PF-110), PWB-A (Cassette Main Board), or PWB-A, in that order. |

C0991

| Step | Check Item | Result | Action |
|---|---|---|---|
| 1 | Is LS1 fully operational? Check the input data using I/O Check. | YES | Perform step 3 and onward. |
| 2 | Does the voltage across CN4A-6 on PWB-A (PF-106) and GND change to DC5V when LS1 is blocked and to DC0V when LS1 is unblocked? | YES | Change PWB-A (PF-106), PWB-A (PF-108/PF-110), or PWB-A (Cassette Main Board), in that order. |
| | | NO | Change LS1. |
| 3 | Does EMOT turn when a drawer loaded with paper is slid into the copier? | YES | Check gears and couplings for proper engagement and, if they are okay, change PWB-A. |
| 4 | Does the voltage across CN5A-1 on PWB-A (PF-106) and GND change from DC0V to DC24V when step 3 is performed again? | YES | Check various parts for possible overload and, if they are okay, change EMOT. |
| | | NO | Change PWB-A (PF-106), PWB-A (PF-108/PF-110), PWB-A (Cassette Main Board), or PWB-A, in that order. |

C0995

| Step | Check Item | Result | Action |
|---|---|---|---|
| 1 | Does “C0995” reappear even after HMOT has been replaced with a new one? | YES | Change PWB-A (PF-106), PWB-A (PF-108/PF-110), PWB-A (Cassette Main Board), or PWB-A, in that order. |

C0999

| Step | Check Item | Result | Action |
|---|---|---|---|
| 1 | Is LS2 fully operational? Check the input data using I/O Check. | YES | Perform step 3 and onward. |
| 2 | Does the voltage across CN4A-9 on PWB-A (PF-106) and GND change to DC5V when LS2 is blocked and to DC0V when LS2 is unblocked? | YES | Change PWB-A (PF-106), PWB-A (PF-108/PF-110), or PWB-A (Cassette Main Board), in that order. |
| | | NO | Change LS2. |
| 3 | Does EMOT turn when a drawer loaded with paper is slid into the copier? | YES | Check gears and couplings for proper engagement and, if they are okay, change PWB-A. |
| 4 | Does the voltage across CN5A-1 on PWB-A (PF-106) and GND change from DC0V to DC24V when step 3 is performed again? | YES | Check various parts for possible overload and, if they are okay, change EMOT. |
| | | NO | Change PWB-A (PF-106), PWB-A (PF-108/PF-110), PWB-A (Cassette Main Board), or PWB-A, in that order. |

C099D

| Step | Check Item | Result | Action |
|---|---|---|---|
| 1 | Does “C099D” reappear even after PWB-A (PF-106) has been replaced with a new one? | YES | Change PWB-A (PF-108/PF-110), PWB-A (Cassette Main Board), or PWB-A, in that order. |

**(5) C0F32: Faulty E1**
**C0F33: ATDC Adjustment Failure**

| Relevant Electrical Parts | |
|---|---|
| ATDC Sensor E1 | Master Board PWB-A |

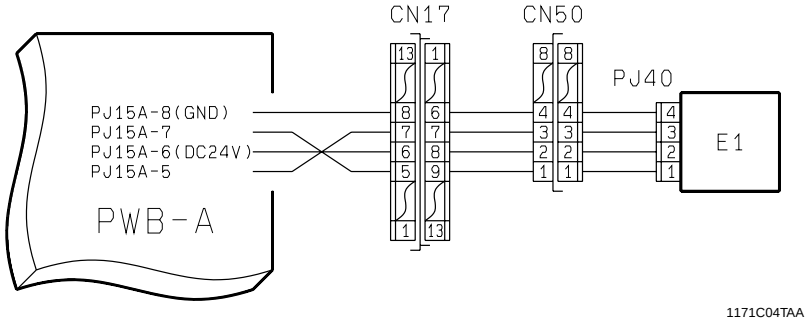


C0F32, C0F33

| Step | Check Item | Result | Action |
|---|---|---|---|
| 1 | Are PJ40, CN50, CN17, and PWB-A PJ15A connected properly? | NO | Connect them properly. |
| 2 | Is the CN50 connection dirty? | YES | Clean. |
| 3 | Is “C0F32” or “C0F33” displayed even when an I/C with the same T/C as that of a new one has been installed? | NO | Change the I/C with a new one. |
| 4 | Is “C0F32” or “C0F33” displayed even when an I/C with the same T/C as that of a new one has been installed and an F8 operation run? (Be sure to record the ATDC control voltage setting value if an F8 operation is to be run.) | YES | Change PWB-A, install the old I/C, and return the ATDC control voltage setting to the value recorded. If “C0F32” or “C0F33” redisplayed, change the I/C with a new one. |
| | | NO | Change the I/C with a new one. |

**(6) C10✻✻ to C13✻✻**

- These malfunctions are concerned with faulty symptoms as they relate to software, hardware, and communications. For remedial actions, change the board, check for cable connections, and turn the Power Switch OFF and ON.

| Code | Action |
|---|---|
| C1038 | 1. Check the connection between PWB-A and UN2, reset the malfunction, and turn OFF and ON the Power Switch.<br>2. If the same malfunction persists, change PWB-A or UN2. |
| C1300 | 1. Reset the malfunction and turn OFF and ON the Power Switch.<br>2. If the same malfunction persists, check the harnesses and PJs between UN3, PH Unit, and PWB-A and, if they are intact, change UN3, PH Unit, or PWB-A, in that order. |
| C133A | 1. Reset the malfunction and turn OFF and ON the Power Switch.<br>2. If the same malfunction persists, check the connection between the copier PWB-A and A to E below:<br>A. 2nd Drawer paper source unit<br>B. 3rd Drawer paper source unit (PF-108/PF-110/PF-106)<br>C. 4th Drawer paper source unit (PF-108/PF-110/PF-106)<br>D. 5th Drawer paper source unit (PF-108/PF-110)<br>E. Job Tray (JS-200)<br>3. If the connection is made properly, unplug the connector between the copier and A to E and turn OFF and ON the Power Switch.<br>→If the malfunction code display persists, change the copier PWB-A.<br>→If the malfunction is no longer detected, connect the connectors sequentially and turn OFF and ON the Power Switch. When “C133A” is detected, check the connector of the corresponding paper source unit and, if it is intact, change the PWB-A of the unit. |
| C133B | 1. Reset the malfunction and turn OFF and ON the Power Switch.<br>2. If the same malfunction persists, check the connection between the copier PWB-A and Finisher PWB-A.<br>3. If the connection is made properly, unplug the connector between the copier and Finisher and turn OFF and ON the Power Switch.<br>→If the malfunction code display persists, change the copier PWB-A.<br>→If the malfunction is no longer detected, check the connector and, if it is intact, change the Finisher PWB-A. |
| C13C0 | 1. Reset the malfunction, turn OFF and ON the Power Switch, and reinstall the I/C.<br>2. If the malfunction is detected again, check the terminal block for the I/C fuse and HV1 and, if it is intact, change HV1 or PWB-A. |
| C13D0 | 1. Reset the malfunction, turn OFF and ON the Power Switch, and unplug the power cord and plug it back in.<br>2. If the malfunction is detected again, check the connection between IC3 on PWB-A and the EEPROM and, if it is good, change PWB-A.<br>3. If the malfunction is still detected, change the EEPROM.<br>✻ For the precautions to be observed when replacing the EEPROM, see DIS/REASSEMBLY, ADJUSTMENT. |
| C13F0 | 1. Reset the malfunction and turn OFF and ON the Power Switch.<br>2. If the same malfunction persists, check the harnesses and PJs between UN3, PH Unit, and PWB-A and, if they are intact, change UN3, PH Unit, or PWB-A, in that order. |

**(7) The Copier Does not Turn ON.**

| Relevant Electrical Parts | |
|---|---|
| Power Switch S1 | Master Board PWB-A |
| Side Cover Interlock Switch 1 S2 | Control Panel UN1 |
| Power Supply Unit 1 PU1 | MFB Board UN2 |
| Power Supply Unit 2 PU2 | |

| Symptom | Step | Check Item | Result | Action |
|---|---|---|---|---|
| Power does not turn ON. | 1 | Is there an AC power supply voltage across PJ1PU1-1 and 3 on PU1 when S1 is turned ON? | NO | Check S1, PU1 fuse, and power supply voltage. |
| | 2 | Is the voltage across PJ5PU1-10 and GND DC5V when S1 is turned ON? | YES | Check the fuse on PWB-A. |
| | | | NO | Change PU1. |
| | 3 | Is the voltage across PJ5PU1-4 and GND DC24V when S1 is turned ON? | NO | Change PU1. |
| | 4 | Is the voltage across PJ5PU1-3 and GND DC24V when S1 is turned ON? | NO | Change PU1. |
| | 5 | Does the voltage across the S2 connector (yellow) and GND change from DC0V to DC24V when S2 is turned ON? | NO | Check S2. |
| | 6 | Is the voltage across PJ7PU1-9 on PU1 and GND DC3.3V? | NO | Change PU1. |
| | 7 | Is the voltage across CN1PU2-1 on PU2 and GND DC24V? | NO | Change PU1. |
| | 8 | Is the voltage across CN28UN2-8 on UN2 and GND DC-12V? | NO | Change PU2. |
| | 9 | Is the voltage across CN28UN2-7 on UN2 and GND DC12V? | YES | Change PWB-A. |
| | | | NO | Change PU2. |
| The control panel indicates nothing. | 1 | Is DC24V being output from UN2 to UN1?<br>Disconnect CN1UN1 of UN1 and check to see if the voltage across CN1UN1-1 on the harness side and GND is DC24V. | NO | Change UN2. |
| | 2 | Is DC5V being output from UN2 to UN1?<br>Disconnect CN1UN1 of UN1 and check to see if the voltage across CN1UN1-28 on the harness side and GND, and across CN1UN1-29 and GND, is DC5V. | YES | Change UN1. |
| | | | NO | Change UN2. |

# 5 IMAGE FAILURE

## 5-1. Image Failure Troubleshooting

Image failures have many possible causes. For troubleshooting, it is necessary to determine whether a failure is attributable to:
1. A basic cause or any other cause
2. The input system (IR) or output system (engine).

In this chapter, troubleshooting is divided into “initial checks” and “troubleshooting procedures classified by image failures.” If an image failure has occurred, first make the initial checks, then proceed to the corresponding image failure troubleshooting procedure.

## 5-2. Initial Checks

1. Place of installation
- Is the source voltage normal? Does the voltage vary greatly?
- Is the copier installed in a hot, humid place where temperature varies sharply?
- Is the copier installed in a dusty place?
- Is the copier subjected to direct sunlight?
- Is the copier level?

2. Copy paper
- Is the recommended paper used?
- Is the paper damp?
- Does the paper size set in the paper source match the size of the paper loaded in it?

3. Original
- Is the original written in light pencil?
  → Use the test chart to check the image.
- Is the original transparent, or are transparencies being used?
  → Place a blank sheet of paper over the original and make a copy.
- Is the Original Glass dirty or scratched?
  → Clean a dirty glass, or replace a scratched one.

4. Adjust data and Level History data
- Do the values set for “Adjust” and “Level History” fall within the specified range?

5. PM parts (supplies)
- Have the PM parts (supplies), such as the PC Drum, Cleaning Blade, and other parts that affect image quality, reached the end of their cleaning or replacement cycle?
- Are two or more imaging cartridges being used alternately?

6. Adjustment items (registration, focus, etc.)
- Among the adjustment items given in DIS/REASSEMBLY, ADJUSTMENT, is there any adjustment that may remedy the image failure?

7. Input system (IR) or output system (engine)?
- Run “F12” which can be selected as follows: Tech. Rep. Mode → Function.
- If the test pattern output has the same problem as the copy image:
  → Check the output system.
- If the test pattern output is normal:
  → Check the input system.
- Make a copy at a different zoom ratio.

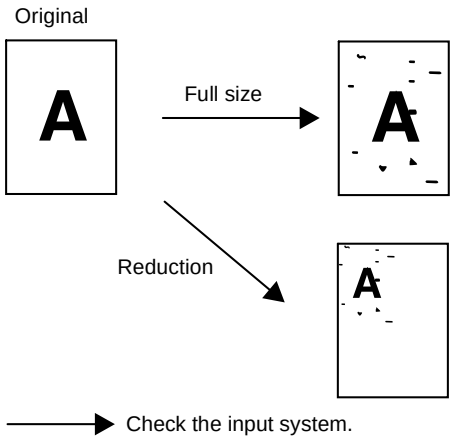


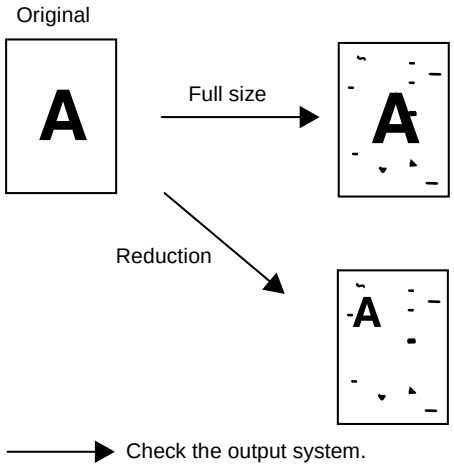


1167T020AB

## 5-3. Troubleshooting Procedures by Image Failure

<Image Failure Samples>

1. Blank copy

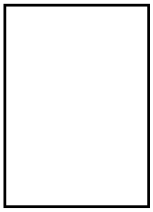

2. Black copy

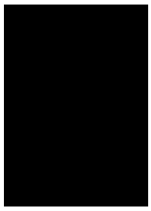

3. Low image density

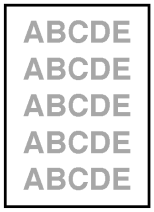


4. Foggy background

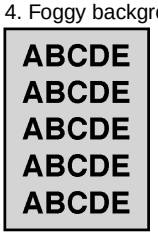


5. Black streaks or bands

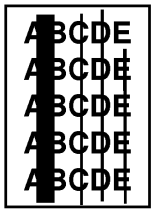

6. Black spots

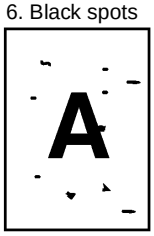


7. Blank streaks or bands

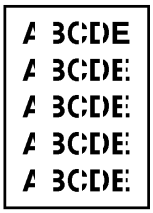

8. Void areas

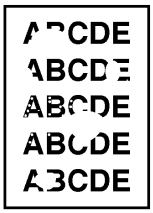

9. Smear on back

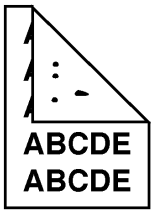


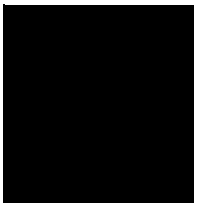

10. Uneven image density

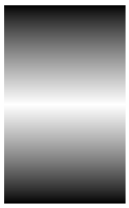

11. Gradation reproduction failure

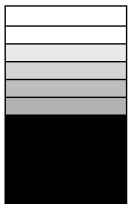

12. Rough image




13. Periodically uneven image



1167T017AA

**(1) Blank Copy**

| Section | Step | Check Item | Result | Action |
|---|---|---|---|---|
| Engine | 1 | Is toner empty? | YES | Check Sub Hopper Toner Empty Switch S4 and change the Toner Bottle. |
| | 2 | Is the drive transmission mechanism to the Developing Unit in good condition? | NO | Check and change as necessary. |
| | 3 | Is the image transfer current terminal intact? | NO | Check and change as necessary. |
| | 4 | Does the laser shutter (the one located on the laser beam path between the PH Unit and PC Drum) open and close properly? | NO | Adjust so that the shutter opens and closes properly. |
| | 5 | Does the I/C Shutter open and close properly? | YES | Change HV1, PH Unit, or PWB-A, in that order. |
| | | | NO | Adjust so that the shutter opens and closes properly. |
| IR | 1 | Is the Scanner drive transmission mechanism in good condition? | NO | Check and change as necessary. |
| | 2 | Do the connections from CCD to HGB remain intact? | NO | Reconnect. |
| | 3 | Do the connections from HGB to UN2 remain intact? | YES | Change CCD, HGB, or UN2, in that order. |
| | | | NO | Reconnect. |

**(2) Black Copy**

| Section | Step | Check Item | Result | Action |
|---|---|---|---|---|
| Engine | 1 | Is the PC Drum charge voltage terminal in good condition? | NO | Check and change as necessary. |
| | 2 | Is the grid voltage terminal in good condition? | NO | Check and change as necessary. |
| | 3 | Is the developing bias terminal in good condition? | NO | Check and change as necessary. |
| | 4 | Does a black copy persist even after the I/C has been replaced with a new one? | YES | Change HV1 or PWB-A. |
| IR | 1 | Does the Exposure Lamp turn ON when "ON" is selected for "Lighting Exposure Lamp"? "Lighting Exposure Lamp" can be selected as follows: Tech. Rep. Mode → Movement Check → Scanner. | YES | Perform steps 4 and onward. |
| | | | NO | Check connectors and harnesses and perform steps 2 and 3. |
| | 2 | Does the voltage across CN13BCR-1 on BCR and GND change from DC24V to DC0V when step 1 is performed again? | NO | Change BCR, HGB, or UN2, in that order. |
| | 3 | Is an AC voltage output from INV to Exposure Lamp when step 1 is performed again? | YES | Change LA2. |
| | | | NO | Change INV. |
| | 4 | Are the mirrors and lens installed properly? | NO | Install them properly. |
| | 5 | Are the mirrors and lens dirty? | YES | Clean or change. |

**(3) Low Image Density**

| Section | Step | Check Item | Result | Action |
|---|---|---|---|---|
| Engine | 1 | Does the image get better when a copy is made with new paper loaded? | YES | Change the paper. Instruct the user on the storage of paper. |
| | 2 | Is toner empty? | YES | Check Sub Hopper Toner Empty Switch S4 and change the Toner Bottle. |
| | 3 | Is the image transfer current terminal intact? | NO | Check and change as necessary. |
| | 4 | Is the developing bias terminal intact? | NO | Check and change as necessary. |
| | 5 | Does the image density remain low even after the I/C has been replaced with a new one? | NO | This completes the procedure. |
| | 6 | Does the image density become higher when the “Image Density” value is changed toward the plus side? “Image Density” can be selected as follows: Tech. Rep. Mode → Tech. Rep. Choice → Printer. | YES | This completes the procedure. |
| | 7 | Does the image density become higher when the “VG Adjust” value is changed toward the plus side? “VG Adjust” can be selected as follows: Tech. Rep. Mode → Tech. Rep. Choice → Printer. | YES | This completes the procedure. |
| | | | NO | Change HV1, HGB, or UN2, in that order. |
| IR | 1 | Do the connections from CCD to HGB remain intact? | NO | Reconnect. |
| | 2 | Do the connections from HGB to UN2 remain intact? | YES | Change CCD, HGB, or UN2, in that order. |
| | | | NO | Reconnect. |

**(4) Foggy Background**

| Section | Step | Check Item | Result | Action |
|---|---|---|---|---|
| ___ | 1 | Is sunlight or any other extraneous light entering the copier? | YES | Protect the copier from extraneous light. |
| Engine | 1 | Is the PC Drum dirty with foreign matter? | YES | Clean the PC Drum. |
| | 2 | Is the PC Drum charge voltage terminal in good condition? | NO | Check and change as necessary. |
| | 3 | Is the grid voltage terminal in good condition? | NO | Check and change as necessary. |
| | 4 | Is the developing bias terminal in good condition? | NO | Check and change as necessary. |
| | 5 | Is the Charge Neutralizing Sheet voltage terminal in good condition? | NO | Check and change as necessary. |
| | 6 | Is Eraser Lamp LA1 dirty? | YES | Clean. |
| | 7 | Does foggy background persist even after the I/C has been replaced with a new one? | NO | This completes the procedure. |
| | 8 | Does foggy background persist when the “Image Density” value is changed toward the minus side? “Image Density” can be selected as follows: Tech. Rep. Mode → Tech. Rep. Choice → Printer. | NO | This completes the procedure. |
| | 9 | Does foggy background persist when the “VG Adjust” value is changed toward the minus side? “VG Adjust” can be selected as follows: Tech. Rep. Mode → Tech. Rep. Choice → Printer. | YES | Change HV1, PH Unit, or PWB-A, in that order. |
| | | | NO | This completes the procedure. |
| IR | 1 | Are the mirrors and lens dirty? | YES | Clean or change. |
| | 2 | Is the Exposure Lamp dirty or deteriorated? | YES | Clean or change. |
| | 3 | Do the connections between the Exposure Lamp and INV remain intact? | NO | Reconnect. |
| | 4 | Do the connections from INV to BCR remain intact? | NO | Reconnect. |
| | 5 | Do the connections from BCR to HGB remain intact? | NO | Reconnect. |
| | 6 | Do the connections from HGB to UN2 remain intact? | YES | Change INV, BCR, HGB, or UN2, in that order. |
| | | | NO | Reconnect. |

**(5) Black Streaks or Bands**

| Section | Step | Check Item | Result | Action |
|---|---|---|---|---|
| Engine | 1 | Is the PC Drum dirty? | YES | Clean the PC Drum. |
| | 2 | Has toner spilled from the I/C inside of the copier? | YES | Clean the interior and change I/C. |
| | 3 | Is the PC Drum charge voltage terminal in good condition? | NO | Check and change as necessary. |
| | 4 | Is the grid voltage terminal in good condition? | NO | Check and change as necessary. |
| | 5 | Are the Fusing Rollers dirty with foreign matter? | YES | Clean or change the Fusing Rollers. |
| | | | NO | Change I/C. |
| IR | 1 | Are the mirrors, lens, and Original Glass dirty with foreign matter? | YES | Clean the mirrors, lens, and Original Glass. |
| | 2 | Do the connections from CCD to HGB remain intact? | NO | Reconnect. |
| | 3 | Do the connections from HGB to UN2 remain intact? | YES | Change CCD, HGB, or UN2, in that order. |
| | | | NO | Reconnect. |

**(6) Black Spots**

| Section | Step | Check Item | Result | Action |
|---|---|---|---|---|
| Engine | 1 | Is the PC Drum dirty? | YES | Clean the PC Drum. |
| | 2 | Has toner spilled from the I/C inside of the copier? | YES | Clean the interior and change I/C. |
| | 3 | Is the PC Drum charge voltage terminal in good condition? | NO | Check and change as necessary. |
| | 4 | Is the grid voltage terminal in good condition? | NO | Check and change as necessary. |
| | 5 | Are the Fusing Rollers dirty with foreign matter? | YES | Clean or change the Fusing Rollers. |
| | | | NO | Change I/C. |
| IR | 1 | Are the mirrors, lens, and Original Glass dirty with foreign matter? | YES | Clean the mirrors, lens, and Original Glass. |
| | 2 | Do the connections from CCD to HGB remain intact? | NO | Reconnect. |
| | 3 | Do the connections from HGB to UN2 remain intact? | YES | Change CCD, HGB, or UN2, in that order. |
| | | | NO | Reconnect. |

**(7) Blank Streaks or Bands**

| Section | Step | Check Item | Result | Action |
|---|---|---|---|---|
| Engine | 1 | Is the PC Drum dirty with foreign matter? | YES | Clean the PC Drum. |
| | 2 | Is the image transfer current terminal intact? | YES | Check and change as necessary. |
| | 3 | Is the Image Transfer Roller dented or scratched? | YES | Change the Image Transfer Roller. |
| | 4 | Are the Fusing Rollers scratched or dirty? | YES | Clean or change the Fusing Rollers. |
| | 5 | Is the PH Unit window glass dirty? | YES | Clean the window glass. |
| | 6 | Is the light path between PH and PC dirty with dust? | YES | Remove dust. |
| | | | NO | Change the I/C. |
| IR | 1 | Is the Shading Sheet on the Original Glass dirty? | YES | Clean or change. |
| | 2 | Do the connections from CCD to HGB remain intact? | NO | Reconnect. |
| | 3 | Do the connections from HGB to UN2 remain intact? | YES | Change CCD, HGB, or UN2, in that order. |
| | | | NO | Reconnect. |

**(8) Void Areas**

| Section | Step | Check Item | Result | Action |
|---|---|---|---|---|
| Engine | 1 | Does the image get better when a copy is made with new paper loaded? | YES | Change the paper. Instruct the user on the storage of paper. |
| | 2 | Is the Image Transfer Roller installed correctly? | NO | Install correctly. |
| | 3 | Is the Image Transfer Roller dented or scratched? | YES | Change the Image Transfer Roller. |
| | 4 | Is the image transfer current terminal intact? | NO | Check and change as necessary. |
| | 5 | Are the Fusing Rollers scratched or deformed? | YES | Change the Fusing Rollers. |
| | | | NO | Change the I/C. |
| IR | 1 | Is the Original Glass dirty? | YES | Clean or change. |
| | 2 | Do the connections from CCD to HGB remain intact? | NO | Reconnect. |
| | 3 | Do the connections from HGB to UN2 remain intact? | YES | Change CCD, HGB, or UN2, in that order. |
| | | | NO | Reconnect. |

**(9) Smear on Back**

| Section | Step | Check Item | Result | Action |
|---|---|---|---|---|
| Engine | 1 | Is the Image Transfer Roller dirty? | YES | Clean or change. |
| | 2 | Has toner spilled from the I/C inside of the copier? | YES | Clean the interior and change I/C. |
| | 3 | Are the Fusing Rollers dirty? | YES | Clean or change the Fusing Rollers. |

**(10) Uneven Image Density**

| Section | Step | Check Item | Result | Action |
|---|---|---|---|---|
| Engine | 1 | Is the Image Transfer Roller dirty or deteriorated? | YES | Clean or change the Image Transfer Roller. |
| | 2 | Does the image get better when a copy is made with new paper loaded? | YES | Change the paper. Instruct the user on the storage of paper. |
| | | | NO | Change the I/C or PWB-A. |
| IR | 1 | Are the Original Glass, mirrors, and lens dirty with foreign matter? | YES | Clean the Original Glass, mirrors, and lens. |
| | 2 | Is the Shading Sheet on the Original Glass dirty? | YES | Clean or change. |
| | 3 | Is the Exposure Lamp dirty or deteriorated? | YES | Clean or change. |
| | 4 | Do the connections from CCD to HGB remain intact? | NO | Reconnect. |
| | 5 | Do the connections from HGB to UN2 remain intact? | YES | Change CCD, HGB, or UN2, in that order. |
| | | | NO | Reconnect. |

**(11) Gradation Reproduction Failure**

| Section | Step | Check Item | Result | Action |
|---|---|---|---|---|
| Engine | 1 | Does the image get better when a copy is made with new paper loaded? | YES | Change the paper. Instruct the user on the storage of paper. |
| | | | NO | Change PWB-A. |
| IR | 1 | Is the Shading Sheet dirty? | YES | Clean or change. |
| | 2 | Is the Original Glass dirty? | YES | Clean or change. |
| | 3 | Do the connections from CCD to HGB remain intact? | NO | Reconnect. |
| | 4 | Do the connections from HGB to UN2 remain intact? | YES | Change CCD, HGB, or UN2, in that order. |
| | | | NO | Reconnect. |

**(12) Rough Image**

| Section | Step | Check Item | Result | Action |
|---|---|---|---|---|
| Engine | 1 | Is the Image Transfer Roller dirty? | YES | Clean or change. |
| | 2 | Is the image transfer current terminal intact? | YES | Change HV1, I/C, PH Unit, or PWB-A, in that order. |
| | | | NO | Check and change as necessary. |
| IR | 1 | Do the connections from CCD to HGB remain intact? | NO | Reconnect. |
| | 2 | Do the connections from HGB to UN2 remain intact? | YES | Change CCD, HGB, or UN2, in that order. |
| | | | NO | Reconnect. |

**(13) Periodically Uneven Image**

| Section | Step | Check Item | Result | Action |
|---|---|---|---|---|
| Engine | 1 | Is the Developing Unit drive gear cracked or dirty with foreign matter? | YES | Clean or change. |
| | 2 | Is the PC Drum drive gear cracked or dirty with foreign matter? | YES | Clean or change. |
| | 3 | Is the Synchronizing Roller drive gear cracked or dirty with foreign matter? | YES | Clean or change. |
| | 4 | Is the Fusing Unit drive gear cracked or dirty with foreign matter? | YES | Clean or change. |
| | 5 | Is the PH Assy secured properly? | YES | Change the I/C or PWB-A. |
| | | | NO | Secure properly. |
| IR | 1 | Is the Scanner Motor drive gear cracked or dirty with foreign matter? | YES | Clean or change. |
| | 2 | Is the Scanner Motor secured properly? | NO | Secure properly. |
| | 3 | Is the Scanner secured properly? | NO | Secure properly. |
| | 4 | Are the Scanner Drive Cables wound properly? | NO | Wind the cables properly. |
| | 5 | Are the Scanner rails damaged or dirty with foreign matter? | YES | Clean or change. |
| | 6 | Do the connections from CCD to HGB remain intact? | NO | Reconnect. |
| | 7 | Do the connections from HGB to UN2 remain intact? | YES | Change CCD, HGB, or UN2, in that order. |
| | | | NO | Reconnect. |