FrameMaker Ver.5.5(PC) PF-108/PF-110 OPTION FOR Di350
98.08.28

PF-108/PF-110

SERVICE MANUAL



MINOLTA

14413

CONTENTS

GENERAL, MECHANICAL/ELECTRICAL

1. SPECIFICATIONS M-1
2. PARTS IDENTIFICATION M-2
3. CROSS-SECTIONAL VIEW M-3
4. DRIVE SYSTEM M-4
5. ELECTRICAL COMPONENTS LAYOUT M-4
6. MECHANICAL OPERATIONS M-5
   6-1. Edge Guide and Trailing Edge Stop M-5
      (1) Universal Cassette M-5
      (2) Fixed Paper Size Cassette M-5
   6-2. Paper Lifting Plate M-6
   6-3. Cassette-in-Position Detection M-6
   6-4. Paper Size Setting M-7
      (1) Cassette Paper Size Setting M-7
      (2) Paper Sizes That Can be Set M-8
   6-5. Paper Near Empty Detection M-9
   6-6. Paper Empty Detection M-10
   6-7. Paper Separating Mechanism M-11
   6-8. Paper Take-Up Roll M-12
   6-9. Paper Take-Up Retry Control M-13

DIS/REASSEMBLY, ADJUSTMENT

1. DISASSEMBLY D-1
   1-1. Removal of the Paper Take-Up Rolls D-1
   1-2. Cleaning of the Paper Take-Up Rolls D-1
   1-3. Cleaning of the Vertical Transport Roller/Rolls D-1
   1-4. Replacement of the Paper Lifting Springs
      (Fixed Paper Size Cassette only) D-2
2. ADJUSTMENT D-3
   2-1. Paper Lifting Spring Adjustment (Fixed Paper Size Cassette) D-3
   2-2. CD Registration Adjustment (Printer) D-4

MISFEED DETECTION

1. MISFEED DETECTION T-1
   1-1. Misfeed Detecting Sensors Layout T-1
   1-2. Types of Misfeed and Misfeed Detection Timings T-1

GENERAL, MECHANICAL/ELECTRICAL



1 SPECIFICATIONS

Name	:	PF-108 (Fixed Paper Size Cassette) PF-110 (Universal Cassette)
Type	:	Add-on paper source unit
Installation	:	Mounted beneath Upper Drawer of copier
Type of Paper	:	Plain paper (60 to 90 g/m² or 16 to 24 lbs.), recycled paper (60 to 90 g/m² or 16 to 24 lbs.)
Paper Size	:	Fixed Paper Size Cassette: B5L/C to A3L or 8-1/2" × 11"L/C to 11" × 17"L Universal Cassette: Metric Areas: A5C, A4L, A4C, A3L, B4L, FLS L, 11" × 14"L, special size Inch Areas : 5-1/2" × 8-1/2"C, 8-1/2" × 11"L, 11" × 8-1/2"C, 8-1/2" × 14"L, 11" × 14"L, 11" × 17"L, special size (L: Lengthwise; C: Crosswise)
Registration	:	Center
Capacity	:	Fixed Paper Size Cassette: 500 sheets Universal Cassette: 250 sheets
Power Requirements	:	DC24V ±10%, DC5V ±10% (supplied from copier)
Power Consumption	:	10W or less
Dimensions	:	535 (W) × 544.7 (D) × 127.5 (H) mm or 21" (W) × 21-1/2" (D) × 5" (H)
Weight	:	Fixed Paper Size Cassette: 6.9 kg or 15 lbs. Universal Cassette: 5.4 kg or 12 lbs.
Environmental Requirements	:	Same as copier

2 PARTS IDENTIFICATION

Fixed Paper Size Cassette

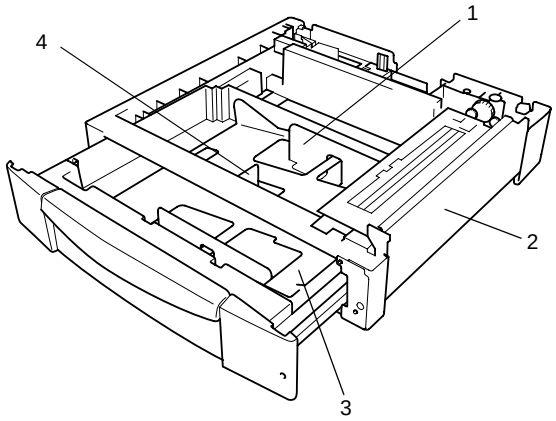

Universal Cassette

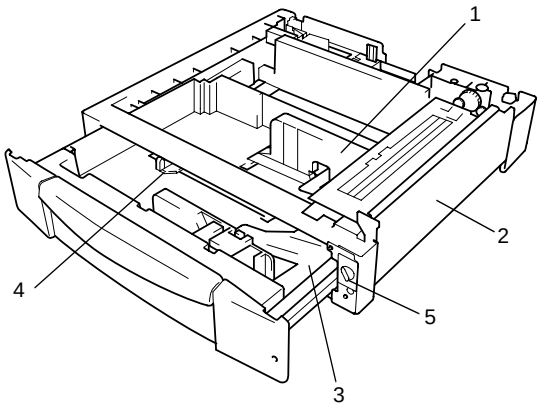

1. Edge Guide
2. Side Cover
3. Paper Lifting Plate
4. Trailing Edge Stop
5. Paper Size Setting Dial (Universal Cassette only)

3 CROSS-SECTIONAL VIEW

Fixed Paper Size Cassette

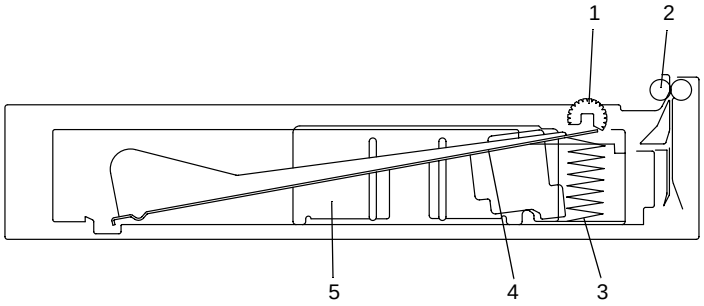

4498M028AB

Universal Cassette

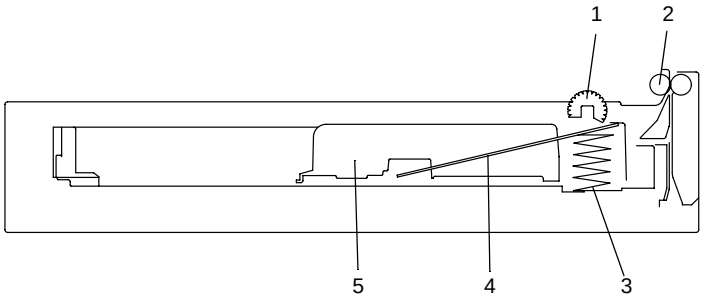

4498M029AA

1. Paper Take-Up Roll
2. Vertical Transport Roller
3. Paper Lifting Spring
4. Paper Lifting Plate
5. Edge Guide

4 DRIVE SYSTEM

In both the Fixed Paper Size Cassette and Universal Cassette, drive from the Main Drive Motor of the copier is transmitted to their paper take-up drive mechanisms via a gear train.

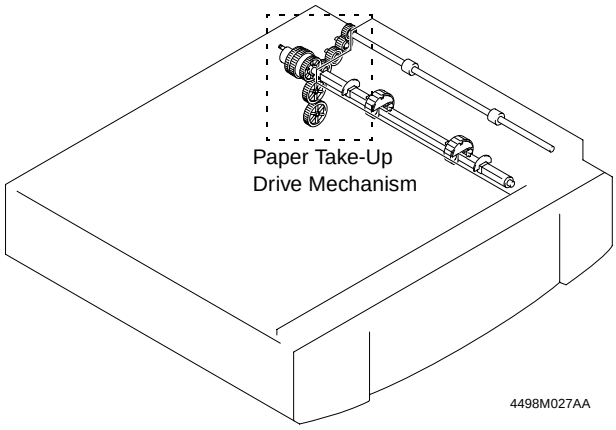

5 ELECTRICAL COMPONENTS LAYOUT

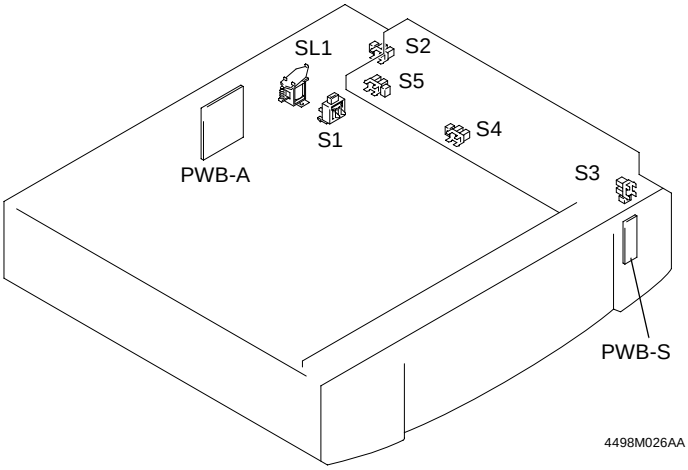

Symbol	Name	Symbol	Name
PWB-A	Cassette Main Board	S2	Side Cover Set Sensor
PWB-S	Paper Size Detecting Board	S3	Take-Up Sensor
SL1	Take-Up Solenoid	S4	Paper Empty Sensor
S1	Cassette Set Switch	S5	Paper Near Empty Sensor

6 MECHANICAL OPERATIONS

6-1. Edge Guide and Trailing Edge Stop

(1) Universal Cassette

- The universal cassette allows the user to slide freely the Edge Guide and Trailing Edge Stop to accommodate paper of different sizes.
- Both the Edge Guide and Trailing Edge Stop can be locked into position by meshing the notches in the Lock Lever with those in the cassette.
- The Edge Guide employs a rack-and-pinion sliding mechanism.

Trailing Edge Stop

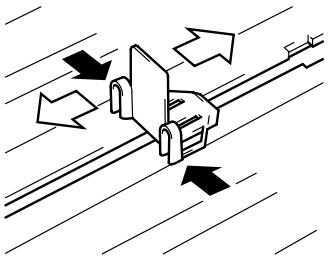

4498M002AA

Edge Guide

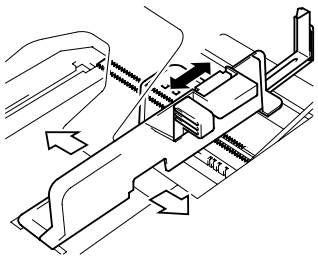

4498M003AA

(2) Fixed Paper Size Cassette

The fixed paper size cassette has the Edge Guide and Trailing Edge Stop screwed into fixed positions.

6-2. Paper Lifting Plate

- The Paper Lifting Plate of each cassette is raised at all times by two Paper Lifting Springs.
- For the Fixed Paper Size Cassette, the type of the Paper Lifting Springs must be changed according to the paper size. (For details, see DIS/REASSEMBLY.)

Fixed Paper Size Cassette

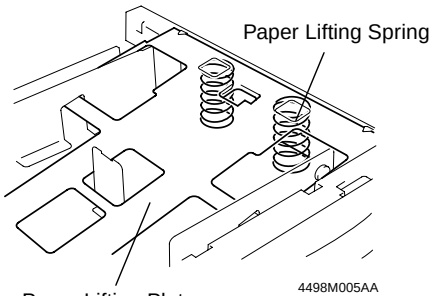

4498M005AA

Universal Cassette

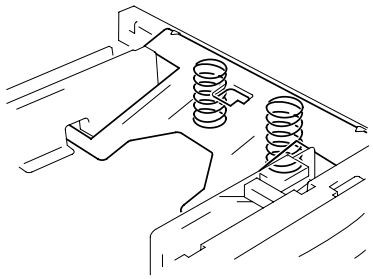

4498M006AA

6-3. Cassette-in-Position Detection

The copier detects that the cassette is slid into position as follows.

- The rib on the cassette frame presses the Cassette Set Switch located on the back panel of the copier, allowing the copier to detect that the cassette is slid in.
- The position of the rib on the cassette frame is different between the Fixed Paper Size Cassette and Universal Cassette so that the copier will know which cassette is slid into position.

Fixed Paper Size Cassette

Universal Cassette

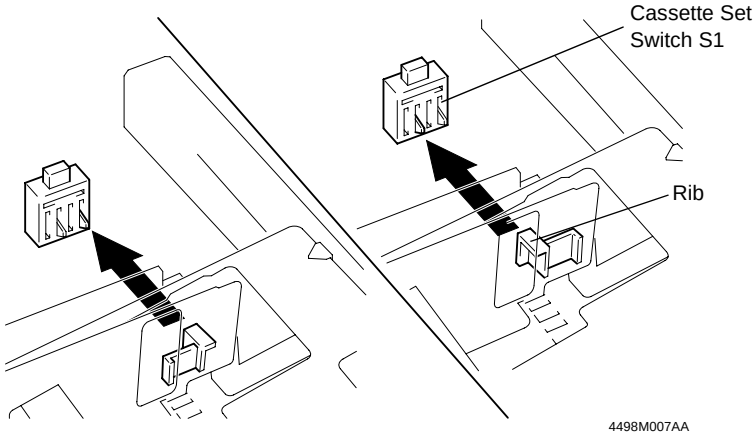

4498M007AA

6-4. Paper Size Setting

(1) Cassette Paper Size Setting

- With the Fixed Paper Size Cassette, the paper size is set using the Tech. Rep. Choice function.
- With the Universal Cassette, it is set by turning the Paper Size Setting Dial to the corresponding paper size position. The rotary switch and Paper Size Detecting Board behind the dial let the copier know the paper size currently set with the dial.

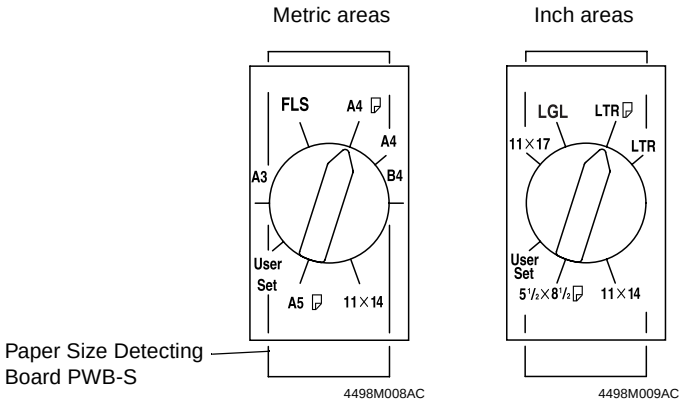

Relationship Between Dial Position and Switch Output Signal

SW No. 8421	Position
1111	0
1110	1
1101	2
1100	3
1011	4
1010	5
1001	6
1000	7
0111	8
0110	9

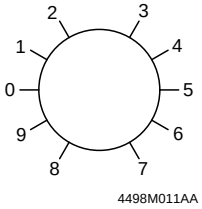

(2) Paper Sizes That Can be Set

Paper Size Name	Inch Representation	CD × FD (mm)	Fixed Paper Size Cassette	Universal Cassette	
				Metric Area	Inch Area
A3L	–	297 × 420	❍	◎	●
B4L	–	257 × 364	❍	◎	●
A4L	–	210 × 297	❍	◎	●
A4C	–	297 × 210	❍	◎	●
B5L	–	182 × 257	❍	●	●
B5C	–	257 × 182	❍	●	●
A5C	–	210 × 148	–	◎	●
ISO B5L	–	176 × 250	●	–	–
ISO B5C	–	250 × 176	●	●	●
FLSL/F4L	–	210 × 330	❍	◎	●
Ledger L	11” × 17”	279 × 432	❍	●	◎
Legal L	8-1/2” × 14”	216 × 356	❍	●	◎
G. Legal L	8-1/2” × 13”	216 × 330	●	●	Δ
Letter L	8-1/2” × 11”	216 × 279	❍	●	◎
Letter C	11” × 8-1/2”	279 × 216	❍	●	◎
G. Letter L	8” × 10-1/2”	203 × 267	●	–	–
G. Letter C	10-1/2” × 8”	267 × 203	●	●	Δ
Invoice C	8-1/2” × 5-1/2”	216 × 140	–	●	◎
Executive L	7-1/4” × 10-1/2”	184 × 260	●	–	–
Executive C	10-1/2” × 7-1/4”	260 × 184	●	●	●
Special size	–	297 × 430	●	–	–
	–	280 × 420	●	–	–
	–	220 × 330	●	–	–
	–	216 × 297	●	Δ	●
	–	297 × 216	●	Δ	●
	–	220 × 280	●	–	–
	–	280 × 220	●	–	–
	11” × 14”L	279 × 356	❍	◎	◎
	9-1/4” × 14”L	236 × 356	●	–	–
	8-1/4” × 11-3/4”L	210 × 301	●	–	–
	8” × 13”L	203 × 330	●	–	–

❍ : Paper size setting (panel input)
◎ : Paper size setting (dial input)
● : Not supported by copier
Δ : Panel input with the Dial placed in “User Set”
L: Lengthwise; C: Crosswise

6-5. Paper Near Empty Detection

- A paper-near-empty condition is detected through the detection of the height of the Paper Lifting Plate.
- As the paper stack is consumed during a copy cycle, the Paper Lifting Plate of the cassette is gradually raised by the tension of the Paper Lifting Springs. When the Paper Near Empty Sensor is then unblocked, the copier determines that it is a paper-near-empty condition (the number of sheets of paper (80 g/m^2) still available for use: 50 ±30). The LED then starts blinking.
- Since the amount of paper still available for use varies while a paper take-up sequence is in progress, detection is made at a timing when the Paper Take-Up Roll is in the retracted position.

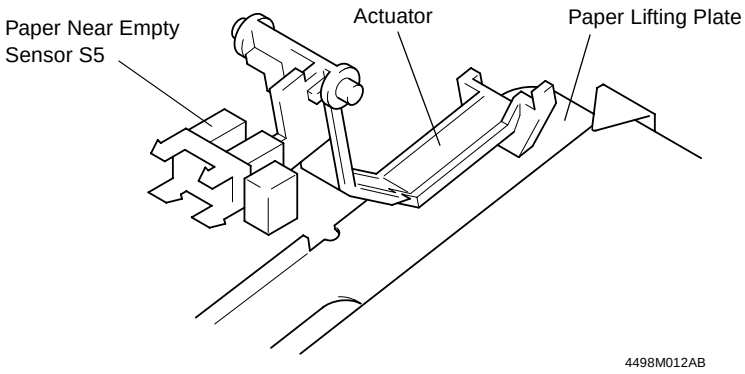

4498M012AB

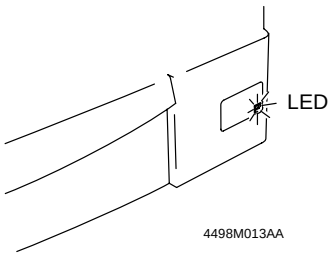

4498M013AA

6-6. Paper Empty Detection

- When the cassette runs out of paper, the actuator for the Paper Empty Sensor drops into the cutout in the Paper Lifting Plate. This unblocks the sensor and the copier detects that the cassette has run out of paper.
- When a paper-empty condition is detected, the blinking LED lights up steadily.
- As noted earlier, the Paper Lifting Plate is raised at all times by the tension of the Paper Lifting Springs. This causes the actuator for the Paper Empty Sensor to tend to be caught by the paper stack when the cassette is slid out of the copier. To prevent this, the actuator is slightly tilted. This, however, presents another problem of a smaller operating stroke of the actuator, which in turn increases the possibility of the actuator activating the sensor by the flexing of a sheet of paper as it is taken up and fed in. To prevent this false detection of a paper-empty condition, the paper empty detection is enabled only when the Paper Take-Up Roll is in the retracted position.

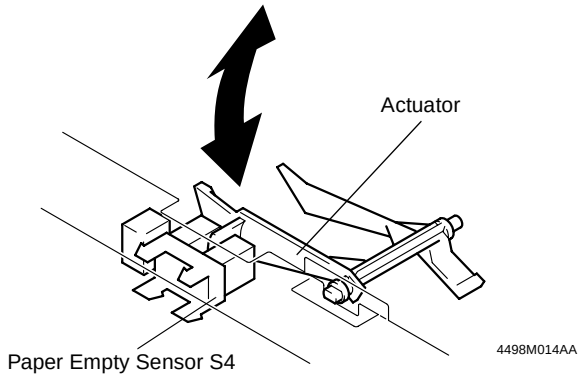

6-7. Paper Separating Mechanism

- Each cassette has fingers that function to separate the top sheet of paper from the rest of the paper stack at paper take-up. The fingers are fitted to the right front and rear corners of the cassette. When the Paper Take-Up Roll starts turning to take up the top sheet of paper, its turning force is directly transmitted to the top sheet of paper as it is in direct contact with the Paper Take-Up Roll. That force overcomes the block of the fingers, causing the top sheet of paper to ride over the fingers and be fed out of the cassette into the copier.
- The collars and mylars placed on both sides of the Paper Take-Up Roll restrict the length of the loops that form in the paper at the fingers, helping the paper edges to easily slip out of the fingers.
- As to the second sheet of paper, the paper transport force obtained through friction with the top sheet of paper is weak and does not allow the second sheet of paper to ride over the block of the fingers. Hence, the second sheet of paper remains stationary with the rest of the paper stack in the cassette.
- When there are only two sheets of paper left in the cassette, the bottom sheet can be fed with the top one if the friction of the Paper Lifting Plate is weak. The Friction Plate affixed to the Paper Lifting Plate prevents this from happening.

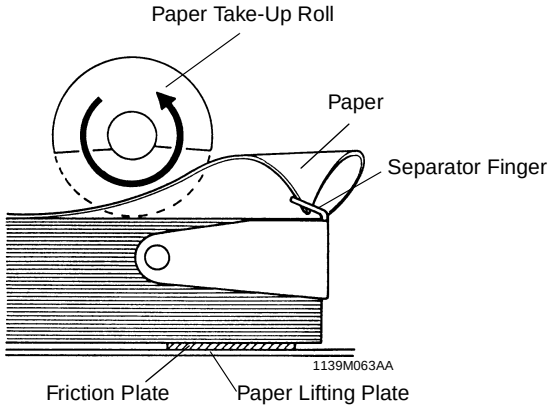

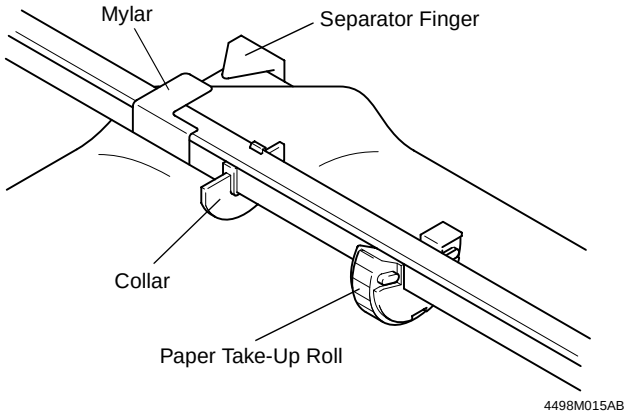

6-8. Paper Take-Up Roll

- Since the Paper Lifting Plate is raised at all times by the Paper Lifting Springs, paper is wedged in the mechanism when the cassette is slid out of the copier if the Paper Take-Up Roll is round in shape. So the roll is semicircular and the circular part of the roll is positioned on top at times other than take-up. For the purpose of explanation, we call this position of the Paper Take-Up Roll the “retracted” position.
- The Paper Take-Up Roll is grooved to keep good friction under heavy loading.
- In each of the Fixed Paper Size Cassette and Universal Cassette, there are two Paper Take-Up Rolls mounted.
- When the Take-Up Solenoid is energized, it causes the spring tension to bring the drive gear into mesh with the clutch gear. This results in the drive being transmitted to the Paper Take-Up Rolls.

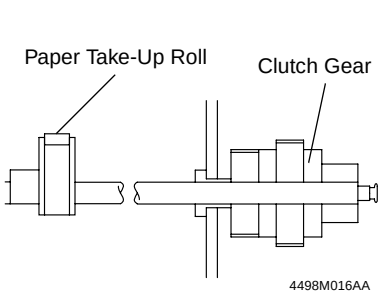

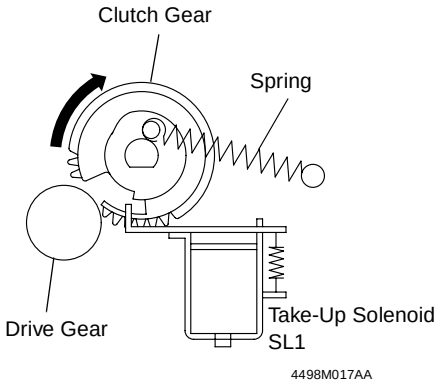

Timing Chart (A4 crosswise, two sheets)

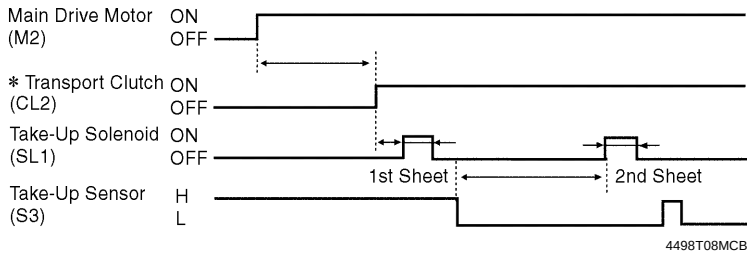

* Transport Clutch CL2 may be deenergized temporarily (for temporary stop motion).

6-9. Paper Take-Up Retry Control

To minimize the occurrence of paper misfeed due to a slippery Paper Take-Up Roll, the Take-Up Solenoid is energized a second time if a sheet of paper fails to reach the Take-Up Sensor within a given period of time after it has been deenergized.
The control timing is as follows.

A misfeed results if the sheet of paper does not reach the Take-Up Sensor even after three paper take-up sequences.

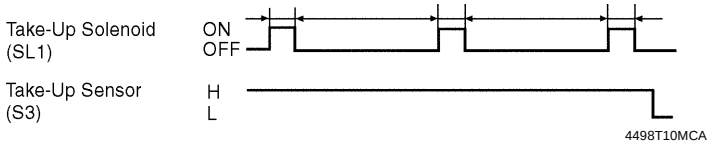

DIS/REASSEMBLY, ADJUSTMENT



1 DISASSEMBLY

1-1. Removal of the Paper Take-Up Rolls

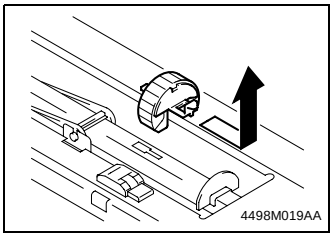

1. Remove the upper cassette.
2. Unlock the Paper Take-Up Roll and slide it off its shaft.

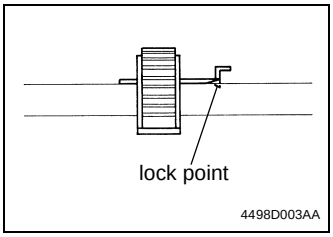

Note
When installing the roll, make sure it securely locks into place as illustrated.

1-2. Cleaning of the Paper Take-Up Rolls

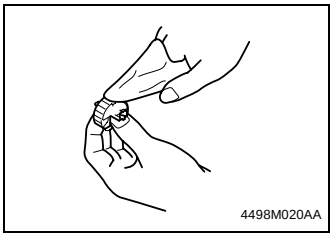

Wipe the surface of the Paper Take-Up Rolls clean with a soft cloth dampened with alcohol.

1-3. Cleaning of the Vertical Transport Roller/Rolls

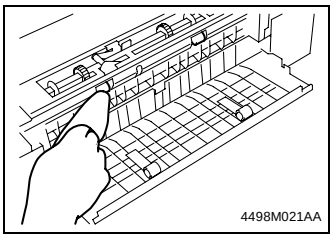

Wipe the surface of the Vertical Transport Roller/ Rolls clean with a soft cloth dampened with alcohol.

1-4. Replacement of the Paper Lifting Springs (Fixed Paper Size Cassette only)

The replacement springs are housed on the bottom of the cassette.

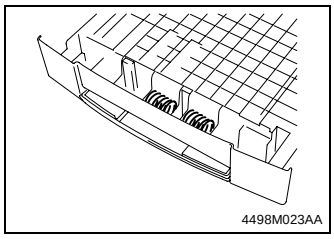

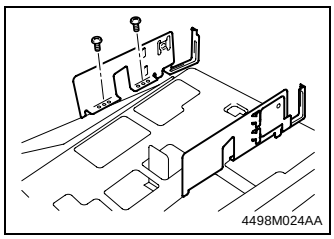

1. Remove the cassette.
2. Remove the two Edge Guide Assemblies (two screws each).

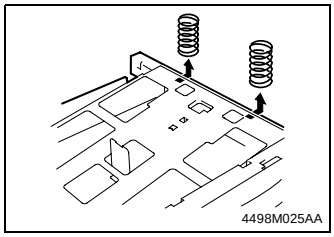

3. Replace the springs. (See ADJUSTMENT.)

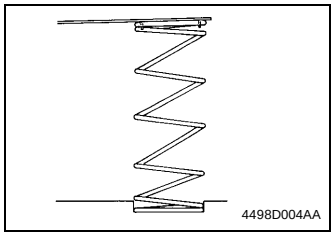

Note
When installing the springs, make sure both ends of the spring are properly secured as illustrated.

2 ADJUSTMENT

2-1. Paper Lifting Spring Adjustment (Fixed Paper Size Cassette)

Whenever the paper size has been changed, replace the Paper Lifting Springs by following the table given below. (For the replacement procedure, see DISASSEMBLY.)
The replacement springs are housed on the bottom of the cassette.

Paper Size Name	CD × FD (mm)	Spring
A3L	297 × 420	A
B4L	257 × 364	A
A4L	210 × 297	B
A4C	297 × 210	B
B5L	182 × 257	C
B5C	257 × 182	C
FLSL/F4L	210 × 330	B
Ledger L	279 × 432	A
Legal L	216 × 356	B
Letter L	216 × 279	B
Letter C	279 × 216	B
11” × 14”L	279 × 356	A

✻ Spring A: Silver
Spring B: Black
Spring C: Gold; not included, must order separately.

L: Lengthwise; C: Crosswise

2-2. CD Registration Adjustment (Printer)

Requirement:

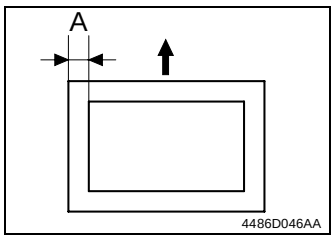

Dimension A on the output test print should meet the following specifications.

Specifications	Adjustment Mode	Setting Range
A4C 10.0 ±2.0 mm Letter C 10.0 ±2.0 mm	Registration CD	-4 to +4

NOTE:
This adjustment should be made whenever the PH has been replaced with a new one.

For the adjustment procedures, see ADJUSTMENT in the SERVICE MANUAL for the copier.

MISFEED DETECTION



1 MISFEED DETECTION

1-1. Misfeed Detecting Sensors Layout

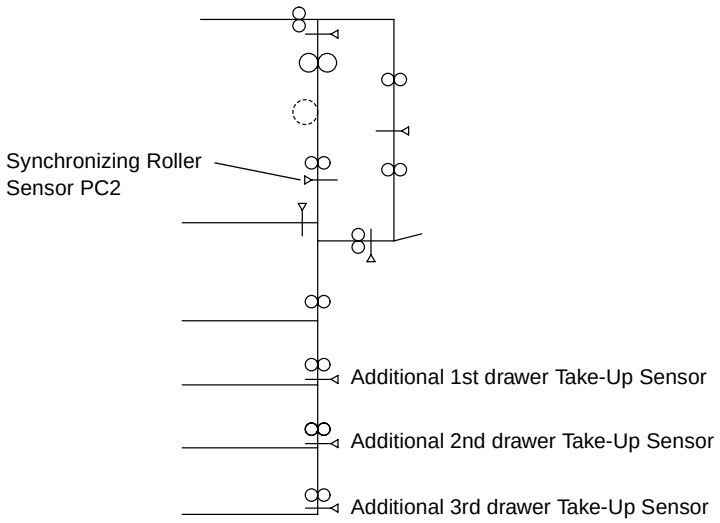

1-2. Types of Misfeed and Misfeed Detection Timings

Type	Detection Timing
Paper left in path	The output from Take-Up Sensor S3 is blocked (L) when the copier Power Switch is turned ON or a misfeed is reset.
Detection of paper stopped at Take-Up Sensor	• Additional 1st to 3rd drawer The period of time is counted during which Take-Up Sensor S3 remains blocked (L). The detection result is equivalent to +260 mm longer than the recognized paper length.
Paper take-up failure detection	• Additional 1st to 3rd drawer Take-Up Sensor S3 is not blocked (L) within a given period of time after Take-Up Solenoid SL1 has been energized (after two paper take-up retry sequences).

Type	Detection Timing
Vertical transport paper leading edge detection	• Additional 1st drawer Synchronizing Roller Sensor PC2 is not unblocked (H) within a given period of time after Take-Up Sensor S3 of the Additional 1st drawer has been blocked (L). • Additional 2nd drawer 1. Take-Up Sensor S3 of the additional 1st drawer is not blocked (L) within a given period of time after Take-Up Sensor S3 of the 2nd drawer has been blocked (L). 2. PC2 is not unblocked (H) within a given period of time after S3 of the additional 1st drawer has been blocked (L). • Additional 3rd drawer 1. Take-Up Sensor S3 of the additional 2nd drawer is not blocked (L) within a given period of time after Take-Up Sensor S3 of the 3rd drawer has been blocked (L). 2. S3 of the additional 1st drawer is not blocked within a given period of time after S3 of the additional 2nd drawer has been blocked (L). 3. PC2 is not unblocked within a given period of time after S3 of the additional 1st drawer has been blocked (L).
Size error detection ✻ The detection described on the right is also made during a 2-sided copy cycle.	• Additional 1st to 3rd drawer The period of time is counted from when Take-Up Sensor S3 is blocked (L) to when it is unblocked (H). The difference between the detected length and the paper size which has been recognized is more than ±20 mm.

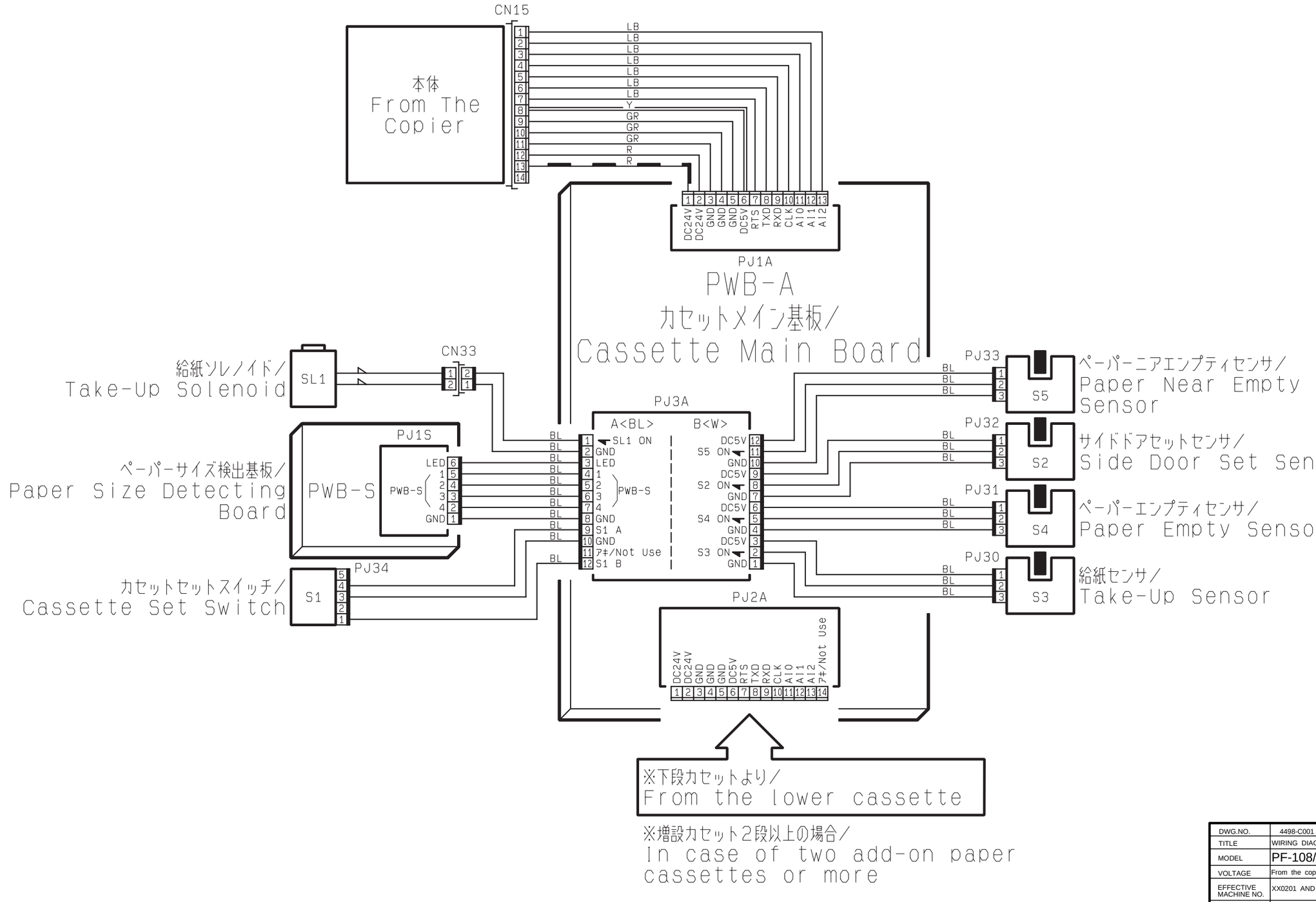

DWG.NO.	4498-C001
TITLE	WIRING DIAGRAM
MODEL	PF-108/PF-110
VOLTAGE	From the copier
EFFECTIVE MACHINE NO.	XX0201 AND ONWARD
DATE ISSUED	Dec.1998

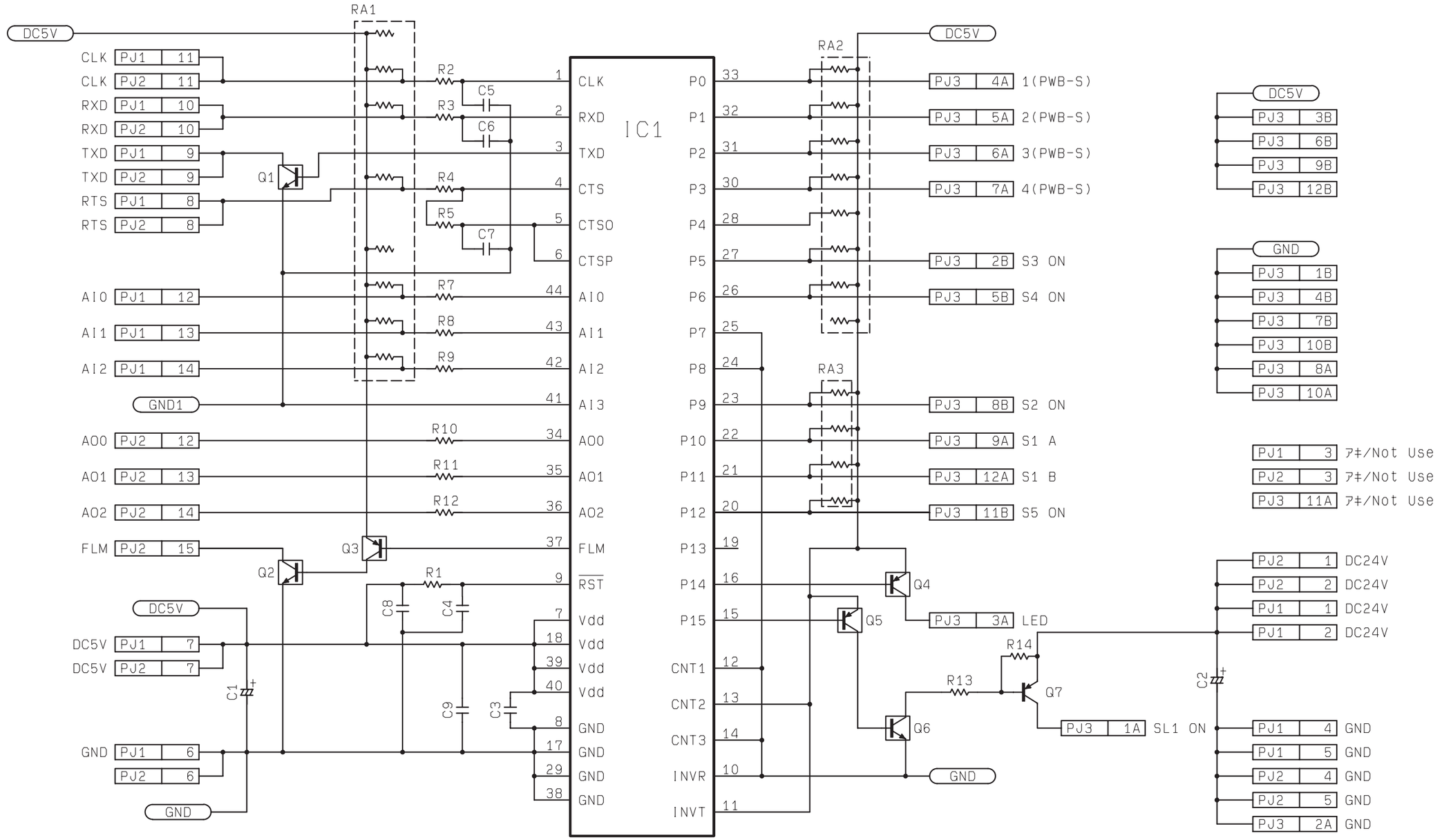

DWG.NO.	4498-C201-0A
TITLE	WIRING DIAGRAM PWB-A
MODEL	PF-108/PF-110
VOLTAGE	From the copier
EFFECTIVE MACHINE NO.	XX0201 AND ONWARD
DATE ISSUED	Dec.1998