Di450/Di550

SERVICE MANUAL

[GENERAL]



INDEX (GENERAL)

GENERAL

MECHANICAL/ELECTRICAL

GENERAL

CONTENTS

1. SAFETY INFORMATION G-1
2. SPECIFICATION G-6
3. PRECAUTIONS FOR INSTALLATION G-9
   - 3-1. Installation Site G-9
   - 3-2. Power Source G-9
   - 3-3. Grounding G-9
4. PRECAUTIONS FOR USE G-10
   - 4-1. To ensure that the copier is used in an optimum condition G-10
   - 4-2. Operating Environment G-10
   - 4-3. Power Requirements G-10
   - 4-4. Note G-10
5. HANDLING OF CONSUMABLES G-11
6. OTHER PRECAUTIONS G-11
7. SYSTEM OPTIONS G-12

1. SAFETY INFORMATION

Laser Safety

This is a digital machine which prints by means of a laser. There is no possibility of danger from the laser, provided the machine is operated according to the instructions in this manual.

Since radiation emitted by the laser is completely confined within protective housing, the laser beam cannot escape from the machine during any phase of user operation.

This machine is certified as a Class 1 product. This means the machine does not produce hazardous laser radiation.

CAUTION: The use of controls, adjustments or performance of procedures other than those specified in this manual may result in hazardous radiation exposure. Because of this, Minolta strongly recommends that you operate your copy machine only as described in this documentation.

Internal Laser Radiation

Maximum Average Radiation Power: 13.6 μW at laser aperture of the print head unit

Wavelength: 785 nm

This product employs a Class IIIb Laser Diode that emits an invisible laser beam.
The Laser Diode and Scanning Polygon Mirror are incorporated in the print head unit.
The print head unit is NOT A FIELD SERVICE ITEM.
Therefore, the print head unit should not be opened under any circumstances.

For United States

CDRH regulation
This copier is certified as a Class 1 Laser product under the Radiation Performance Standard according to the Food, Drug and Cosmetic Act of 1990. Compliance is mandatory for Laser products marketed in the United States and is reported to the Center for Devices and Radiological Health (CDRH) of the U.S. Food and Drug Administration of the U.S. Department of Health and Human Services (DHHS). This means that the device does not produce hazardous laser radiation.

The label shown on page G-3 indicates compliance with the CDRH regulations and must be attached to laser products marketed in the United States.

CAUTION: Use of controls, adjustments or performance of procedures other than those specified in this manual may result in hazardous radiation exposure.

This is a semiconductor laser. The maximum power of the laser diode is 0.68 mW and the wavelength is 785 nm.

For Europe

CAUTION: Use of controls, adjustments or performance of procedures other than those specified in this manual may result in hazardous radiation exposure.

This is a semiconductor laser. The maximum power of the laser diode is 0.68 mW and the wavelength is 785 nm.

For Denmark

ADVARSEL
Usynlig laserstråling ved åbning, når sikkerhedsafbrydere er ude af funktion.
Undgå udsættelse for stråling. Klasse 1 laser produkt der opfylder IEC60825 sikkerheds kravene.

Dansk: Dette er en halvlederlaser. Laserdiodens højeste styrke er 0.68mW og bølgelængden er 785nm.

For Finland

LUOKAN 1 LASERLAITE

VAROITUS
Laitteen käyttäminen muulla kuin tässä käyttöohjeessa mainitulla tavalla saattaa altistaa käyttäjän turvallisuusluokan 1 ylittävälle näkymättömälle lasersäteilylle.

VARO
Avattaessa ja suojalukitus ohitettaessa olet alttiina näkymättomälle lasersäteilylle. Älä katso säteeseen.

Tämä on puolijohdelaser. Laserdiodin suurin teho on 0.68mW ja aallonpituus on 785nm.

For Sweden

KLASS 1 LASER APPARAT

VARNING
Om apparaten används på annat sätt än i denna bruksanvisning specificerats, kan användaren utsättas för osynlig laserstrålning, som överskrider gränsen för laserklass 1.

VARNING
Osynlig laserstråining när denna del är öppnad och spärren är urkopplad. Betrakta ej stråien.

Det här är en halvledarlaser. Den maximala effekten för laserdioden är 0.68mW och våglängden är 785nm.

For Norway

ADVERSEL
Dersom apparatet brukes på annen måte enn spesifisert i denne bruksanvisning, kan brukeren utsettes för unsynlig laserstrålning, som overskrider grensen for laser klass 1.

Dette en halveder laser. Maksimal effekt till laserdiode er 0.68 mW og bølgelengde er 785 nm.

Laser Safety Label

A laser safety label is attached to the outside of the copy machine as shown below.

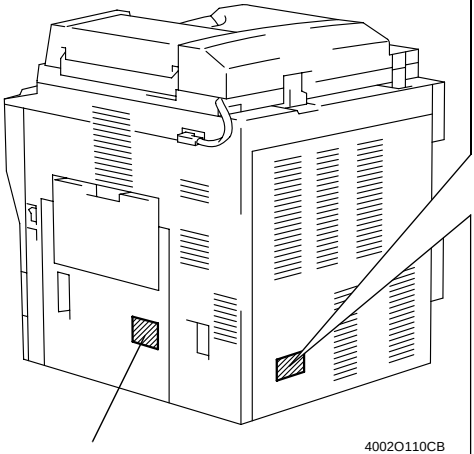

4002O110CB

Manufacturer's Name Plate

Laser safety label

For Europe



For United States

1166O252BA



1166O248AA

The Manufacturer's Name Plate is affixed at the position illustrated above.
Please write down the Model Name and Serial No. of your copier here.

Model:
Serial No.:

Label inside copy machine

The following laser safety label will be attached inside the copy machine as shown below.

Please read the following for your own protection.

⚠ Caution

Opening the cover indicated by the Caution label may expose you to harmful laser radiation which could cause damage or loss of eyesight. Do not open the cover when the power is on.

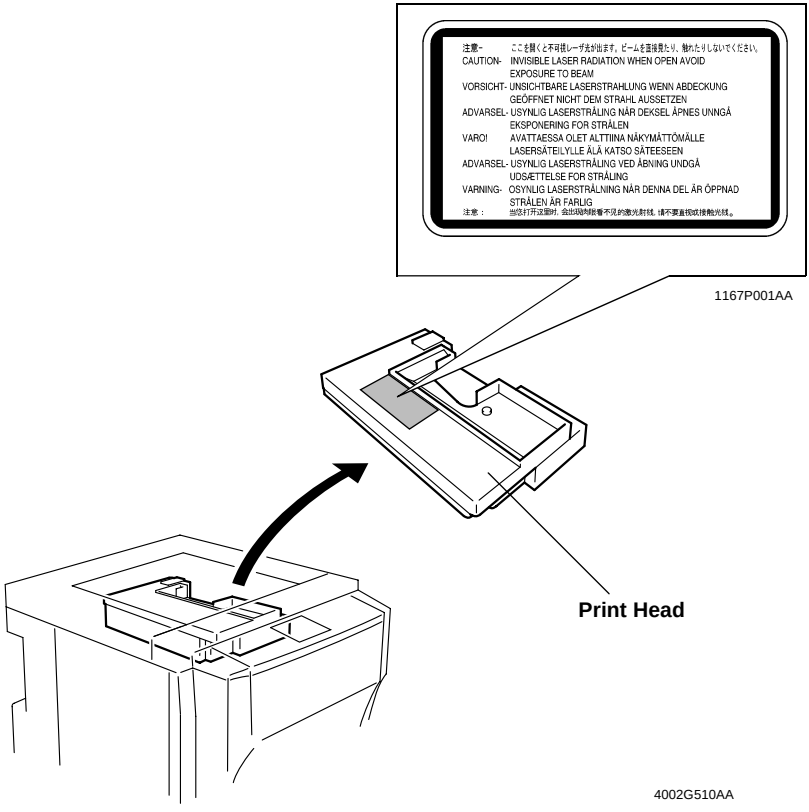

ALL Areas

CAUTION

Danger of explosion if battery is incorrectly replaced.
Replace only with the same or equivalent type recommended by the manufacturer.
Dispose of used batteries according to the manufacturer's instructions.

Germany only

VORSICHT!

Explosinsgefahr bei unsachgemäßen austausch der batterie.
Ersatz nur durch denselben oder einen vom hersteller empfohlenen ähnlichen typ.
Entsorgung gebrauchter batterien nach angaben des herstellers.

Denmark only

ADVARSEL!

Lithiumbatteri - Eksplosionsfare ved fejlagtig håndtering Udskiftning må kun ske med batteri af samme fabrikat og type.
Levér det brugte batteri tilbage til leverandøren.

Norway only

ADVARSEL

Eksplosjonsfare ved feilaktig skifte av batteri.
Benytt samme batteritype eller en tilsvarende type anbefalt av apparatfabrikanten.
Brukte batterier kasseres i henhold til fabrikantens instruksjoner.

Sweden only

VARNING

Explosionsfara vid felaktigt batteribyte.
Använd samma batterityp eller en ekvivalent typ som rekommenderas av apparattillverkaren.
Kassera använt batteri enligt fabrikantens instruktion.

Finland only

VAROITUS

Paristo voi räjähtää, los se on virheellisesti asennettu.
Vaihda paristo ainoastaan laitevalmistajan suosittelemaan tyyppiin.
Hävitä Käytetty paristo valmistajan ohjeiden mukaisesti.

ALL Areas

CAUTION

"Replace only with the same or equivalent type recommended by the manufacturer.
Dispose of used IC Package according to the manufacturer's instructions."

Germany only

VORSICHT!

"Austausch nur durch denselben oder einen vom Hersteller empfohlenen, gleichwertigen typ. Entsorgung gebrauchter Batterien nach Angaben des Herstellers.

2. SPECIFICATION

TYPE	:	Console
ORIGINAL SCANNING SYSTEM	:	Lens Reduction Type CCD Line Sensor
PHOTOCONDUCTOR	:	Organic Photoconductor
COPYING SYSTEM	:	Electrostatic Dry Powdered Image Transfer to Plain Paper
RESOLUTION	:	600 dpi × 600 dpi
PAPER FEEDING SYSTEM	:	4-Way system Multi Bypass Table : 50 sheets of paper 1st Drawer (Universal) : 500 sheets of paper 2nd Drawer (Universal) : 500 sheets of paper 3rd Drawer : 2500 sheets of paper 5-Way system Multi Bypass Table : 50 sheets of paper 1st Drawer (Universal) : 500 sheets of paper 2nd Drawer (Universal) : 500 sheets of paper 3rd Drawer : 500 sheets of paper 4th Drawer : 500 sheets of paper
EXPOSURE SYSTEM	:	Mirror Scanning, Slit Exposure
DEVELOPING SYSTEM	:	New Micro-Toning System
CHARGING SYSTEM	:	Comb Electrode DC Negative Corona with Scorotron System
IMAGE TRANSFER SYSTEM	:	Visible Image Transfer by means of a Single-Wire DC Negative Corona with Corotron System
PAPER SEPARATING SYSTEM	:	AC Corona with Corotron System, plus Paper Separator Finger
FUSING SYSTEM	:	Heat Roller
PAPER DISCHARGING SYSTEM	:	Charge Neutralizing Brush
MAXIMUM ORIGINAL SIZE	:	Metric-A3L; Inch-11 × 17 L (L: Lengthwise)

COPY MEDIUM ❍: Permissible -: Not permissible C: Crosswise

Paper Source		1st to 2nd Drawer	4WAY (LCC)	5WAY (3rd to 4th)	Multi Bypass Table	Duplex
Medium	Plain paper (60 to 90 g/m^2)	❍	❍	❍	❍	❍
	Translucent paper	–	–	–	❍ *1	-
	Transparencies	–	–	–	❍ *1	-
	Thick paper (90 to 157 g/m^2)	–	–	–	❍ *1	-
	Recycled paper	❍	❍	❍	❍	❍
Dimensions	Maximum (Width × Length)	297 × 432 mm	A4C	297 × 432 mm	297 × 432 mm 11-3/4 × 17 Inch	297 × 432 mm
	Minimum (Width × Length)	140 × 182 mm	8-1/2 × 11 C Inch	210 × 280 mm	100 × 140 mm 4 × 5-3/4 Inch	140 × 182 mm

*1: 20 sheets or less

MULTIPLE COPIES	: 1 to 999
WARMING-UP TIME	: 4 minute with room temperature of 20 °C and rated power voltage
FIRST COPY TIME	: A4C: 4.0 second or less (in Full size Mode using 1st Drawer)

CONTINUOUS COPY SPEED (copies/minute) Fed from 1st Drawer/Memory Mode:

45 Piece Copy Machine

Area	Zoom Ratio Size	×1.000
Metric	A3L	28
	A4L	36
	A4C	45
	B4L	32

Area	Zoom Ratio Size	×1.000
Inch	11 × 17 (L)	28
	8-1/2 × 11 (L)	38
	8-1/2 × 11 (C)	45
	8-1/2 × 14 (L)	32

55 Piece Copy Machine

Area	Zoom Ratio Size	×1.000
Metric	A3L	32
	A4L	43
	A4C	55
	B4L	36

Area	Zoom Ratio Size	×1.000
Inch	11 × 17 (L)	31
	8-1/2 × 11 (L)	45
	8-1/2 × 11 (C)	55
	8-1/2 × 14 (L)	37

L: Lengthwise; C: Crosswise

ZOOM RATIOS

	Area Mode	Metric	Inch
Fixed	Full Size	×1.000	×1.000
	Reduction	×0.816 ×0.707 ×0.500	×0.785 ×0.733 ×0.647 ×0.500
	Enlargement	×1.154 ×1.414 ×2.000	×1.214 ×1.294 ×1.545 ×2.000
Variable	25 % to 400 % (in 0.1 % increments)		

LENS	: Through Lens (F = 4.0, f = 62 mm)
EXPOSURE LAMP	: Rare Gas Fluorescent Light (20 W)
FUSING TEMPERATURE	: 190 °C

POWER/CURRENT CONSUMPTION (copier only)

Voltage	Exposure Lamp (Rating)	Fusing Heater Lamp (Rating)	Max. Power Consumption (Full System)	In Standby
115 V 120 V	24 V 20 W	120 V Upper: 850 W Lower: 200 W	1430 W ± 10 %	1230 W ± 10 %
220 V 240 V		230 V Upper: 1011 W Lower: 200 W	1700 W ± 10 %	1380 W ± 10 %

POWER REQUIREMENTS : 115 V, 120 V, 127 V, 220-240 V; 50/60 Hz

ENVIRONMENTAL CONDITIONS

COPIER DIMENSIONS : Width .... 645 mm (25-2/5 inch)
Depth .... 756 mm (29-3/4 inch)
Height ... 1032 mm (40-3/5 inch) With Cabinet

COPIER WEIGHT : 158.5 kg (348-1/4 lbs)
(Copier: 113kg, Cabinet: 45.5kg)
✻ Excluding the Copy Tray, Starter, Toner, and Paper

3. PRECAUTIONS FOR INSTALLATION

3-1. Installation Site

To ensure safety and utmost performance of the copier, the copier should NOT be used in a place:

- Where it will be subjected to extremely high or low temperature or humidity.
- Where it will be subjected to sudden fluctuations in either temperature or humidity.
- Which is exposed to direct sunlight.
- Which is in the direct air stream of an air conditioner, heater, or ventilator.
- Which has poor ventilation or is dusty.
- Which does not have a stable, level floor or where it will receive undue vibration.
- Which is near any kind of heating device.
- Which is near volatile flammables (thinner, gasoline, etc.).
- Where it may be splashed with water.
- Which puts the operator in the direct stream of exhaust from the copier.
- Where ammonia gas might be generated.

3-2. Power Source

- If any other electrical equipment is sourced from the same power outlet, make sure that the capacity of the outlet is not exceeded.
- Use a power source with little voltage fluctuation.
- Never connect by means of a multiple socket any other appliances or machines to the outlet being used for the copier.
- Ensure that the copier does not ride on the power cord or communication cable of other electrical equipment, and that it does not become wedged into or underneath the mechanism.
- Make the following checks at frequent intervals:

✻ Is the power plug abnormally hot?
✻ Are there any cracks or scrapes in the cord?
✻ Has the power plug been inserted fully into the outlet?
✻ Does something, including the copier itself, ride on the power cord?

Use an outlet with a capacity of 115/120 V, 15 A or more. 200-220 V, 20 A or more.

3-3. Grounding

- Always ground the copier to prevent receiving electrical shocks in the case of electrical leakage.
- Connect the ground wire to the ground terminal of the outlet or a grounding contact which complies with the local electrical standards.
- Never connect the ground wire to a gas pipe, the ground wire for a telephone, lightning arrester, or a water pipe for fear of fire and electrical shock.

4. PRECAUTIONS FOR USE

4-1. To ensure that the copier is used in an optimum condition

- Never place a heavy object on the copier or subject the copier to shocks.
- Insert the power plug all the way into the outlet.
- Do not attempt to remove any panel or cover which is secured while the copier is making copies.
- Do not turn OFF the copier while it is making copies.
- Provide good ventilation when making a large number of copies continuously.
- Never use flammable sprays near the copier.
- If the copier becomes inordinately hot or produces abnormal noise, turn it OFF and unplug it.
- Do not turn ON the power switch at the same time when you plug the power cord into the outlet.
- When unplugging the power cord, do not pull on the cord; hold the plug and pull it out.
- Do not bring any magnetized object near the copier.
- Do not place a vase or vessel containing water on the copier.
- Be sure to turn OFF the power switch at the end of the workday or upon power failure.
- Use care not to drop paper clips, staples, or other small pieces of metal into the copier.

4-2. Operating Environment

The operating environmental requirements of the copier are as follows.

- Temperature: 10 to 32 °C
- Humidity: 15 to 85 %
- Rate of temperature change: 10 °C/h
- Rate of humidity change: 10 %/h

4-3. Power Requirements

The power source voltage requirements are as follows.

- Voltage fluctuation: AC 115, 120, 220, 240 V
  ± 10 % (copying performance assured)
  +10 %
  -15 % (paper feeding performance assured)
- Frequency fluctuation: 50/60 Hz ± 0.3 Hz

4-4. Note

- It is prohibited to copy paper and hard currencies, government securities, and municipal bonds (even when they are stamped as “Sample”).
- For fear of infringement of copyright, it is also prohibited to copy copyrighted works, including books, music, works of art, maps, drawings, motion pictures, and photos except when the copy is to be used only personally.

5. HANDLING OF CONSUMABLES

Before using any consumables, always read the label on its container carefully.

- Paper can be easily damaged by dampness. To prevent absorption of moisture, store paper, which has been removed from its wrapper but not loaded in the drawer, in a sealed plastic bag in a cool, dark place.
- Keep consumables out of the reach of children.
- Do not touch the PC Drum with bare hands.
- The same sized paper is of two kinds, short grain and long grain. Short grain paper should only be fed through the copier crosswise, long grain paper should only be fed lengthwise.
- If your hands become soiled with toner, wash them with soap and water.
- Do not throw away any used consumables (PC Drum, starter, toner, etc.). They are to be collected.
- Do not burn, bury in the ground, or throw into the water any consumables (PC Drum, starter, toner, etc.).
- Do not store consumables in a place which:

✻ Is hot and humid.
✻ Is subject to direct sunlight.
✻ Has an open flame nearby.

6. OTHER PRECAUTIONS

Use the following precautions when performing service jobs for a copier that uses a laser.

- When a service job needs to be performed in the laser beam path, such as when working around the printerhead or PC Drum, be sure first to unplug the power cord of the copier from the outlet.
- If the job requires that the power cord be left plugged in, observe the following precautions.
- Take off your watch, ring and any other reflective object and wear laser protective goggles.
- Keep users away from the job site.
- Do not bring a highly reflective tool into the laser beam path during the service job.

7. SYSTEM OPTIONS

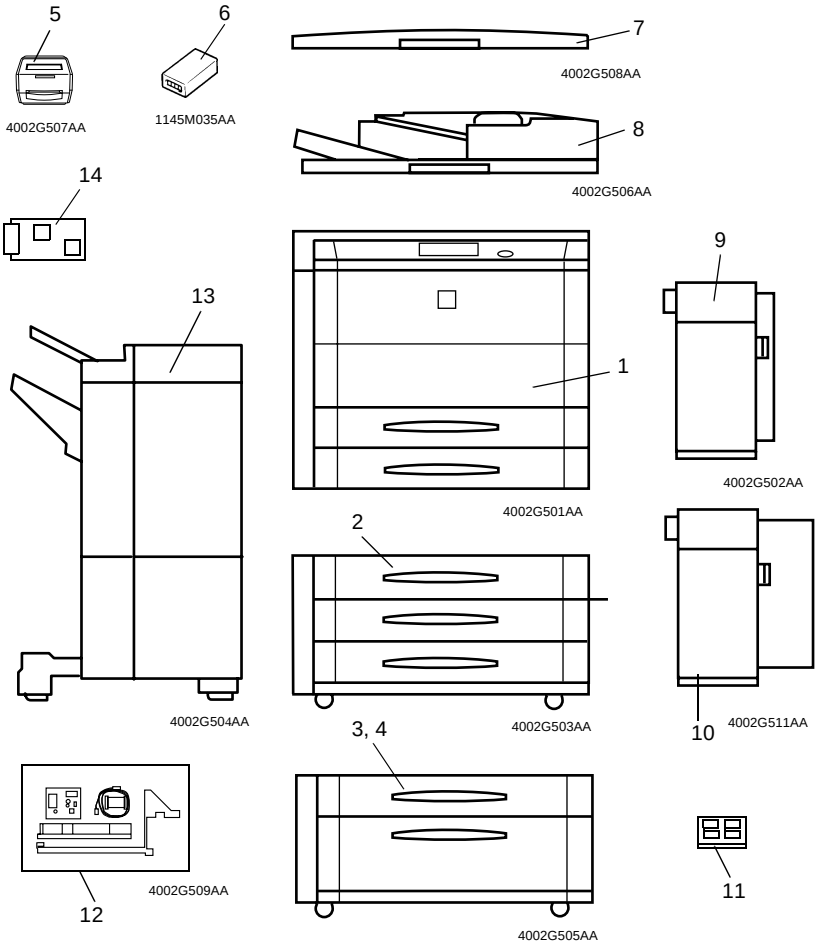

1. Copier
2. 2 Way Paper Feed Cabinet PF-208
3. Large Capacity Cassette PF-115
4. Duplexing Paper Feed Cabinet PF-7D
5. Data Controller D-103
6. Plug-In Counter
7. Electronic Document Handler EDH-3
8. Original Cover OC-1
9. Large Capacity Cassette C-306
10. Large Capacity Cassette C-306L
11. 32 MB Memory M32-2
12. Hard Disk Drive Kit HDD-1
13. Finisher FN-105, FN106
14. Data Terminal DT-105 (MC Only)

MECHANICAL/ ELECTRICAL

CONTENTS

1. CROSS SECTIONAL VIEW M-1
2. COPY PROCESS M-2
3. DRIVE SYSTEM M-4
4. SEQUENTIAL EXPLANATION M-5
5. IMAGE STABILIZATION SYSTEM M-6
   5-1. AIDC Sensor M-7
   5-2. Image Stabilization System Control M-8
6. PC DRUM SECTION M-9
   6-1. PC Drum Drive Mechanism M-9
   6-2. Grounding of the PC Drum M-10
7. PC DRUM CHARGING SECTION M-11
8. IMAGE READING SECTION M-12
   8-1. Exposure Components Section M-13
   8-2. Exposure Lamp Control M-14
   8-3. Image Processing Process M-16
   8-4. Image Density Control M-18
      (1) Auto Exposure Control M-18
      (2) Manual Exposure Control M-21
   8-5. Scanner and Mirrors Carriage Movement Mechanism M-23
      (1) Scanner Movement Mechanism M-23
      (2) 2nd/3rd Mirrors Carriage Movement Mechanism M-23
   8-6. Scanner Motor Drive Control M-24
9. MEMORY SECTION M-25
   9-1. Image Processing Process M-25
10. Original Size Detecting Section M-26
   10-1.Original Size Detecting Operation M-26
   10-2.Original Size Detecting Sensors Locations M-27
   10-3.Original Size Detection M-28
   10-4.Original Size Detection Timing M-29
11. PH SECTION M-30
   11-1.Image Processing Process M-31
   11-2.Laser Emission Timing (SOS Signal) M-33
12. DEVELOPING UNIT SECTION M-35
   12-1.Developing Unit Drive Mechanism M-36
   12-2.Sleeve/Magnet Roller M-37
   12-3.Doctor Blade M-37
   12-4.Developing Bias M-38
   12-5.ATDC Sensor M-39
      (1) ATDC Sensor Automatic Adjustment M-39
   12-6.Toner Replenishing Control M-40
   12-7.Toner Supply Hole Covering/Uncovering Mechanism M-40
   12-8.Toner Bottle Home Position Detection Mechanism M-41
   12-9.Toner Bottle Vibration Mechanism M-41
   12-10.Main Hopper Toner Replenishing Mechanism M-42
   12-11.Main Hopper Locking Mechanism M-42
   12-12.Sub Hopper Toner Replenishing Mechanism M-43

12-13.Sub Hopper Toner Empty Detecting Mechanism M-44
13. PAPER TAKE UP/FEED SECTION M-45
13-1.Drawer In Position Detection M-46
13-2.Paper Empty Detection Mechanism M-47
13-3.Drawer Paper Lifting/Lowering Mechanism M-48
13-4.Paper Level Detection Mechanism M-50
13-5.Universal Tray Paper Size Detection Mechanism M-51
13-6.Paper Take Up Mechanism M-53
(1) Paper Separating Mechanism M-53
(2) Paper Pressure Release Mechanism M-54
(3) Paper Take Up Roll Retracting Mechanism M-54
13-7.Paper Take Up Control M-55
(1) Paper Take Up Motor Control M-55
(2) Paper Take Up Retry Control M-55
(3) Paper Take Up Interval Control M-56
(4) Double Feed Paper Take Up Control M-56
13-8.Vertical Transport Drive Mechanism M-57
14. MANUAL FEED TABLE SECTION M-58
14-1.Manual Take Up Roll Pressure Mechanism M-59
14-2.Manual Feed Paper Separating Mechanism M-59
14-3.Manual Feed Paper Empty Detection Mechanism M-60
14-4.Manual Feed Take Up Control M-60
15. TRANSPORT/SYNCHRONIZING ROLLERS SECTION M-61
15-1.Paper Dust Remover M-61
15-2.Transport Roller Drive Mechanism M-62
15-3.Synchronizing Roller Drive Mechanism M-62
16. IMAGE TRANSFER AND PAPER SEPARATION SECTION M-63
16-1.PC Drum Paper Separator Fingers Section M-64
(1) Finger Pressing Detection Mechanism M-64
(2) Finger Back and Forth Detection Mechanism M-64
17. PC DRUM CLEANING SECTION M-65
17-1.Cleaning Blade Moving Mechanism M-65
17-2.Toner Conveying/Collecting Mechanism M-66
18. MAIN ERASE SECTION M-67
19. TRANSPORT SECTION M-68
20. FUSING UNIT SECTION M-69
20-1.Fusing Unit Drive Mechanism M-70
20-2.Fusing Rollers Pressure Mechanism M-71
20-3.Fusing Roller Cleaning Mechanism M-72
(1) Cleaning Web Take Up Mechanism M-72
20-4.Fusing Temperature Control M-73
20-5.Mechanism and Control of Fusing Roller Small-Amount Turning M-74
20-6.CPM Control M-75
21. EXIT/DUPLEX SWITCHING SECTION M-76
21-1.Exit/Duplex Switching Mechanism M-77
22. TURNOVER SECTION M-78
22-1.Turnover Drive Mechanism M-79

22-2.Turnover Control M-80
22-3.Turnover Roller Separation Control M-81
22-4.Turnover/Exit Mechanism M-82
(1) Selection of Turnover or Exit Path M-82
(2) Path for Accommodating Paper Longer Than A4L M-82
23. OTHER MECHANISM M-83
23-1.Memory Backup M-83
23-2.Flash Memory M-84
23-3.Dehumidifying Mechanism M-85
(1) PC Drum Dehumidifying M-85
(2) Paper Dehumidifying Mechanism M-85
23-4.Cooling Mechanism M-86
(1) IR Section Cooling Mechanism M-86
(2) Fusing Section Cooling Mechanism M-87
(3) Copier Interior Cooling Mechanism M-88
(4) Power Supply Section Cooling Mechanism M-89

1. CROSS SECTIONAL VIEW

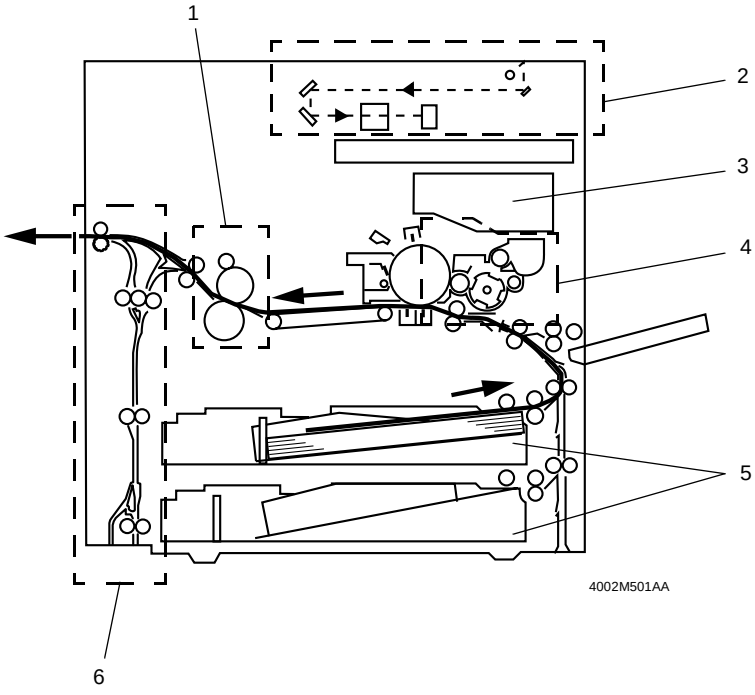

1. Fusing Section
2. IR Section
3. PH Section
4. Developing Section
5. Paper Tray
6. Exit/Turnover Section

2. COPY PROCESS

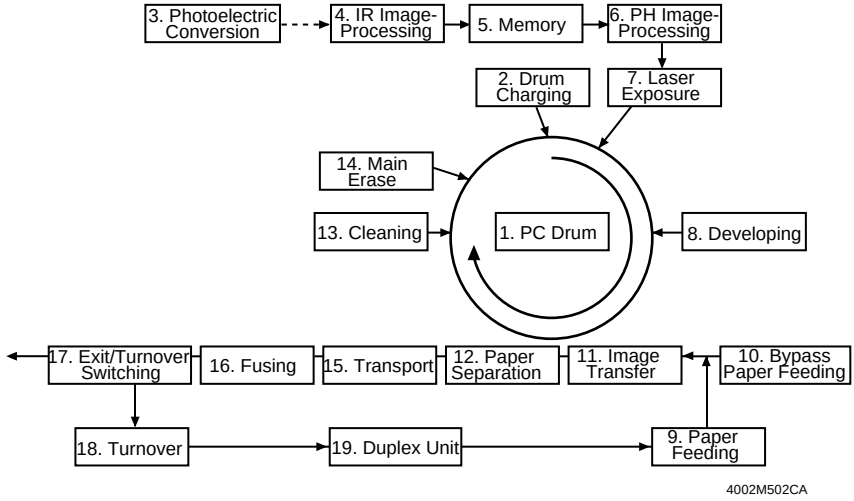

1. PC Drum
- Used as the medium on which a visible developed image of the original is formed.

2. Drum Charging
- A uniform negative DC charge is deposited across the entire surface of the PC Drum.

3. Photoelectric Conversion
- CCD converts the image data represented by light reflected off the original to a corresponding electrical signal which, in turn, is output to IR image-processing section.

4. IR Image-Processing
- The electrical signal is converted to an 8-bit digital image signal (A/D conversion) which, in turn, goes through appropriate correction before being output to the memory.

5. Memory
- The digital image signal is compressed and stored in memory. It is then output to the PH image-processing section.

6. PH Image Processing
- After going through corrections, the digital image signal is converted to a corresponding electrical signal (D/A conversion) that controls the intensity of the light from the laser diode.

7. Laser Exposure
- The laser beam strikes the surface of the PC Drum, forming an electrostatic latent image.

8. Developing
- Toner negatively charged in the Developer Mixing Chamber is attracted onto the electrostatic latent image changing it to a visible, developed image.
- An AC/DC negative bias voltage is applied to the Sleeve/Magnet Roller to prevent toner from being attracted onto those areas of the PC Drum which correspond to the background areas of the original.

9. Paper Feeding
- Paper is fed from the drawer.

10. Bypass Paper Feeding
- Paper is fed from the Bypass Table.

11. Image Transfer
- A DC positive corona emission is applied to the back side of the paper, thereby attracting toner onto the surface of the paper.

12. Paper Separation
- An AC corona and a DC negative corona emission is applied to the back side of the paper to neutralize the paper, while the PC Drum Paper Separator Fingers mechanically remove the paper from the surface of the PC Drum.

13. Cleaning
- Residual toner on the surface of the PC Drum is scraped off.

14. Main Erase
- Light is directed to the surface of the PC Drum to neutralize any surface potential remaining there after cleaning.

15. Transport
- The paper is fed to the Fusing Unit.

16. Fusing
- The developed image is permanently fused to the paper by a combination of heat and pressure applied by the Upper and Lower Fusing Rollers.

17. Exit/Turnover Switching
- The paper is either fed out onto the Exit Tray or into the turnover mechanism.

18. Turnover
- The 1-sided copy is turned over and fed into the Duplex Unit.

19. Duplex Unit
- The 1-sided copies are fed through this unit before being subjected to the second copy cycle.

3. DRIVE SYSTEM

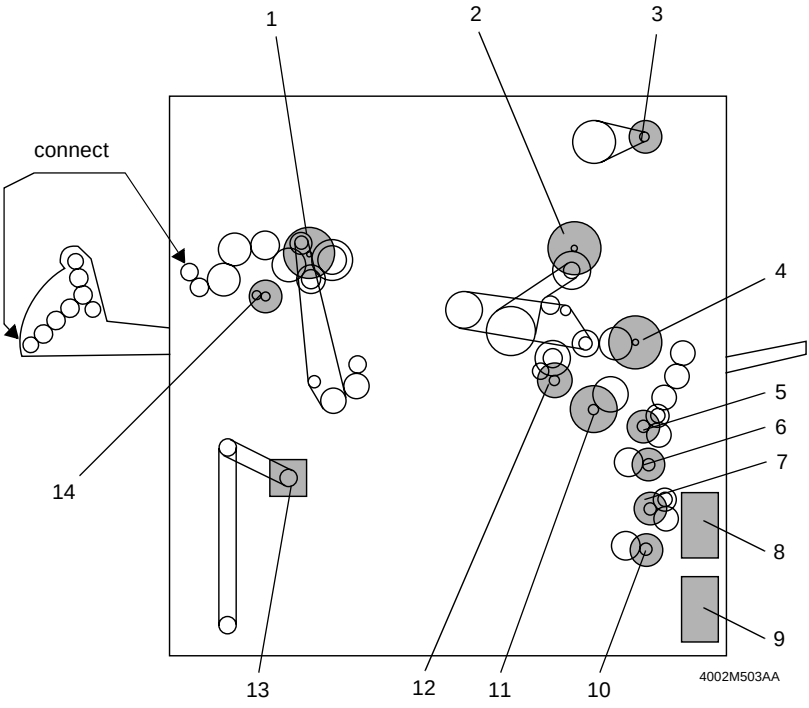

1. Fusing Motor (M2)
2. PC Drum Drive Motor (M21)
3. Scanner Motor (M51)
4. Developing Unit Drive Motor (M1)
5. Upper Vertical Transport / Manual Feed Motor (M6)
6. 1st Drawer Paper Take-Up Motor (M4)
7. Lower Vertical Transport Motor (M7)
8. 1st Drawer Lift-Up Motor (M11)
9. 2nd Drawer Lift-Up Motor (M12)
10. 2nd Drawer Paper Take-Up Motor (M5)
11. Transport Roller Motor (M8)
12. Synchronizing Roller Motor (M9)
13. Turnover Motor (M10)
14. Cleaning Web Drive Motor (M24)

4. SEQUENTIAL EXPLANATION

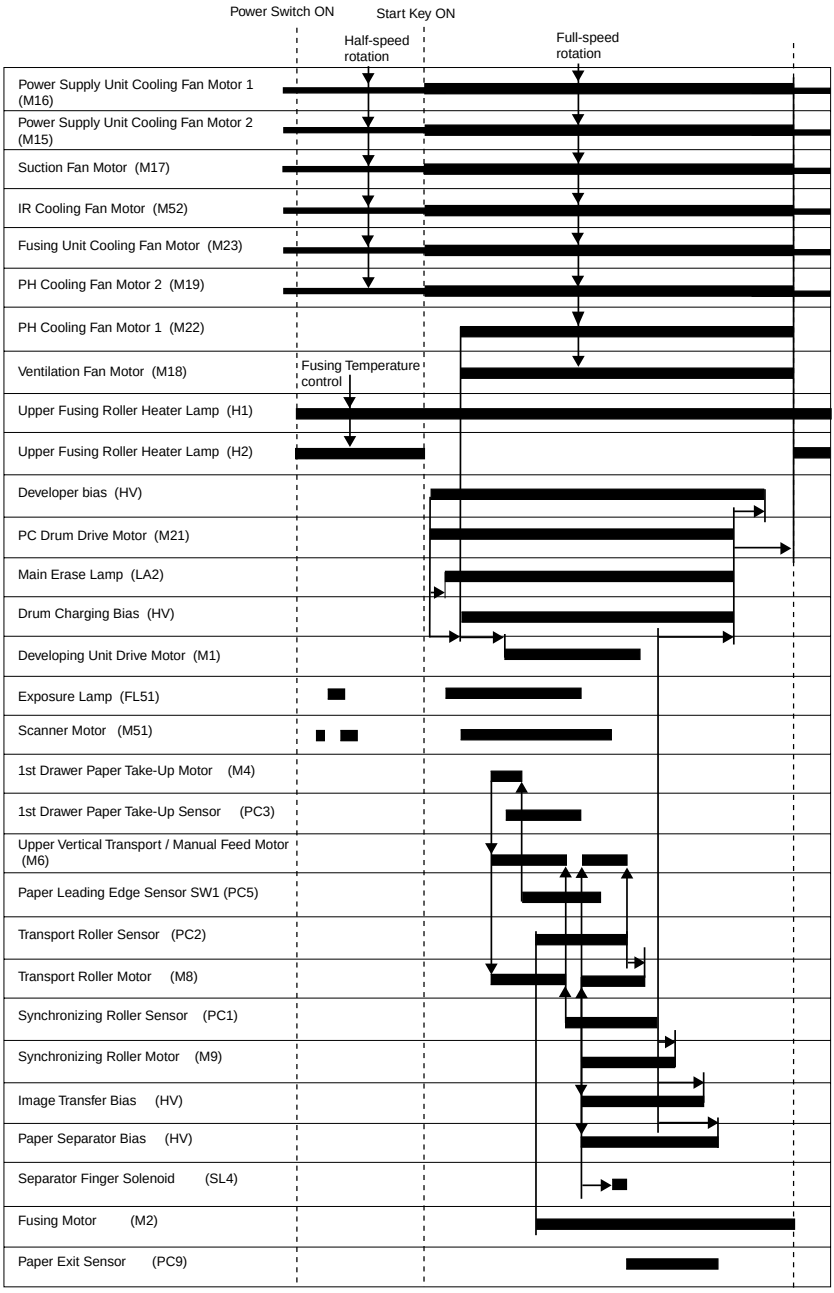

4002M601CA

5. IMAGE STABILIZATION SYSTEM

The following image stabilization controls are provided to ensure stabilized copy image.

Item	Purpose	Method
Initial Setup	First correct for AIDC sensor disparity and contamination. Then use ΔV control to set initial values for grid voltage (Vg) and developer bias (Vb).	Set initial values for grid voltage (Vg) and developer bias (Vb).
Short-Term Correction	Correct for ID drop caused by change in drum sensitivity.	Perform ΔV control after every 100 copies.
Long-Term Correction	Correct for drop in surface potential (surface fogging) caused by drum deterioration.	Correct Vg based on cumulative hours of drum rotation.
Morning Correction (first run each morning)	Correct for ID drop caused by low drum sensitivity when copier is first power switch is turned ON (before copier is fully warmed up).	AIDC sensor contamination, use ΔV control to correct the grid voltage (Vg) and developer bias (Vb).
Correction After Prolonged Non-Use	Correct for ID change caused by change in drum sensitivity due to non-usage for at least two hours in the standby state.	When START key is pressed, use ΔV control to correct Vg and Vb before making the copy.
T/C Correction	Maintain the developing unit's T/C ratio at a constant level.	Use ATDC to control the toner resupply

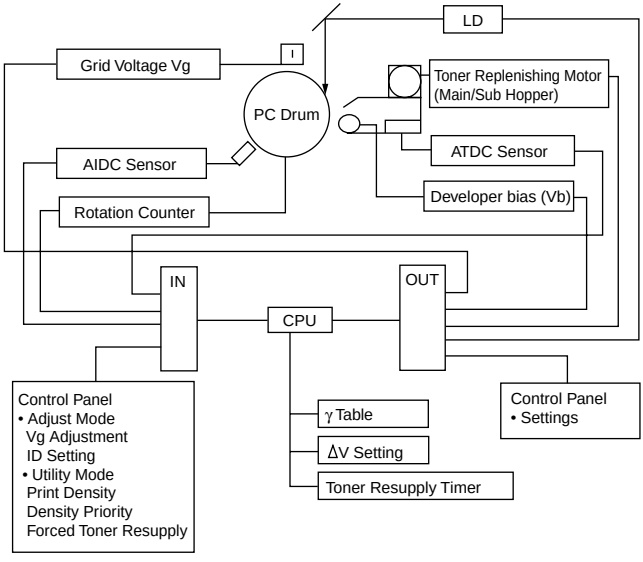

4002M505CB

5-1. AIDC Sensor

The AIDC Sensor is used to detect the toner density and background level on the PC Drum.

1. An LED projects infrared light onto the surface of the PC Drum.
2. A phototransistor detects the intensity of infrared light reflected off the surface of the PC Drum.
3. The phototransistor outputs a voltage corresponding to the intensity of the light reflected back.

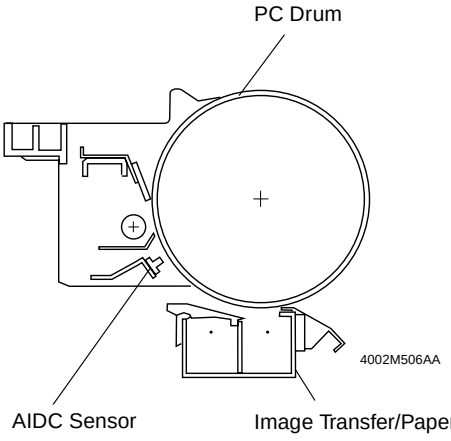

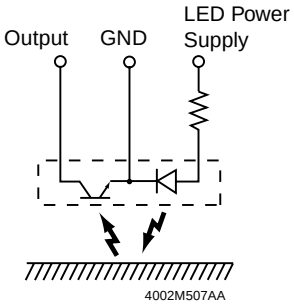

Toner Density on PC Drum	Light reflected	Output Voltage
High	Small	High
Low	Large	Low

5-2. Image Stabilization System Control

1. AIDC Sensor Coarse Adjustment

- The following adjustment is made to prevent the AIDC Sensor output voltage from deviating from the specified range due to part-to-part variations in the AIDC Sensor (installation, circuit, deterioration, etc.).
- The load resistance value is set with the 4-bit analog switch so that the AIDC Sensor output voltage becomes approximately 1volt in terms of the background level to be erased.

2. AIDC Sensor Fine Adjustment

- The following adjustment is made to prevent the AIDC Sensor output voltage from being varied by toner or other contamination of the sensor.
- The LED current value of the AIDC Sensor is varied so that the AIDC Sensor output voltage becomes 1 volt in terms of the background level to be erased.

CONTROLLED PART	CONTROL SIGNAL	WIRING DIAGRAM
AIDC Sensor	PWB-A PJ7A-7B	4-D

3. ΔV Control

- Drum deterioration and environmental factors may lead to a drop in drum sensitivity and drum surface potential, resulting in ID loss.
- To correct for this, grid voltage (Vg) and bias voltage (Vb) are adjusted to bring the AIDC sensor output voltage into the range between 4.40 V (lighter) to 4.45 V (darker).

4. Grid Voltage Control (Vg)

- This control corrects for a loss in drum surface potential caused by drum deterioration (loss of surface material). Correction is made by increasing the Vg by 1 step after 50 hours of drum rotation.

CONTROL	CONTROL VALUE	INITIAL VALUE
Grid voltage	–366 V to –924 V	–600 V

6. PC DRUM SECTION

The PC Drum consists of layers of semiconductive materials placed on an aluminum alloy base, on which an electrostatic latent image is formed.

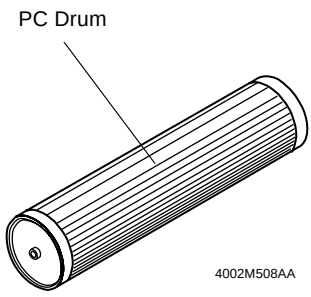

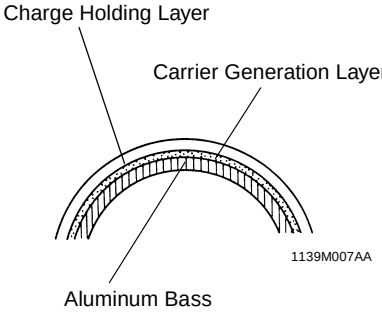

6-1. PC Drum Drive Mechanism

- The PC Drum is rotated by drive from a motor.
- The flywheel mounted on the drum shaft functions to smooth out power surges occurring due to backlash in gears.

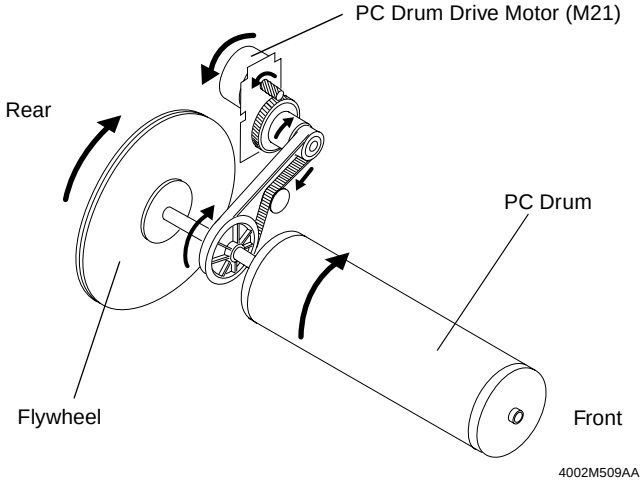

CONTROLLED PART	CONTROL SIGNAL	ON	OFF	WIRING DIAGRAM
M21	PWB-A PJ7A-3A	L	H	4-C

6-2. Grounding of the PC Drum

The potential on the surface of the PC Drum exposed to the light is grounded to the frame.

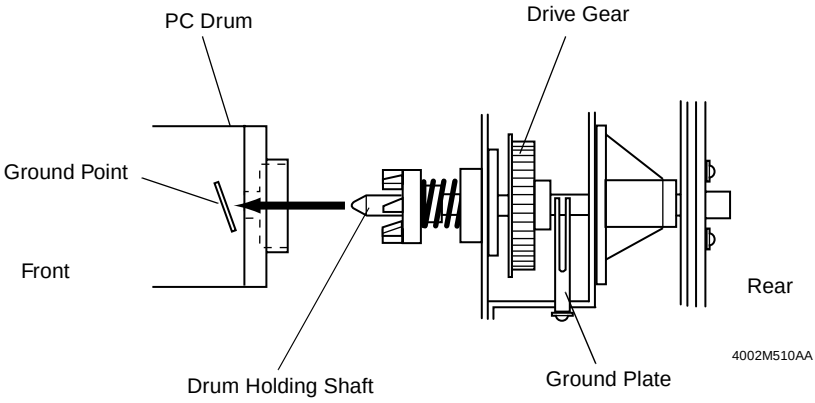

7. PC DRUM CHARGING SECTION

- The PC Drum Charge Corona has a scorotron grid to deposit a charge evenly across the surface of the PC Drum.
- The corona unit has a comb electrode that discharges only toward the grid mesh, thus minimizing the amount of ozone produced.
- The grid voltage applied to the grid mesh is varied to select between the Normal and Photo mode.

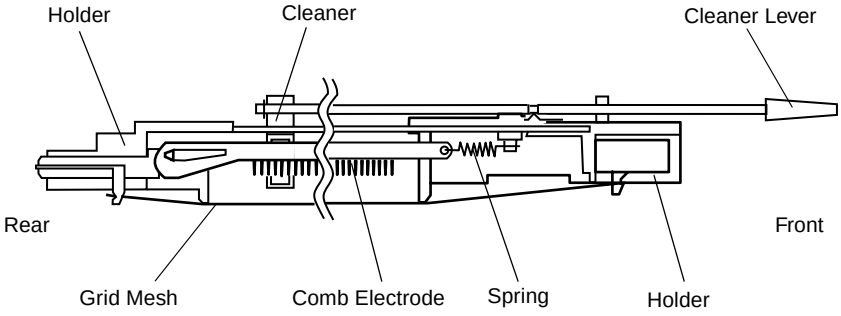

	CONTROL SIGNAL	ON	OFF	WIRING DIAGRAM
PC Drum Charger	PWB-A PJ12A-9B	L	H	5-F

8. IMAGE READING SECTION

Light is projected onto the surface of the original and the light reflected off the original is converted to a corresponding electrical signal.

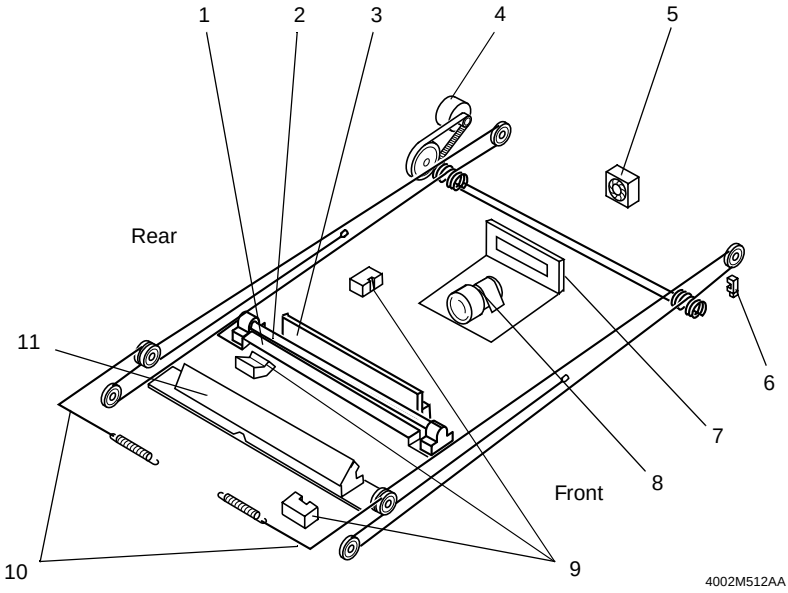

1. Scanner
2. Exposure Lamp (FL51)
3. Inverter
4. Scanner Motor (M51)
5. IR Cooling Fan Motor (M52)
6. Scanner Reference Position Sensor (PC51)
7. CCD Board (PWB-IA)
8. Lens
9. Original Size Detecting Sensor
10. Scanner Drive Cable
11. 2nd/3rd Mirror Carriage

8-1. Exposure Components Section

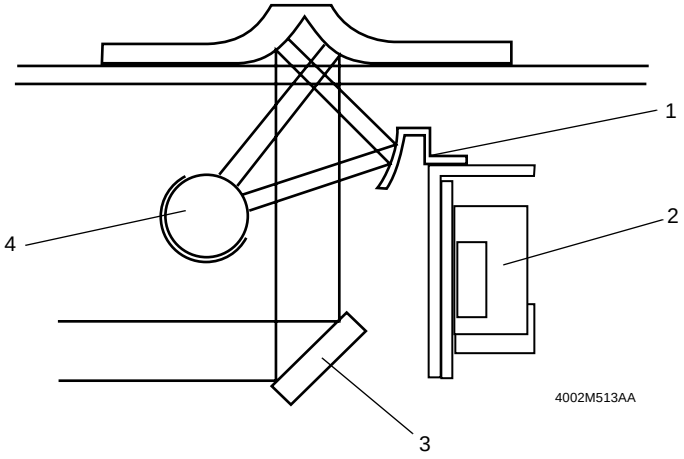

1. Auxiliary Reflector:
   Reflects light onto the areas that the Exposure Lamp cannot illuminate when an original does not lie flat on the Original Glass (such as a book). It reduces shadows that would otherwise be transferred to the copy.
2. Inverter:
   Changes DC into AC to turn ON the Exposure Lamp.
3. Mirror #1:
   Directs the reflected light from the original over to Mirror #2.
4. Exposure Lamp:
   A fluorescent lamp is used to illuminate the original.

8-2. Exposure Lamp Control

Control to turn ON and OFF the Exposure Lamp is provided by an Exposure Lamp Remote signal output from PWB-B

✻ Operation when Power Switch is switched ON

1. The Scanner moves to, and stops at, the shading position.
2. Automatic adjustment of clamp level: Sets the black level when scanning an image.
3. The Exposure Lamp turns ON
4. Automatic adjustment of gain: Sets the maximum white level.
5. The Scanner returns to its home position.
6. The Scanner moves to the shading position to make a shading correction.
7. The Scanner returns to its home position.
8. A black line check is made (only the copier equipped with an EDH). *1
9. The Exposure Lamp turns OFF.

*1: Black line check

1. Check that the EDH is lowered.
2. The Scanner moves to, and stops at, the shading position.
3. While returning to the home position, the Scanner checks the EDH scanning range for dust and scratches that could cause a black line.
4. If any dust or scratches are found, the copier gives a warning message.

✻ Operation when the Start key is pressed (EDH scanning)

1. The Exposure Lamp turns ON
2. The Scanner starts moving to the shading position.
3. A gain adjustment and a shading correction are made at the shading position.
4. The Scanner moves to the original scanning position and starts reading the original.
5. After having read the original, the Scanner moves to the home position.

Clamp level	:	Sets the black level when scanning an image.
Gain	:	Sets the maximum white level.

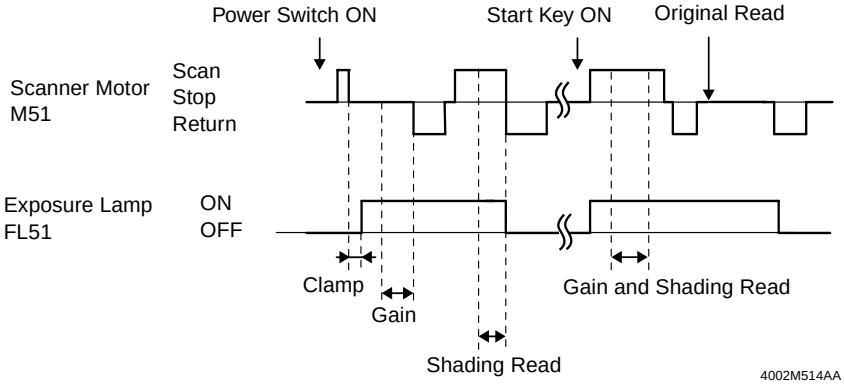

	CONTROL SIGNAL	ON	OFF	WIRING DIAGRAM
M51	PWB-IC PJ3IC-1~3	Pulse Output		10-A

	CONTROL SIGNAL	ON	OFF	WIRING DIAGRAM
FL51	PWB-B PJ5B-1	L	H	17-F

8-3. Image Processing Process

The IR image processing system is composed of the following blocks. These blocks implement various types of corrective processing.

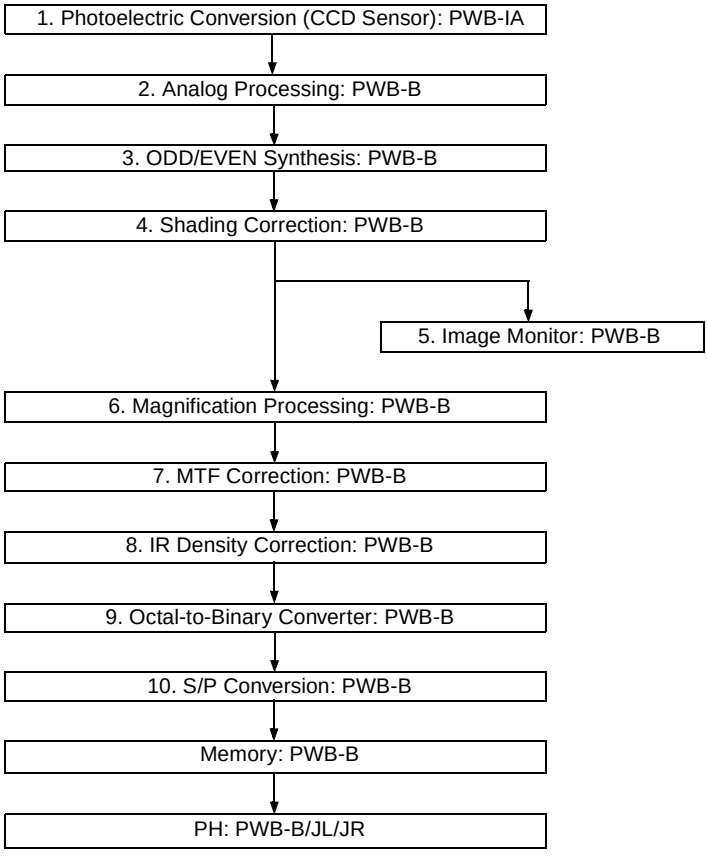

1. Photoelectric Conversion (CCD Sensor): PWB-IA
   Light from the Exposure Lamp reflects off the original, passes through mirrors and one lens, and reaches the CCD sensor. The CCD sensor converts the optical data into analog electrical signals.
2. Analog Processing: PWB-B
   This block eliminates noise from the (ODD and EVEN) analog signals output by the CCD sensor, then converts the result into (ODD and EVEN) 8-bit digital image signals (A/D conversion).
3. ODD/EVEN Synthesis: PWB-B
   This block synthesizes the ODD and EVEN signals received from the preceding block into a single image-data signal.
4. Shading Correction: PWB-B
   Corrects shading error introduced by factors such as sensitivity differentials among CCD sensor pixels, uneven Exposure Lamp light distribution, and uneven lens shading.
5. Image Monitor: PWB-B
   Monitors the image data. Generates a histogram of the image data, for use during EE/gain adjustment.
6. Magnification Processing: PWB-B
   Adjusts the image in accordance with the edit function setting (Enlarge/Reduce) made at the control panel.
7. MTF Correction: PWB-B
   Reduces the image noise contained in the image density data, smooths the image, adds emphasis to borders of characters and lines, and adds sharpness.
8. IR Density Correction: PWB-B
   Corrects the gradation of the image density data, in accordance with the image quality mode and copy density set at the control panel, so as to produce optimal density and image quality.
9. Octal-to-Binary Converter: PWB-B
   Converts image density data from 8-bit data to 1-bit data, using an error-dispersing binarization method.
10. S/P Conversion: PWB-B
    Converts the binarized image-density data into a 4-bit parallel signal, and transmits this signal to the memory section.

8-4. Image Density Control

(1) Auto Exposure Control

- Auto Exposure Control varies the background removal threshold in accordance with the original type (newspaper, photograph, etc.). This helps ensure that only the fogging component in the low-density areas is removed, while retaining the image density of the characters and other high-density areas of the image.
- The IR Density Correction section uses the sampled image data to determine the type of the original by the following method.

Scanning original fed through EDH	:	Realtime scanning
Multi Bypass Table	:	Scanning during prescan motion

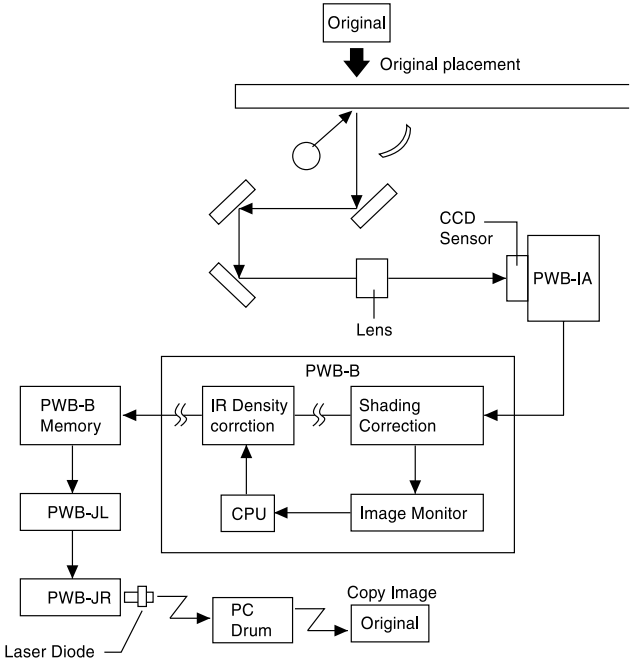

4002M515CA

✻ Setting of the Image Density Level

- The user can select the image density level from among three (Light, Normal, and Dark) by using a User's Choice function.
- The Auto Exposure mode can be used only in the Text mode. While, the Manual Exposure mode can be used in all modes of Text, Text/Photo, and Photo.

1. Scanning Original fed through EDH

✻ Realtime Scanning

- Realtime scanning is a method in which the image data is sampled during a copy cycle.
- The sampled image data is accumulated in the form of a reflectivity histogram. This histogram is used to determine the type of the original and the background removal threshold is calculated as may be necessary.

✻ Reflectivity and Histogram

- The reflectivity histogram prepared by the CPU of the Auto Exposure Control section is a chart for displaying the distribution of the image data readings.
- The reflectivity distribution varies for different types of originals. This copier uses the peak value (*1) of this histogram to compute the best possible background removal threshold.

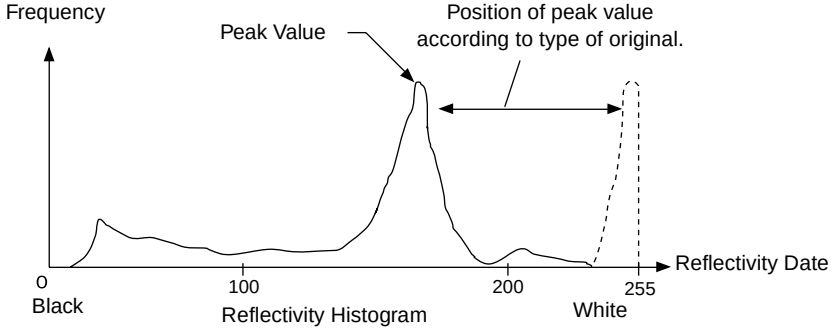

*1: The peak value represents the density of the original's background. For a two-tone B&W image (such as a word-processor document), where the background is white, the peak would appear all the way to the right, as shown by the dotted line in the above illustration. For a newspaper, which is characterized by a somewhat darker background, the peak would appear at about the position shown by the solid line in the above chart

2. Scanning Original Placed on Glass

✻ Scanning during prescan motion

- This is a method in which image data is sampled while the Scanner makes a prescan motion.
- The sampled image data is accumulated in the form of a reflectivity histogram which is used to calculate the background removal threshold corresponding to the entire surface of the original.

✻ Given below is the control flow when the Auto Exposure mode is selected.

Start Key ON

Scanning original fed through EDH

<Realtime scanning>
The Scanner starts reading the original.
(The copy cycle is started.)

Scanning original placed on glass Document

<Scanning during prescan motion>
The Scanner starts reading the original as it starts moving to the original scanning position.
(Prescan motion is started.)

The image data read by the CCD sensor is transmitted (in parallel) from the Shading Correction block to the Histogram block, where the data values are sampled, and the samples are counted in order to generated the reflectivity histogram.

The CPU determines the type of the original based on the histogram, and sets the removal threshold accordingly.

The CPU transmits the threshold value to the IR Density Correction block. This block then corrects the image density of incoming data in accordance with the relation shown below.

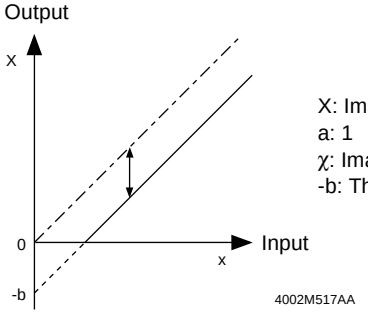

$X=a\chi-b$

X: Image density value after density correction
a: 1
χ: Image density value before density correction
-b: Threshold (intercept)

The gradation curve of the density-corrected data is adjusted in accordance with the Image Quality mode so as to enhance the reproduction of the high-density areas.

The above processing helps retain density detail within characters and other high-density areas, while removing the fogging component from the low-density areas.

(2) Manual Exposure Control

- Manual Exposure Control selects an exposure level variable in nine steps according to the setting made on the control panel by the user when the copier is in the Manual Exposure mode.
- According to the manual exposure setting made on the control panel, the CPU of PWB-B transmits a background removal threshold to the IR Density Correction block for density correction. This background removal threshold has been predetermined according to the manual exposure setting.

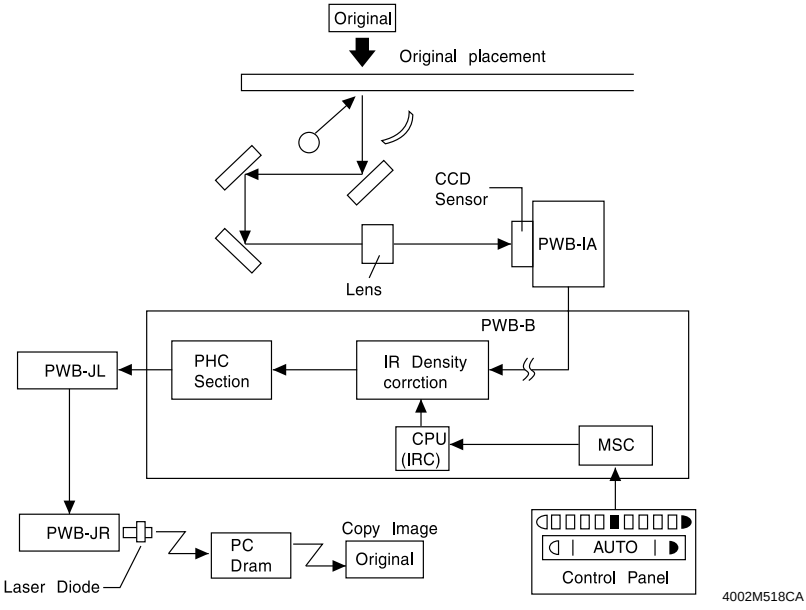

✻ The control flow during manual density mode is described below.

The user selects the Manual Exposure mode on the Touch Panel and sets the exposure level manually.

↓

The exposure level data is transmitted from MSC via IRC to the Image Processing Board.

↓

The IRC on the Image Processing Board finds the background removal threshold value that corresponds to the exposure level setting.

↓

Next page

Before page

The threshold value is transmitted from the IRC to the IR Density Correction block. This block then corrects the image density of incoming data in accordance with the relation shown below.

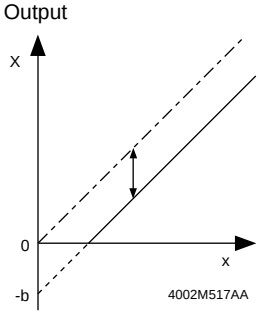

$X=a\chi-b$

X: Image density value after density correction
a: 1
χ: Image density value before density correction
-b: Threshold (intercept)

For all quality modes other than “Photo,” the gradation curve of the density-corrected data is adjusted in accordance with the Image Quality mode so as to enhance the reproduction of the high-density areas.
If the Image Quality mode is set to “Photo,” however, the gradation curve is designed to promote image smoothness, even density, and low noise. In this case, the curve is adjusted in accordance with the manual density setting, as illustrated below.

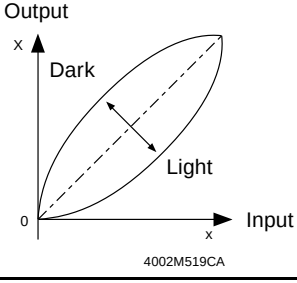

The above processing enables the user to select copy density effectively for any of the image quality modes.

8-5. Scanner and Mirrors Carriage Movement Mechanism

(1) Scanner Movement Mechanism

- The Scanner is driven by the Scanner Motor at a speed appropriate to the set zoom ratio with reference to the speed in the full size mode.
- The Scanner is detected at its home position by the Scanner Reference Position Sensor.

(2) 2nd/3rd Mirrors Carriage Movement Mechanism

The 2nd/3rd Mirrors Carriage moves at a speed half that of the Scanner, thereby keeping constant the optical path length between the original and the CCD Sensor.

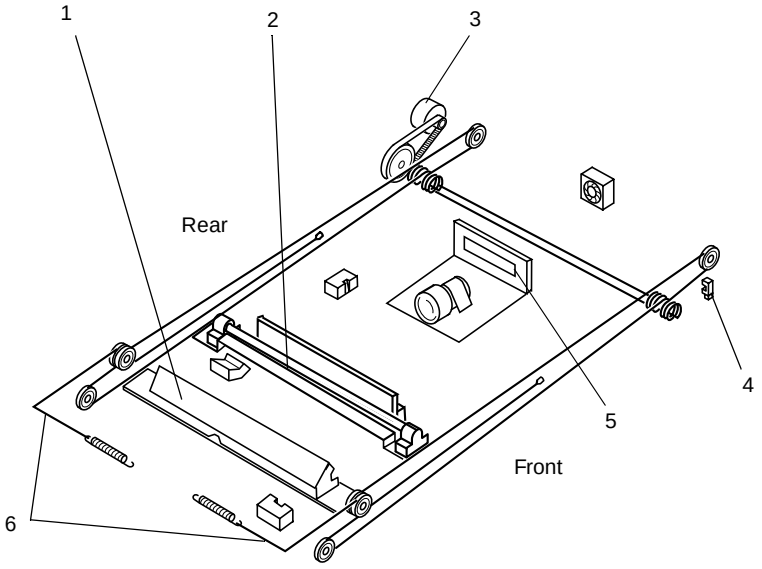

1. 2nd/3rd Mirror Carriage
2. Scanner
3. Scanner Motor (M51)
4. Scanner Reference Position Sensor (PC51)
5. CCD Sensor
6. Scanner Drive Cable

8-6. Scanner Motor Drive Control

- The speed at which the Scanner is moved is controlled by varying the period of the motor drive pulse that is timed with the reference clock.

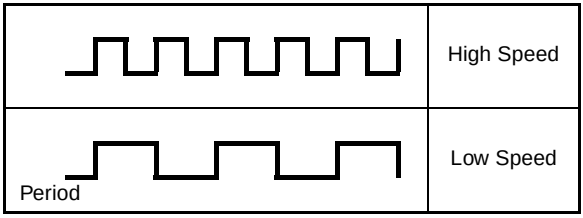

- The distance over which the Scanner travels is controlled by the number of motor drive pulses that correspond to each paper size and zoom ratio.

	CONTROL SIGNAL	ON	OFF	WIRING DIAGRAM
M51	PWB-IC PJ3IC-1~3	Pulse Output		10 -A

9. MEMORY SECTION

The Memory section stores the image density data output from the IR section to effectively carry out data transmission to the Printer section.

9-1. Image Processing Process

The binary image data transmitted from the Image Processing Board of the IR section undergoes the following processes before being transmitted to the PH section.

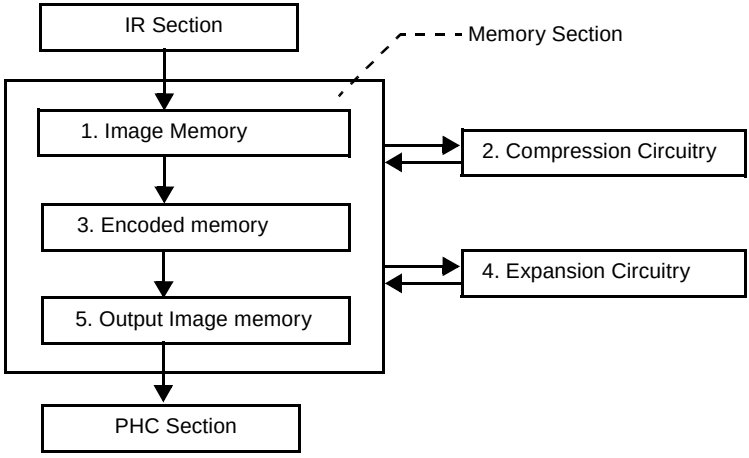

1. Input Image Memory
- Stores binary image data.
- Consists of SDRAM, and is capable of storing about one A5 page of copy data.

2. Compression Circuitry
- Reads the binary data from the Image Memory block, one line at a time, and further compresses it.
- Use of this compression step makes it possible for the next block (Encoded Memory block) to hold data.

3. Encoded Memory
- Stores the encoded (compressed) data received from the previous block.
- Consists of SDRAM. Capable of holding data for up to about 100 pages of standard A4 originals.

4. Expansion Circuitry
- Performs image rotation, shift, erase, and other editing functions for subsequent output to the printer.

5. Output Image Memory
- Stores the expanded image data. It is then output to the PHC section.

10. Original Size Detecting Section

The original size detecting sensors fixed in the optical section are used to determine the size of the original in the Auto Paper or Auto Size mode.

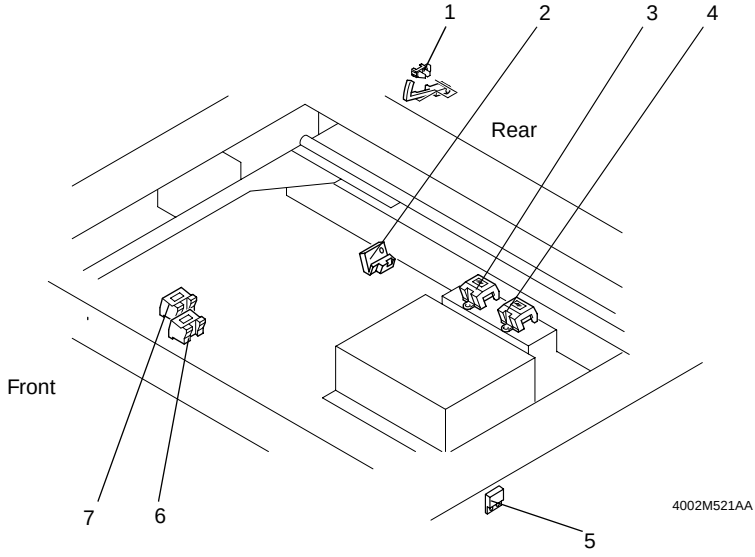

1. Original Cover Detecting Sensor PC52
2. Original Cover Detecting Sensor FD1 PC53
3. Original Cover Detecting Sensor FD2 PC54
4. Original Cover Detecting Sensor FD3 PC55
5. Size Reset Switch S51
6. Original Cover Detecting Sensor CD2 PC57
7. Original Cover Detecting Sensor CD1 PC56

10-1. Original Size Detecting Operation

Each photo receiver of the original size detecting sensors responds to the light, which is emitted by the corresponding LED and reflected off the original, of a given level of intensity. If the intensity of the reflected light exceeds the given level, the size detecting board determines that there is an original.

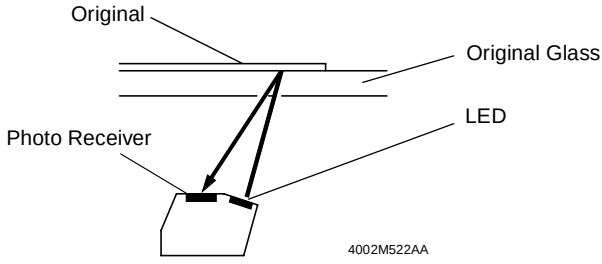

10-2. Original Size Detecting Sensors Locations

- The original size detecting sensors are located in the following positions to enable them to detect different sizes of the original.
- Adding optional original size detecting sensors increases the number of original sizes that can be detected by the system.

	FD1	FD2	FD3	CD1	CD2
Metric Areas	Standard	Standard	Optional	Standard	Optional
Inch Areas	Optional	Standard	Optional	Standard	Optional

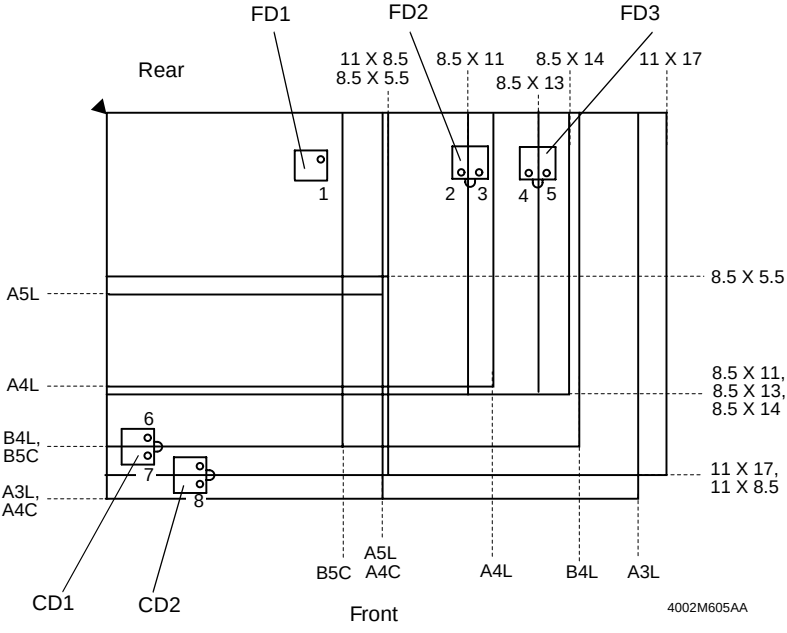

✻ FD2, FD3 Sensor Locations

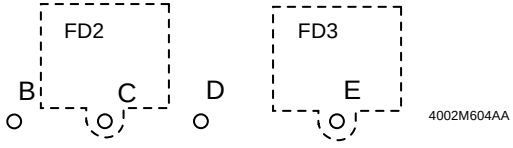

10-3. Original Size Detection

The Original Size Detecting Board determines the correct original size based on the combination of statuses of the original, either present or absent, as detected by the original size detecting sensors.

✻ Metric Area

Original Size	Need Optional Sensors	FD1	FD2		FD3 (Optional)		CD1		CD2 (Optional)
		1	2	3	4	5	6	7	8
A3L	No	●	●	●	(●)	(●)	●	●	(●)
B4L	No	●	●	●	(●)	(●)	●	-	(-)
A4L	No	●	●	●	(●)	(-)	-	-	(-)
A5L	No	●	-	-	(-)	(-)	-	-	(-)
A4C	No	●	-	-	(-)	(-)	●	●	(●)
8.5 × 11	No	●	●	-	(-)	(-)	-	-	(-)
11 × 17	Yes	●	●	●	(●)	(●)	●	●	(-)
8.5 × 14	Yes	●	●	●	(●)	(●)	-	-	(-)
8.5 × 13	Yes	●	●	●	(●)	(-)	-	-	(-)
11 × 8.5	Yes	●	-	-	(-)	(-)	●	●	(-)

●: Original Present -: Original Not Present ( ): Optional Sensor are Mounted

✻ Inch Area - Standard

Original Size	Need Optional Sensors	FD1 (Optional)	FD2		FD3 (Optional)		CD1		CD2 (Optional)
		1	2	3	4	5	6	7	8
11 × 17	No	(●)	●	●	(●)	(●)	●	●	(-)
8.5 × 14	No	(●)	●	●	(●)	(●)	-	-	(-)
8.5 × 11	No	(●)	●	-	(-)	(-)	-	-	(-)
11 × 8.5	No	(●)	-	-	(-)	(-)	●	●	(-)
B4L	No	(●)	●	●	(●)	(●)	●	-	(-)
B5C	No	(●)	-	-	(-)	(-)	●	-	(-)
8.5 × 13	Yes	(●)	●	●	(●)	(-)	-	-	(-)
8.5 × 5.5	Yes	(●)	-	-	(-)	(-)	-	-	(-)
A3L	Yes	(●)	●	●	(●)	(●)	●	●	(●)
A4L	Yes	(●)	●	●	(-)	(-)	-	-	(-)
A4C	Yes	(-)	I	I	(●)	(●)	I	I	(●)

●: Original Present -: Original Not Present ( ): Optional Sensor are Mounted

10-4. Original Size Detection Timing

1	Takes size readings	When the Original Cover is raised to an angle of 15° or more (Original Cover Detecting Sensor is deactivated).
2	Affirms size readings	When the Original Cover is lowered to an angle of 15° or less (Original Cover Detecting Sensor is just activated) and the Size Reset Switch is actuated. Or, when the Start key is pressed with the Original Cover Detecting Sensor in the deactivated state.
3	Resets size readings	When the Original Cover is raised and the Size Reset Switch is just deactuated from actuated state.
4	Unable to take size readings	A notice is given to the user if the Start key is pressed with the Original Cover not raised to an angle of 15° or more in a size reset condition.

✻ :Numbers 1 through 4 are enabled when the EDH is mounted; only numbers 1 and 2 are enabled when the Original Cover is mounted.

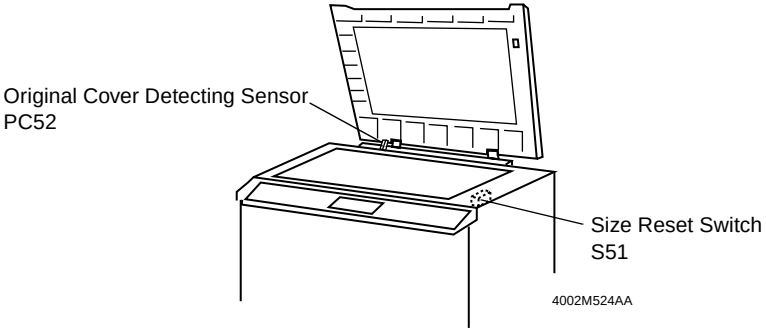

	CONTROL SIGNAL	Blocked	Unblocked	WIRING DIAGRAM
PC52	PWB-B PJ5B-2	L	H	13 - C

	CONTROL SIGNAL	ON	OFF	WIRING DIAGRAM
S51	PWB-B PJ306B-7	H	L	7 - I

11. PH SECTION

Image data sent from the memory section is corrected and, based on the corrected data, a laser light is projected onto the surface of the PC Drum to form a corresponding latent image.

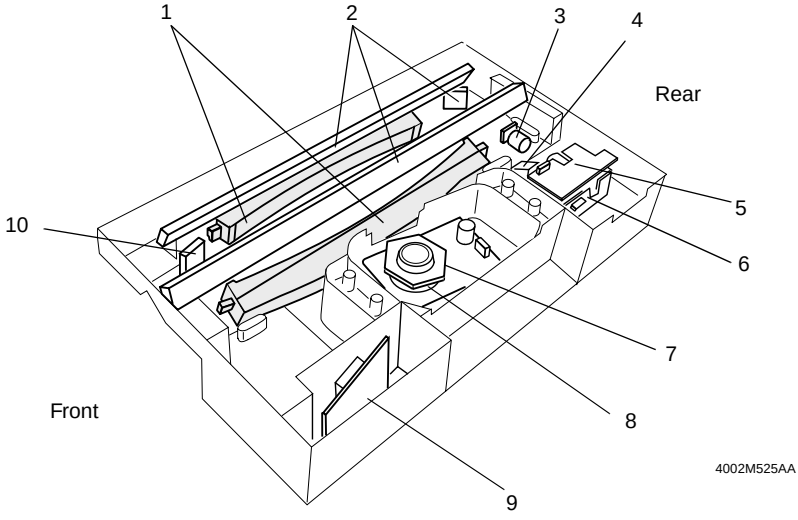

1. Lenses
2. Return Mirror
3. Cylindrical Lens
4. Beam Interval Correction Motor (M20)
5. LD Drive Board R (PWB-JR)
6. LD Drive Board L (PWB-JL)
7. Polygon Mirror
8. Polygon Motor (M3)
9. SOS Sensor Board (PWB-JS)
10. SOS Mirror

11-1. Image Processing Process

The PH image processing system is composed of the following blocks. These blocks implement a variety of types of corrective processing, as described below.

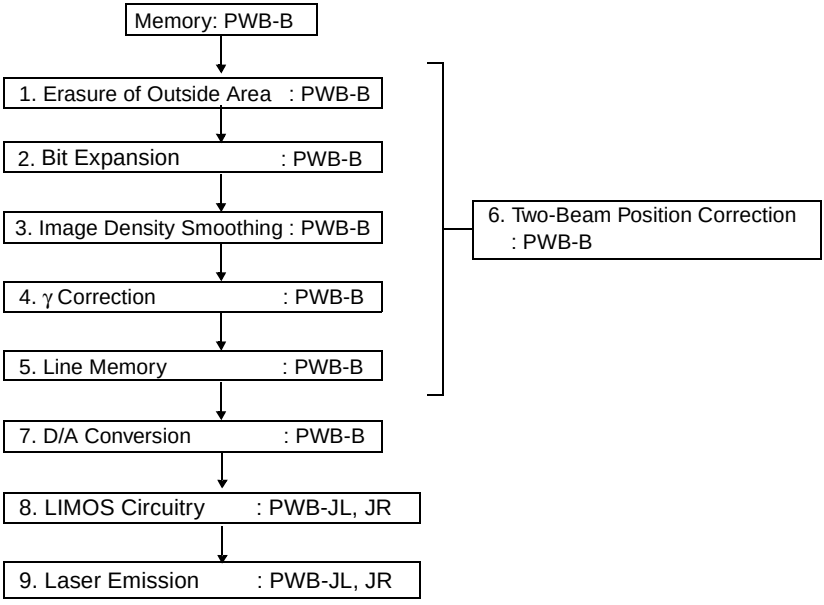

1. Erasure of Outside Area: PWB-B
   Erases the area outside of the image area, so as to prevent firing of the laser over non-image areas.
2. Bit Expansion: PWB-B
   If image quality is set to photo mode, this block expands binary data values into 8-bit data values. (If image quality is set to the Text mode, the block outputs binary image density data values without change.)
3. Image Density Smoothing: PWB-B
   The edge data is filtered in the Text mode and data is converted, thereby reducing jaggies that would otherwise occur along the edges.
4. γ Correction: PWB-B
   Adjusts data so that the copied image's gradation characteristics will be proportional to the gradation characteristics of the original. Adjustment is made by selecting the appropriate gamma look-up table, then using the table data to convert image density values into appropriate laser intensity values.
5. Line Memory: PWB-B
   Corrects for differences in data transfer frequency with respect to PH line memory.
6. Two-Beam Position Correction: PWB-B
   The amount of positional deviations in the main and sub scanning directions of the two laser beams is detected to make the necessary corrections.

- Main scanning direction: Correction is made by advancing or retarding the laser emission start timing signal.
- Sub scanning direction: Correction is made by turning the stepping motor of the PH.

7. D/A Conversion: PWB-B
   Converts the 8-bit laser intensity data values into analog laser intensity voltages.
8. LIMOS Circuitry: PWB-JL, JR
   Activates the APC (Auto Power Control) function that controls the current flowing through the LD for each line; activates the ACC (Auto Current Control) function that stabilizes the drive current for each dot.
9. Laser Emission: PWB-JL, JR

- Fires laser onto PC drum in accordance with the emission level given by the LIMOS block.
- The copier employs 2 laser beams, and therefore prints two lines at a time.

11-2. Laser Emission Timing (SOS Signal)

The laser diode is forced to turn ON to project the laser beam onto the SOS Sensor Board, which generates an SOS signal.

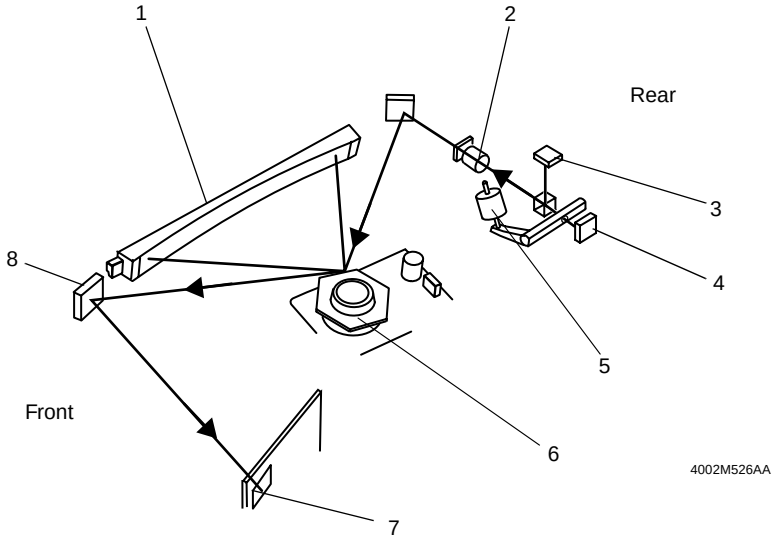

1. Lens
2. Cylindrical Lens
3. LD Drive Board R (PWB-JR)
4. LD Drive Board L (PWB-JL)
5. Beam Interval Correction Motor (M20)
6. Polygon Mirror
7. SOS Sensor
8. SOS Mirror

✻ Relation between laser emission timing and SOS signal

The light path of the laser beam changes as the Polygon Mirror turns. The SOS signal synchronizes the rotation of the Polygon Mirror with the laser emission timing.

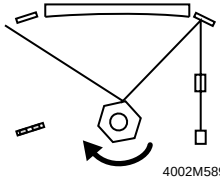

4002M589AA

A. LD force-ON
The laser diode is forced ON to output an SOS signal.

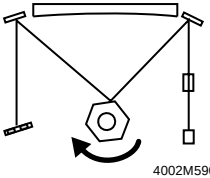

4002M590AA

B. SOS signal output
A laser beam strikes the SOS Sensor Board and sensor A determines the SOS signal output timing.
After the timing has been determined, the laser beam is turned OFF.

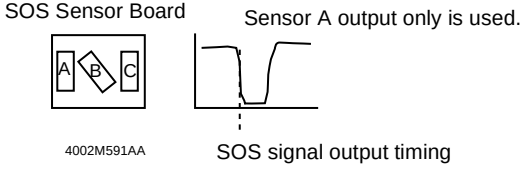

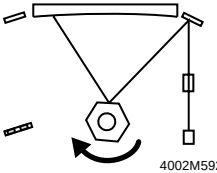

4002M592AA

C. Start of image data output
The laser emission start timing is controlled according to the size of the image to be output.

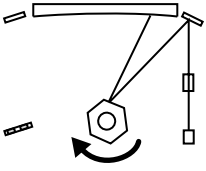

4002M593AA

D. End of image data output
The laser radiation area is controlled according to the size of the image to be output.
After the image area has been covered, the laser beam is turned OFF.

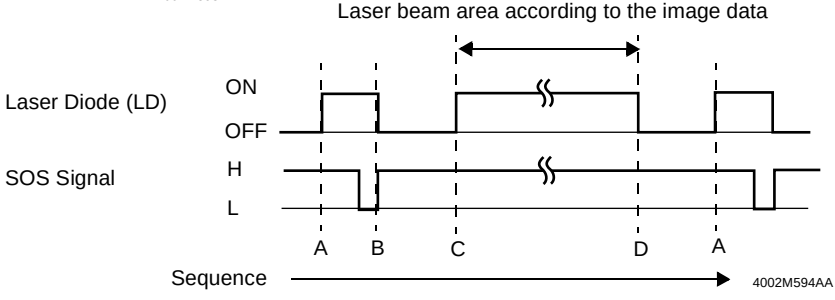

12. DEVELOPING UNIT SECTION

The Developing Unit agitates and triboelectrically charges toner so that it sticks to the electrostatic latent image formed on the surface of the PC Drum, then changing the image to a visible, developed one.

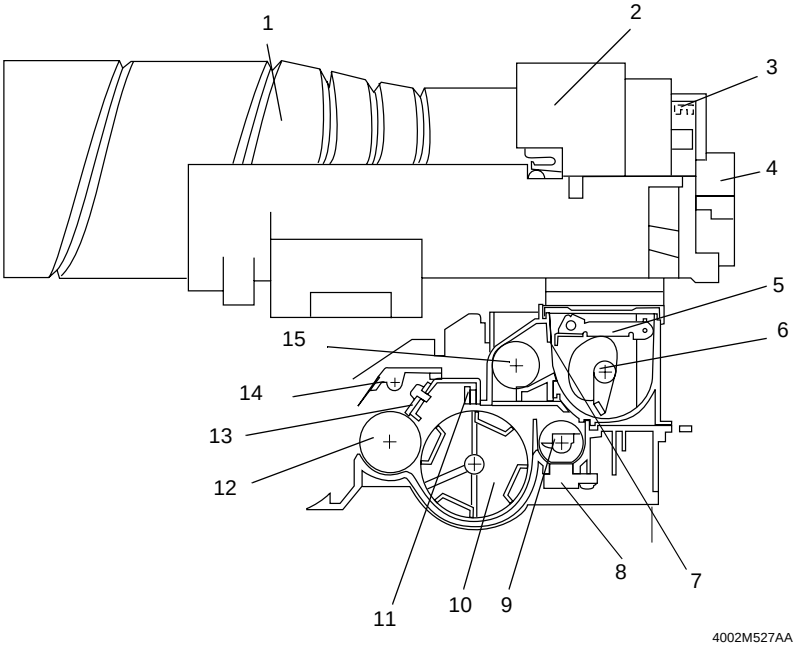

1. Toner Bottle
2. Toner Bottle Holder
3. Toner Bottle Home Position Sensor PC21
4. Main Hopper Toner Replenishing Motor M13
5. Sub Hopper Toner Empty Detecting Lever
6. Sub Hopper Toner Agitating Lever
7. Toner Regulator
8. ATDC Sensor UN2
9. Developer Conveying /Agitating Screw
10. Bucket Roller
11. Magnet Sheet
12. Sleeve/Magnet Roller
13. Doctor Blade
14. Developer Scattering Prevention Plate
15. Sub Hopper Toner Replenishing Roller

12-1. Developing Unit Drive Mechanism

The rollers and screws are driven through a gear train from the motor.

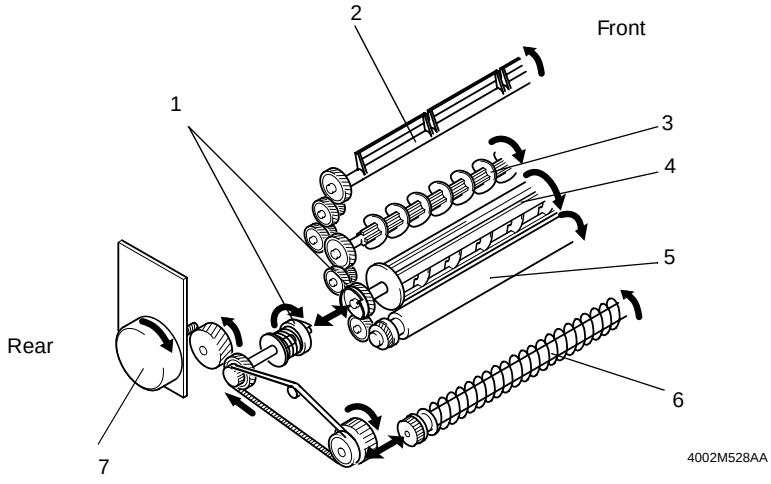

1. Coupling Gear
2. Sub Hopper Toner Agitating Lever
3. Developer Conveying/Agitating Screw
4. Bucket Roller
5. Sleeve/Magnet Roller
6. Toner Conveying Coil
7. Developing Unit Drive Motor M1

	CONTROL SIGNAL	ON	OFF	WIRING DIAGRAM
M1	PWB-A PJ7A-6A	L	H	4 - C

12-2. Sleeve/Magnet Roller

- The Sleeve/Magnet Roller, which consists of an outer sleeve roller and an inner magnet roller, conveys developer to the point of development.
- The magnetic force of the magnet roller at the point of development is the strongest so that the developer brush stands straight up to deliver the greatest amount of toner to the point of development.

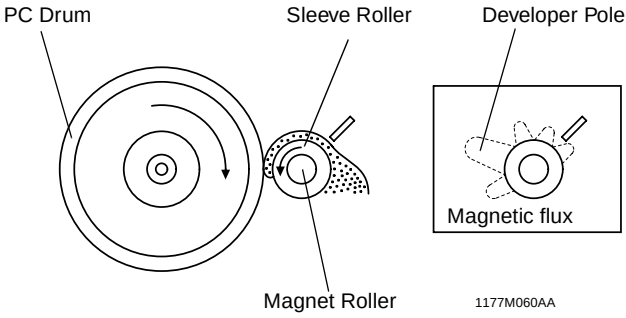

12-3. Doctor Blade

The Doctor Blade controls the height of the developer brush, ensuring that the developer on the Sleeve/Magnet Roller levels out.

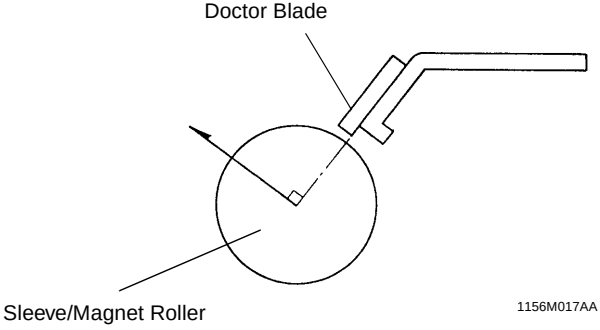

12-4. Developing Bias

- A developing bias voltage (Vb) is applied to the sleeve roller to prevent a foggy background on the copy.
- The amount of toner attracted onto the surface of the PC Drum depends on how much lower the PC Drum surface potential (Vi) is than Vb (i.e., potential difference).

✻ When the potential difference is large, a greater amount of toner is attracted.
✻ When the potential difference is small, a smaller amount of toner is attracted.

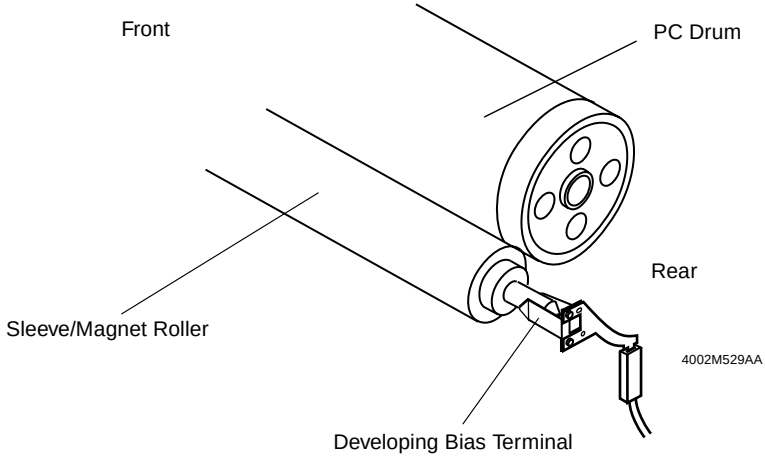

	CONTROL SIGNAL	ON	OFF	WIRING DIAGRAM
Developing Bias	PWB-A PJ12A-8B	L	H	4 - G

12-5. ATDC Sensor

The ATDC Sensor detects the toner-to-carrier ratio (T/C) of the developer in the Developer Mixing Chamber.

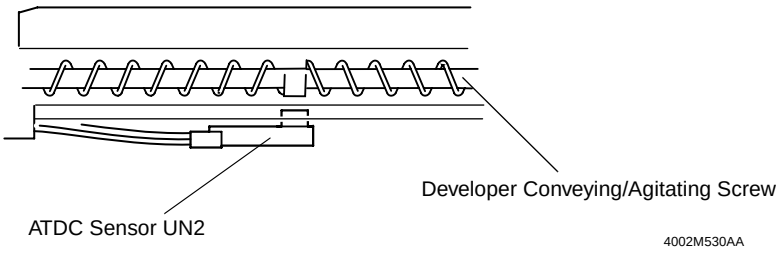

	CONTROL SIGNAL	REFERENCE T/C RATO	STANDARD OUTPUT VOLTAGE	WIRING DIAGRAM
UN2	PWB-A PJ7A-10B	5.0 %	2.27 V	4 - E

(1) ATDC Sensor Automatic Adjustment

The reference value for the ATDC Sensor is automatically adjusted as detailed below using the ATDC Sensor Automatic Adjustment mode.

With the copier set in the ATDC Sensor Automatic Adjustment mode, press the Start key.

↓

The developer is mixed.

↓

The ATDC Sensor converts the reference T/C (5.0 %) to a corresponding voltage value and outputs it.

↓

Is the output voltage 2.27 V?

YES ↓

The voltage input to the ATDC Sensor from the Master Board at this time is fixed as the reference voltage.

NO ↓

The voltage input to the ATDC Sensor from the Master Board is varied.
2.27 V or more: Decrease the voltage.
Less than 2.27 V: Increase the voltage.

↑ (return to "The ATDC Sensor converts the reference T/C (5.0 %) to a corresponding voltage value and outputs it.")

N O T E

- *If the automatic adjustment mode is run at a time when the starter has not been changed, it can result in a wrong T/C reference value being set by the copier. Avoid casual use of this mode.*
- *If the setting value has been cleared as a result of the Memory Board being replaced, return the value of "ATDC Control" under the Adjust mode back to the original one before the board was replaced.*

12-6. Toner Replenishing Control

Toner Replenishing Control by ATDC Sensor
The ATDC Sensor samples T/C for each scan motion and the copier compares the reading with the reference T/C to determine the appropriate amount of toner to be replenished.

Toner Replenishing	Conditions	Amount Replenished
Large amount	The sensor reading is lower than the reference T/C ratio [4.5 %] by 0.5 % or more.	Approx. 216 mg
Small amount	The sensor reading is lower than the reference T/C ratio [4.5 %] by less than 0.5 %	Approx. 101 mg
Fixed amount	The sensor reading is higher than the reference T/C ratio [4.5 %] by less than 0.5 %	Approx. 22 mg
None	The sensor reading is higher than the reference T/C ratio [4.5 %] by 0.5 % or more.	Approx. 0 mg

✻ The amount of toner replenished varies according to the paper size (given in the table are figures for A4).

12-7. Toner Supply Hole Covering/Uncovering Mechanism

The Toner Supply Hole is covered to prevent toner from dropping into the inside of the copier when the PC Unit is slid out of the copier.

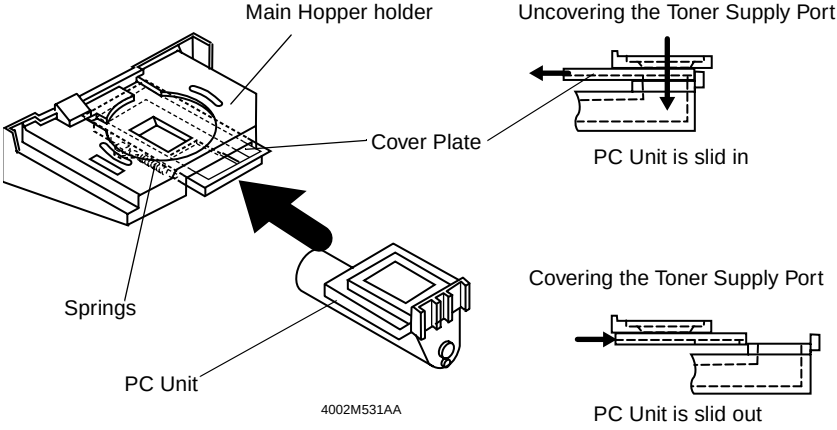

12-8. Toner Bottle Home Position Detection Mechanism

The Toner Bottle is detected at its home position by a home position detection sensor. When the Toner Bottle is at the home position (stationary), its toner supply port should face up.

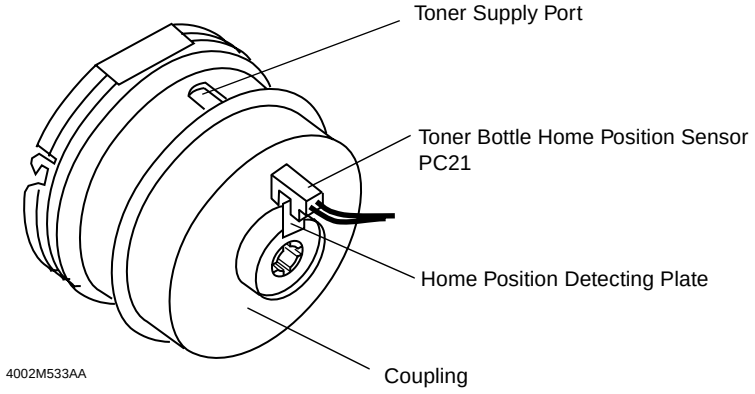

	CONTROL SIGNAL	Blocked	Unblocked	WIRING DIAGRAM
PC21	PWB-A PJ11A-5	H	L	4 - B

12-9. Toner Bottle Vibration Mechanism

When the dents in the Toner Bottle move past the collars in the Bottle Holder, the Toner Bottle is vibrated to prevent some of the toner from remaining unconsumed in the bottle.

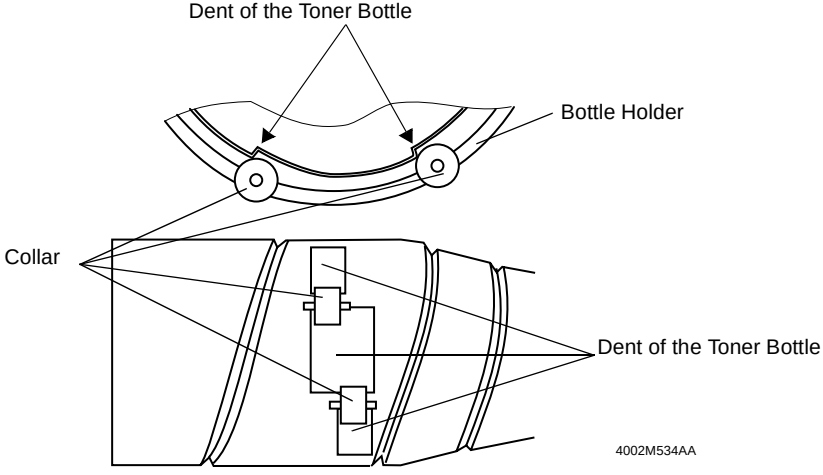

12-10. Main Hopper Toner Replenishing Mechanism

- The Main Hopper Toner Replenishing Motor supplies toner from the Toner Bottle to Sub Hopper.
- Toner is replenished each time the toner-empty detection switch of the Sub Hopper is turned ON and OFF.

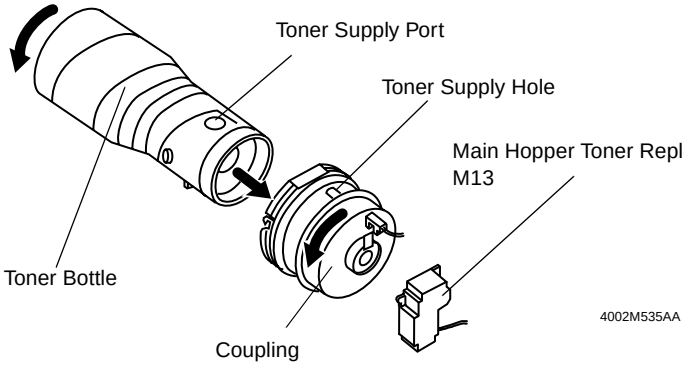

	CONTROL SIGNAL	ON	OFF	WIRING DIAGRAM
M13	PWB-A PJ11A-1	H	L	4 - B

12-11. Main Hopper Locking Mechanism

The coupling is provided with a locking mechanism that prevents the coupling from deviating from the correct position when the Toner Bottle is removed or reinstalled.

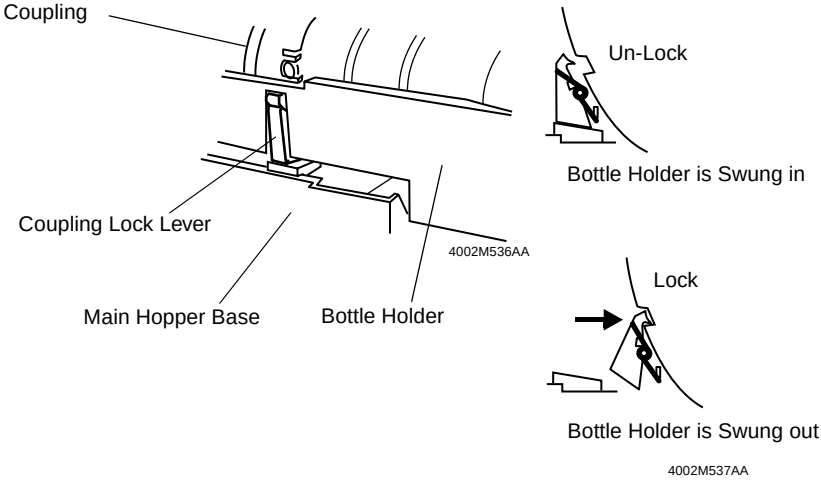

12-12. Sub Hopper Toner Replenishing Mechanism

- The Sub Hopper Toner Replenishing Motor replenishes toner from the Sub Hopper to the Developer Mixing Chamber.
- The toner replenishing time is calculated based on the T/C reading and paper size.

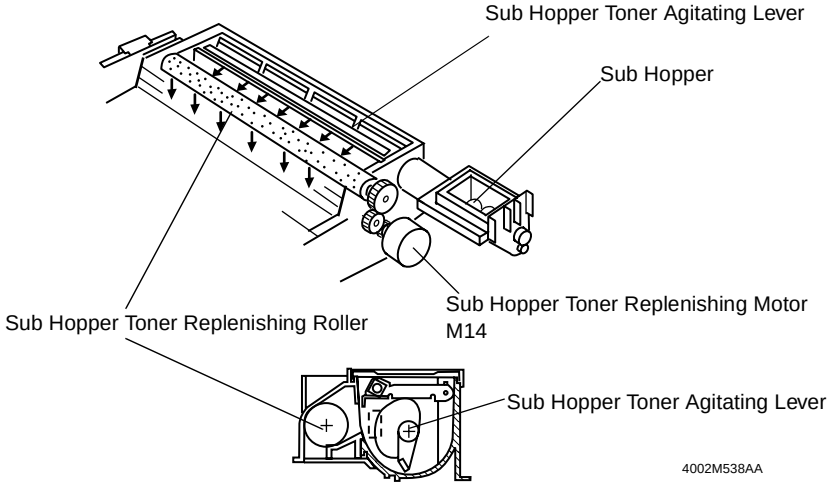

	CONTROL SIGNAL	ON	OFF	WIRING DIAGRAM
M14	PWB-A PJ7A-2B	L	H	4 - C

12-13. Sub Hopper Toner Empty Detecting Mechanism

- A magnet and a toner-empty detecting switch detect a toner-empty condition in the Sub Hopper.
- As toner in the Sub Hopper is consumed, the magnet turns ON the Sub Hopper Toner Empty Switch. This causes the copier to start a toner replenishing sequence. If the Sub Hopper Toner Empty Switch remains ON for 2 sec. or more even when the Toner Bottle has been turned for 60 sec., the copier determines that it is a toner-near-empty condition.
- A toner-empty condition is detected when T/C becomes less than 3% in a toner-near-empty condition.

	Detecting Conditions
Toner Near Empty Detected	The Sub Hopper Toner Empty Switch remains ON for 60 second after a toner replenishing sequence has been started.
Toner Empty Detected	T/C becomes less than 3% in a toner-near-empty condition.

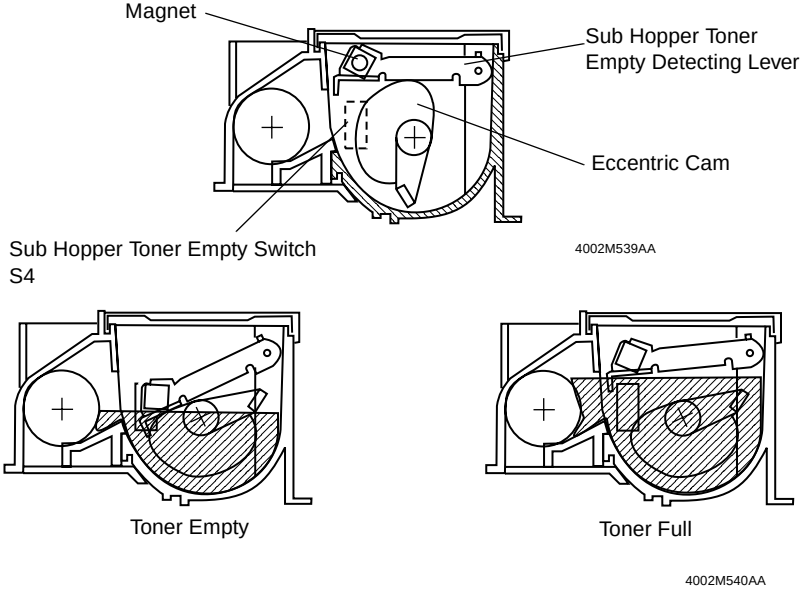

	CONTROL SIGNAL	ON	OFF	WIRING DIAGRAM
S4	PWB-A PJ7A-12B	L	H	4 - E

13. PAPER TAKE UP/FEED SECTION

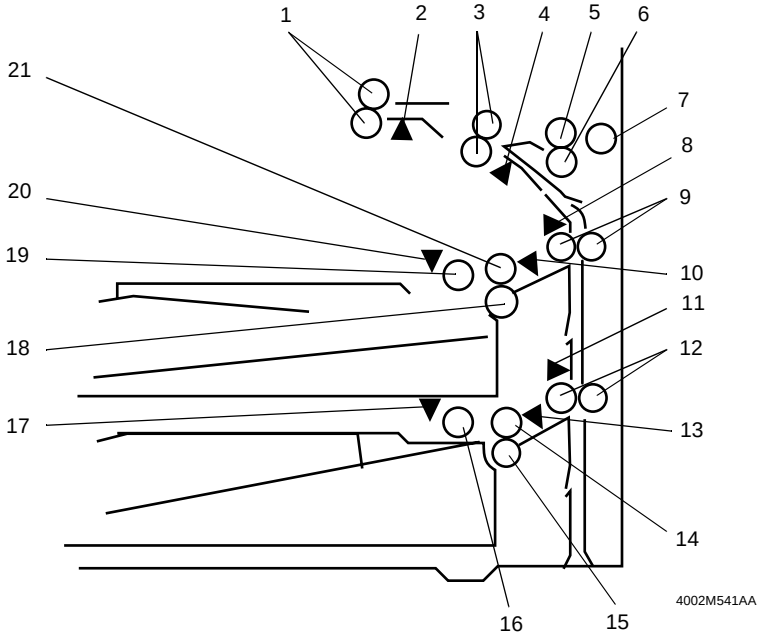

1. Synchronizing Roller
2. Synchronizing Roller Sensor PC1
3. Transport Rollers
4. Transport Roller Sensor PC2
5. Manual Bypass Feed Roll
6. Manual Bypass Separator Roll
7. Manual Bypass Take-Up Roll
8. Paper Leading Edge Sensor SW1 PC5
9. Upper Vertical Transport Roller
10. 1st Drawer Paper Take-Up Sensor PC3
11. Paper Leading Edge Sensor SW2 PC6
12. Lower Vertical Transport Roller
13. 2nd Drawer Paper Take-Up Sensor PC4
14. 2nd Drawer Feed Roll
15. 2nd Drawer Separator Roll
16. 2nd Drawer Paper Take-Up Roll
17. 2nd Drawer Paper Empty Sensor PC17 (at front of copier)
    2nd Drawer Lift-Up Sensor PC15 (in rear of copier)
18. 1st Drawer Separator Roll
19. 1st Drawer Paper Take-Up Roll
20. 1st Drawer Paper Empty Sensor PC16 (at front of copier)
    1st Drawer Lift-Up Sensor PC14 (in rear of copier)
21. 1st Drawer Feed Roll

13-1. Drawer In Position Detection

When the drawer is slid into the copier, the light blocking plate blocks the Set Sensor. The copier then knows that the drawer has been slid in position.

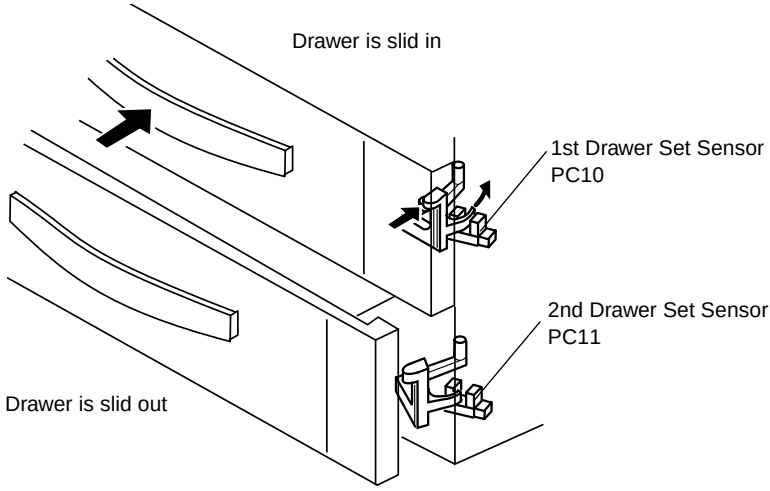

	CONTROL SIGNAL	Blocked	Unblocked	WIRING DIAGRAM
PC10 (1st Drawer)	PWB-A PJ3A-9A	H	L	27 - D
PC11 (2nd Drawer)	PWB-A PJ3A-9B	H	L	27 - D

13-2. Paper Empty Detection Mechanism

The Paper Empty Sensor detects a paper-empty condition in the drawer.

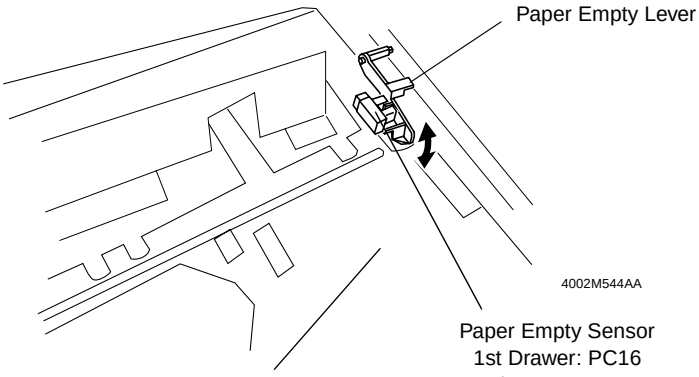



Paper Present
PC16, 17 Blocked

Paper not Present
PC16, 17 Unblocked

4002M543AA

	CONTROL SIGNAL	Blocked	Unblocked	WIRING DIAGRAM
PC16 (1st Drawer)	PWB-A PJ4A-9B	H	L	27 - F
PC17 (2nd Drawer)	PWB-A PJ4A-15B	H	L	27 - F

13-3. Drawer Paper Lifting/Lowering Mechanism

The paper lifting mechanism employs the Lift-Up Motor that causes the paper stack loaded in the drawer to be pressed up against the Paper Take-Up Roll with a given pressure, thereby ensuring positive paper take-up.

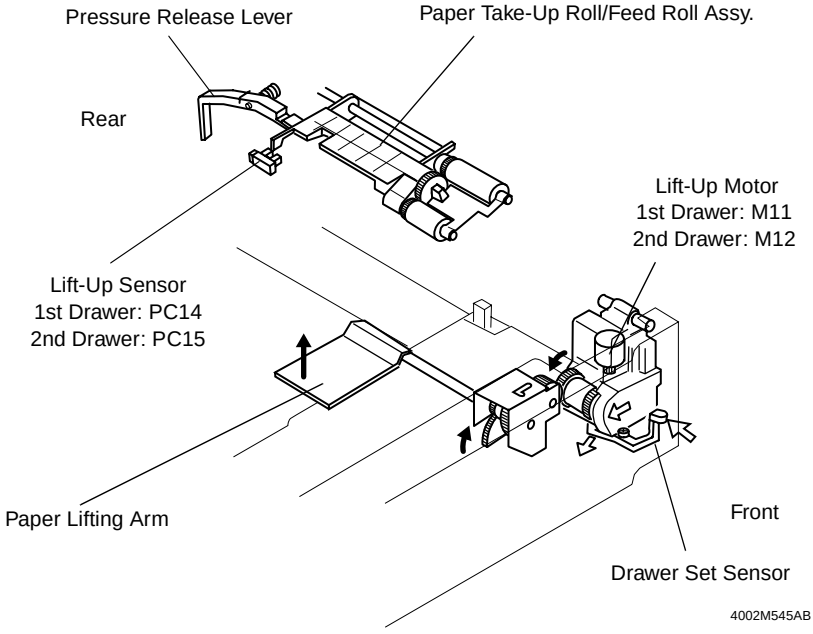

When the drawer is slid in

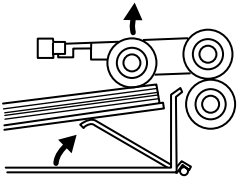

The Lift-Up Motor is energized.
↓
The Paper Lifting Arm goes up.
↓
The Lift-Up Sensor is blocked.
↓
The Lift-Up Motor is deenergized.

During a copy cycle

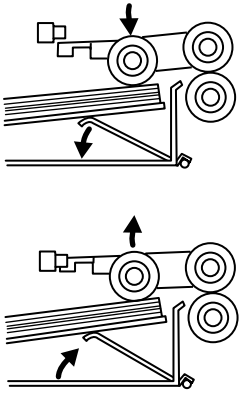

4002M547AA

Paper is consumed.
↓
The Paper Take-Up Roll lowers.
↓
The Lift-Up Sensor is unblocked.
↓
The Lift-Up Motor is energized.
↓
The Paper Lifting Arm goes up.
↓
The Lift-Up Sensor is blocked.
↓
The Lift-Up Motor is deenergized.

	CONTROL SIGNAL	Blocked	Unblocked	WIRING DIAGRAM
PC14 (1st Drawer)	PWB-A PJ4A-6B	H	L	27 - E
PC15 (2nd Drawer)	PWB-A PJ4A-12B	H	L	27 - F

	CONTROL SIGNAL	ON	OFF	WIRING DIAGRAM
M11 (1st Drawer)	PWB-A PJ3A-13A	H	L	27 - B
M12 (2nd Drawer)	PWB-A PJ3A-13B	H	L	27 - C

13-4. Paper Level Detection Mechanism

The amount of paper still available for use, or the paper level, of the drawer is detected by the Lift-Up Motor Pulse Sensor and a pulse disk. They function to detect the speed of the Lift-Up Motor.

When the drawer is slid in

The Lift-Up Motor is energized.

↓

The number of pulses generated is counted for the period of time until the Lift-Up Sensor is blocked.

↓

The number of pulses is translated to the amount of paper which is indicated on the control panel.

During a copy cycle

Paper is consumed.

↓

The Lift-Up Motor is energized.

↓

The number of pulses generated is counted for the period of time until the Lift-Up Sensor is blocked.

↓

The number of pulses is cumulatively counted and the total count is translated to the amount of paper.

↓

The unit segment of the paper level indicator on the control panel goes out.

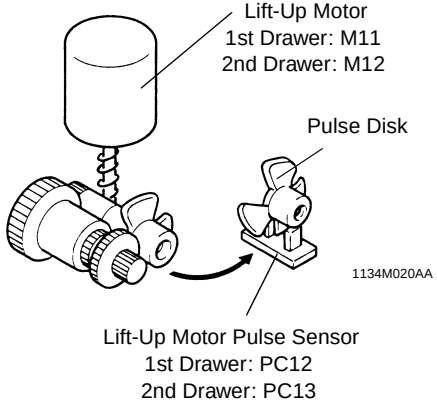

✻ Paper level Indicator

- 1 to 50 sheets



1134M058AA

- 50 to 200 sheets



1134M059AA

- 200 to 350 sheets



1134M060AA

- 350 to 500 sheets



1134M061AA

- 500 sheets up



1134M062AA

	CONTROL SIGNAL	Blocked	Unblocked	WIRING DIAGRAM
PC12 (1st Drawer)	PWB-A PJ3A-11A	H	L	27 - E
PC13 (2nd Drawer)	PWB-A PJ3A-11B	H	L	27 - E

13-5. Universal Tray Paper Size Detection Mechanism

- Both the width (in the crosswise direction) and length (in the feeding direction) of the paper are detected and the copier CPU determines the paper size based on the combination of the two readings.

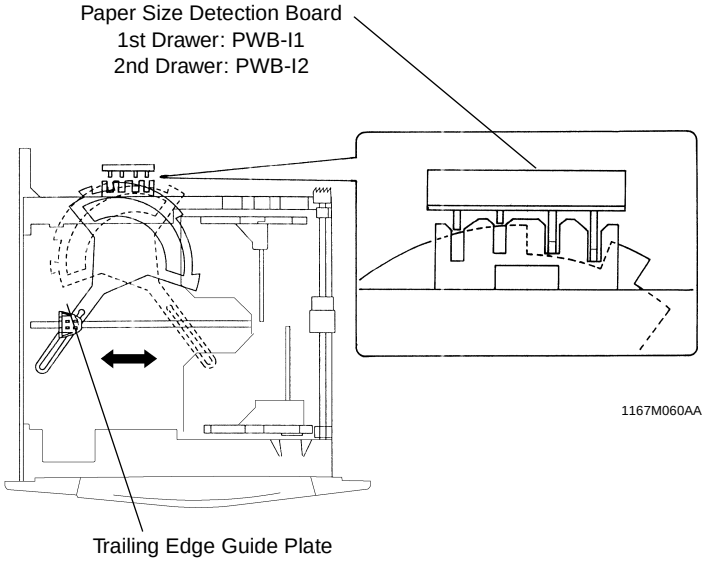

✻ Details of paper Size Detecting Switches/Sensors Operation and Detectable Paper Sizes
1st/2nd Drawer L/H: Either L or H is detected.

Paper Size Name	Inch Equivalent	Width × Length (mm)	Paper Size Detecting Switches					
			FD (PWB-I1, I2)				CD	
			FD1	FD2	FD3	FD4	PC23, 25	PC24, 26
A5L *1		148 × 210	L/H	H	H	H	L	L
B5L		182 × 257	H	H	L	H	L	L
B5C		257 × 182	L	L	H	H	H	L
A4L		210 × 297	H	L/H	L	L	L	H
A4C		297 × 210	L/H	H	H	H	H	L
B4L		257 × 364	L	L	L	H	H	L
A3L		297 × 420	L	L/H	L	L	H	L
Invoice L *2	5-1/2 × 8-1/2	140 × 216	L/H	H	H	H	L	L
LETTER L	8.5 × 11	216 × 279	L	H	H	L	L	H
LETTER C	11 × 8.5	279 × 216	H	H	H	H	H	H
11 × 14	11 × 14	279 × 356	L	L	L	H	H	H
11 × 17	11 × 17	279 × 432	L	H	L	L	H	H
LEAGAL L *3	8.5 × 14	216 × 356	L	L	L	H	L	H
G LETTER L *2	8 × 10.5	203 × 267	H	L	H	H	L	H

Paper Size Name	Inch Equivalent	Width × Length (mm)	Paper Size Detecting Switches					
			FD (PWB-I1, I2)				CD	
			FD1	FD2	FD3	FD4	PC23, 25	PC24, 26
G LETTER C	10.5 × 8	267 × 203	L	H	H	H	H	H
QUART L	10 × 8	254 × 203	H	H	L	H	L	H
Korea FLS *1		192 × 268	H	L	H	H	L	L/H
EXE L *2	7.25 × 10.5	184 × 267	H	L	H	H	L	L
EXE C	10.5 × 7.25	267 × 184	L	L	H	H	H	H
FLS *3	8 × 13	203 × 330	L	L	L	L	L	H
FOLIO *3		210 × 330	L	L	L	L	L	H
FOLIO *3		210 × 356	L	L	L	L	L	H
G LEAGAL L *3	8.5 × 13	216 × 330	L	L	L	L	L	H

Switch Operation L: OFF, H: ON
Sensor Operation L: Blocked, H: Unblocked
*1: Metric areas
*2: Inch areas
*3: “Tech. Rep. Mode > System Input > Paper size Input” must be set for the paper size.

• 1st Drawer

	CONTROL SIGNAL	ON	OFF	WIRING DIAGRAM
PWB-I1 FD1	PWB-A PJ4A-1A	H	L	27 - H
PWB-I1 FD2	PWB-A PJ4A-2A	H	L	27 - H
PWB-I1 FD3	PWB-A PJ4A-3A	H	L	27 - H
PWB-I1 FD4	PWB-A PJ4A-4A	H	L	27 - H

	CONTROL SIGNAL	Blocked	Unblocked	WIRING DIAGRAM
PC23	PWB-A PJ12A-3A	H	L	27 - G
PC25	PWB-A PJ12A-9A	H	L	27 - G

• 2nd Drawer

	CONTROL SIGNAL	ON	OFF	WIRING DIAGRAM
PWB-I2 FD1	PWB-A PJ4A-5A	H	L	27 - I
PWB-I2 FD2	PWB-A PJ4A-6A	H	L	27 - I
PWB-I2 FD3	PWB-A PJ4A-7A	H	L	27 - I
PWB-I2 FD4	PWB-A PJ4A-8A	H	L	27 - I

	CONTROL SIGNAL	Blocked	Unblocked	WIRING DIAGRAM
PC24	PWB-A PJ12A-6A	H	L	27 - G
PC26	PWB-A PJ12A-12A	H	L	27 - G

13-6. Paper Take Up Mechanism

Drive for the paper take-up sequence comes from a motor.

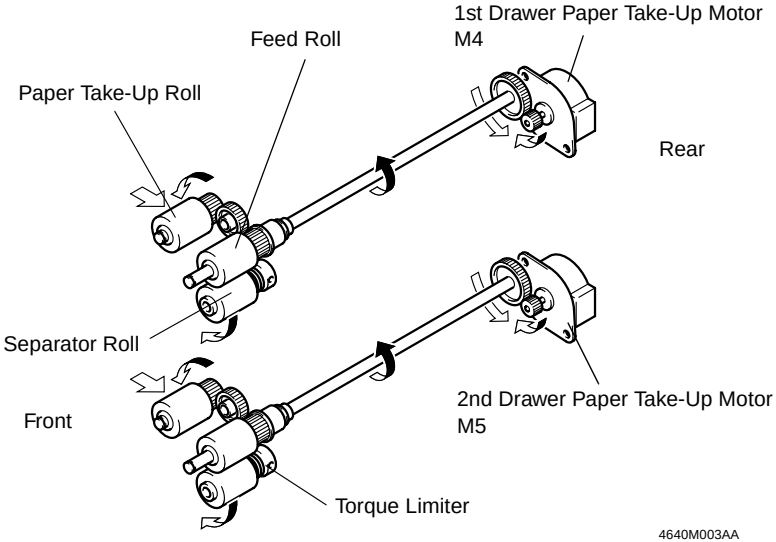

(1) Paper Separating Mechanism

The difference in friction coefficient between the Feed Roll and Separator Roll is used to stop the rotation of the Separator Roll for the prevention of double feed.

Normal feeding: When only one sheet of paper is taken up, the friction coefficient on the top side of the paper is equal to that on the underside. The Separator Roll is driven by the Feed Roll, which results in the paper being fed on.

Double feeding: Since the friction coefficient between the second sheet of paper and the Separator Roll is greater than that between the first and second sheets of paper, the Separator Roll remains stationary, allowing the Feed Roll to feed only the first sheet of paper.

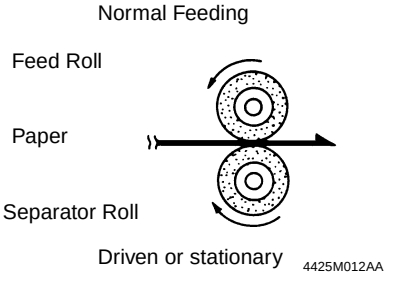

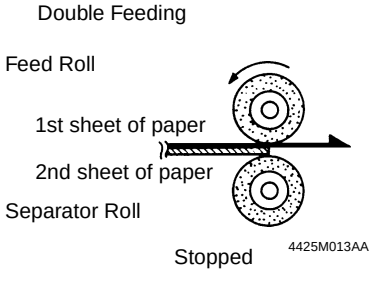

(2) Paper Pressure Release Mechanism

When the drawer is pulled out of the copier, the Pressure Release Rail presses down the Separator Roll Assy, which results in the Separator Roll being disengaged from the Feed Roll.

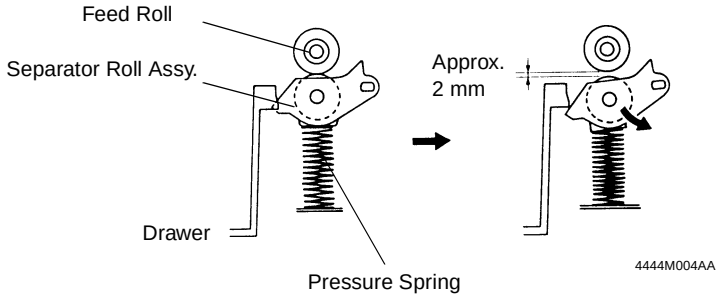

(3) Paper Take Up Roll Retracting Mechanism

When the drawer is pulled out of the copier, the Pressure Release Lever pushes up the Paper Take-Up Roll/Feed Roll Assy, causing the Paper Take-Up Roll to retract from the paper stack.

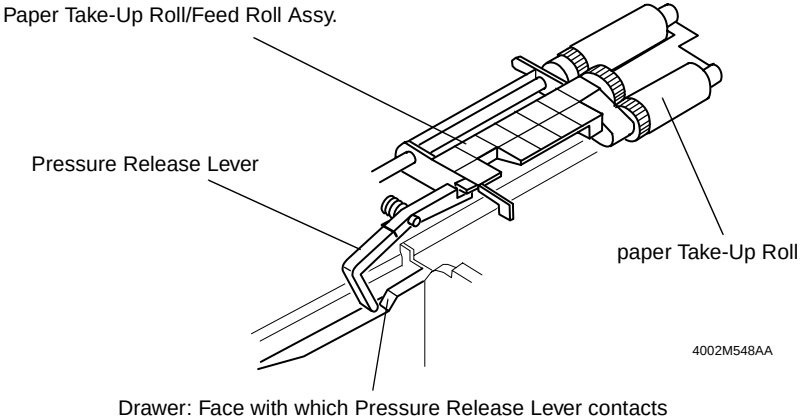

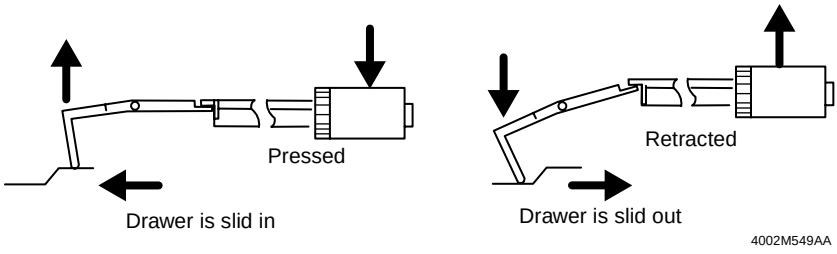

13-7. Paper Take Up Control

(1) Paper Take Up Motor Control

The Paper Take-Up Motor is controlled by the signal output from the Master Board.

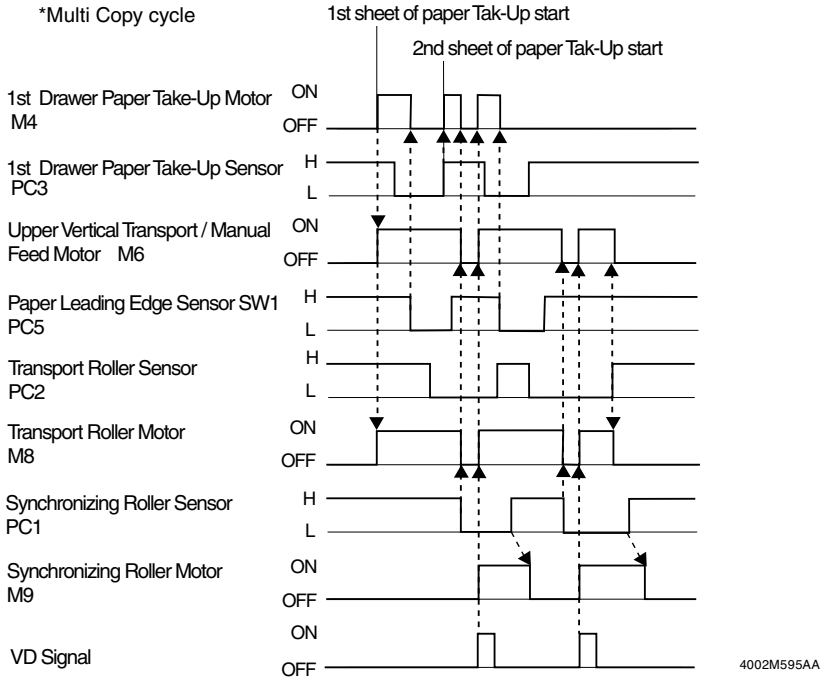

	CONTROL SIGNAL	ON	OFF	WIRING DIAGRAM
M4 (1st Drawer)	PWB-A PJ5A-1A~3A	Pulse Output		27 - B
M5 (2nd Drawer)	PWB-A PJ5A-4A~6A	Pulse Output		27 - B

	CONTROL SIGNAL	Blocked	Unblocked	WIRING DIAGRAM
PC3 (1st Drawer)	PWB-A PJ3A-6A	H	L	27 - C
PC4 (2nd Drawer)	PWB-A PJ3A-6B	H	L	27 - C

(2) Paper Take Up Retry Control

To minimize the occurrence of a paper misfeed, the paper take-up sequence is temporarily halted if the paper fails to reach the Paper Take-Up Detecting Sensor within a given period of time after the sequence has been started. The paper take-up sequence is then performed again. These paper take-up sequences are repeated a given number of times.

	Detecting Sensor	No. of Paper Take-Up Retry Sequences
1st, 2nd Drawer	Paper Take-Up Sensor	2
Manual Feed	Transport Roller Sensor	1

(3) Paper Take Up Interval Control

To minimize the occurrence of a paper misfeed due to improper paper separation, the paper take-up sequence is temporarily halted if the paper fails to reach the Paper Take-Up Detecting Sensor within a given period of time after the sequence has been started. After another given period of time, the paper take-up sequence is performed a second time, thereby ensuring a good interval between two paper take-up sequences.

(4) Double Feed Paper Take Up Control

If double feed has not occurred, the copier starts the paper take-up sequence for the subsequent sheet of paper as soon as the Paper Take-Up Sensor is deactivated.
If double feed occurs, the Paper Take-Up Sensor is not deactivated. In this case, the copier starts the paper take-up sequence for the subsequent sheet of paper when the Paper Leading Edge Sensor is deactivated.

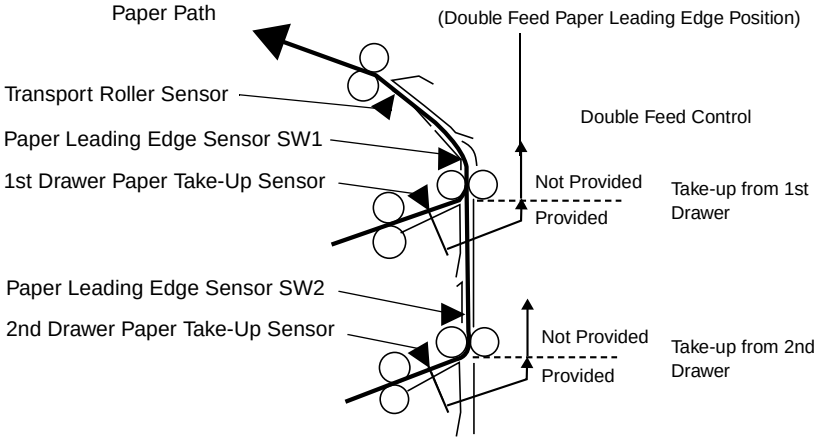

13-8. Vertical Transport Drive Mechanism

A motor drives the Vertical Transport Rollers.

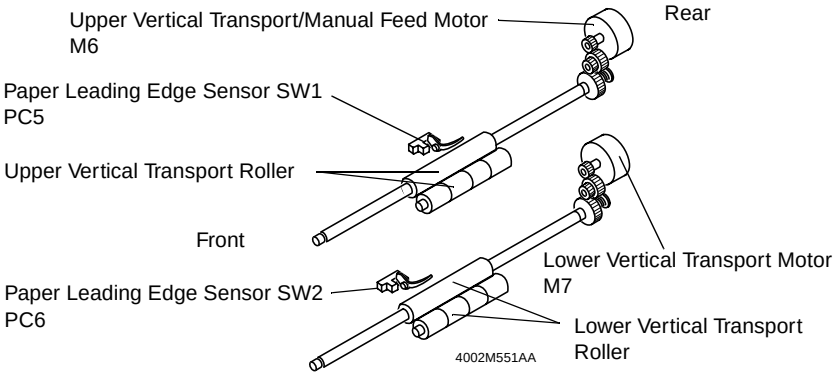

✻ For details of the 1st Drawer control, see 13-7. “Paper Take Up Control”.

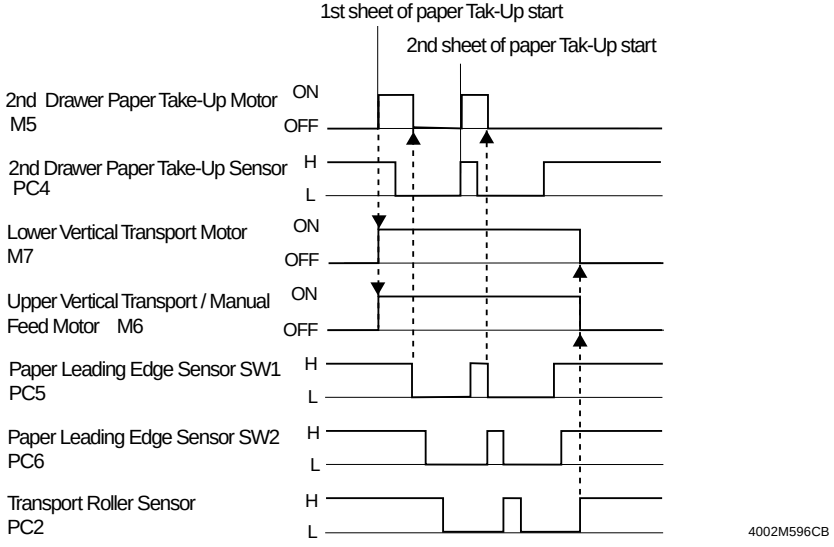

	CONTROL SIGNAL	ON	OFF	WIRING DIAGRAM
M6	PWB-A PJ5A-7A~9A	Pulse Output		7 - C
M7	PWB-A PJ5A-1B~3B	Pulse Output		7 - C

	CONTROL SIGNAL	Blocked	Unblocked	WIRING DIAGRAM
PC5	PWB-A PJ3A-3A	H	L	7 - B
PC6	PWB-A PJ3A-3B	H	L	7 - B

14. MANUAL FEED TABLE SECTION

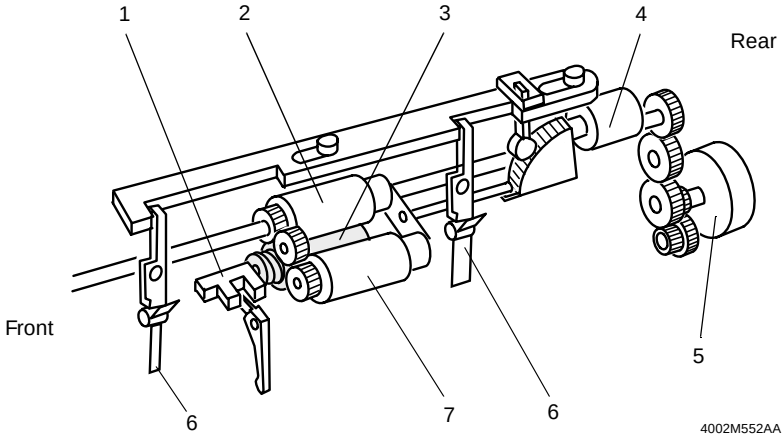

1. Manual Feed Paper Empty Sensor PC18
2. Manual Bypass Feed Roll
3. Manual Bypass Separator Roll
4. Manual Feed Paper Pick-Up Solenoid SL5
5. Upper Vertical Transport/Manual Feed Motor M6
6. Paper Stopper
7. Manual Bypass Take-Up Roll

14-1. Manual Take Up Roll Pressure Mechanism

The Multi/Manual Bypass Take-Up Roll is raised and lowered by energizing and deenergizing the solenoid.

	Solenoid	Take-Up Roll Position	Paper Stoppers
At take-up	Deenergized	Down	Free
At timings other than take-up	Energized	Up	Locked

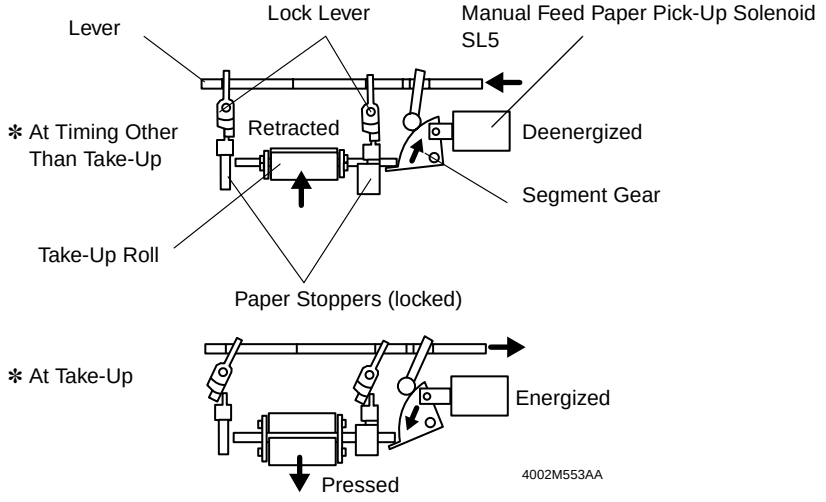

14-2. Manual Feed Paper Separating Mechanism

The difference in friction coefficient between the Feed Roll and Separator Roll is used to stop the rotation of the Separator Roll for the prevention of double feed.

✻ For details of the Paper Separating Mechanism, see 13-6. (1) “Paper Separating Mechanism”.

14-3. Manual Feed Paper Empty Detection Mechanism

The Multi/Manual Bypass Paper Empty Sensor detects a sheet of paper on the Multi/Manual Bypass Table.

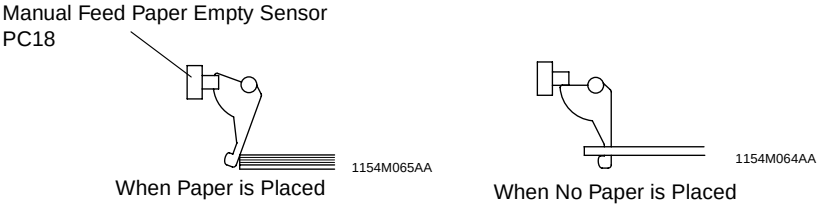

	CONTROL SIGNAL	Blocked	Unblocked	WIRING DIAGRAM
PC18	PWB-A PJ2A-3	L	H	24 - I

14-4. Manual Feed Take Up Control

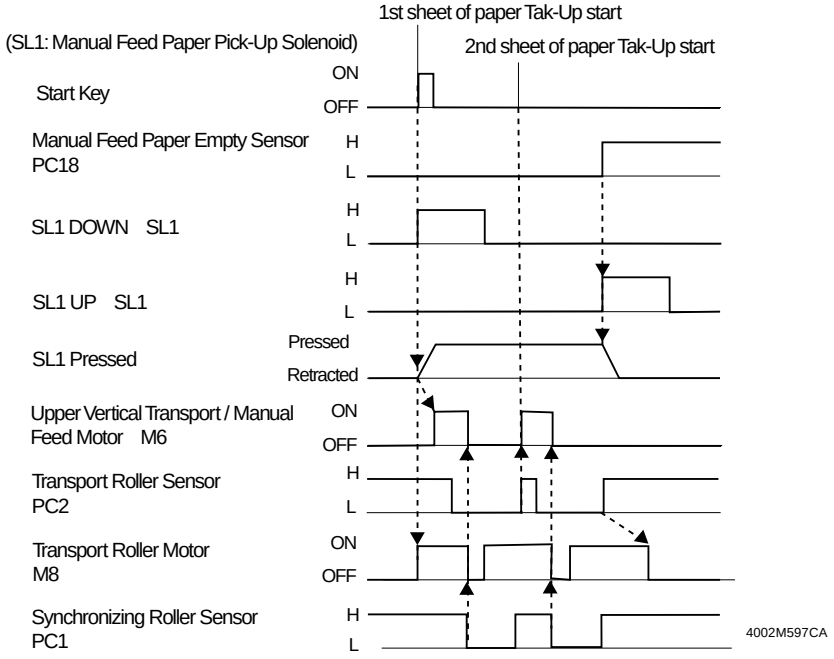

	CONTROL SIGNAL	ON	OFF	WIRING DIAGRAM
M6	PWB-A PJ5A-7A~9A	Pulse Output		7 - C
SL5 Down	PWB-A PJ2A-5	L	H	24 - I
SL5 UP	PWB-A PJ2A-6	L	H	24 - I

15. TRANSPORT/SYNCHRONIZING ROLLERS SECTION

The Synchronizing Rollers are turned in time with the optical section (Scanner) and transport section (paper).

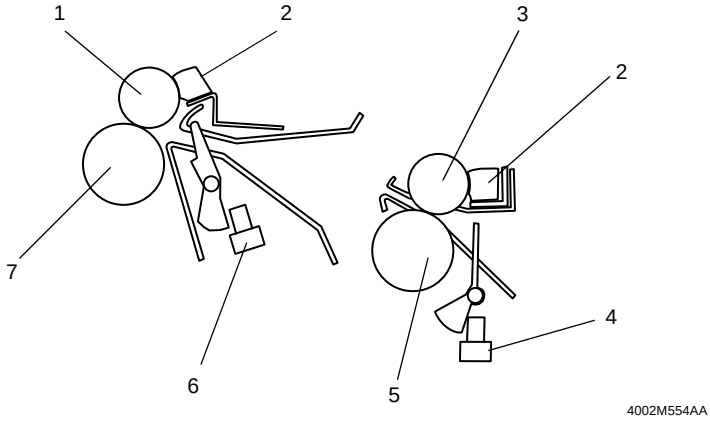

1. Upper Synchronizing Roller
2. Paper Dust Remover
3. Upper Transport Roller
4. Transport Roller Sensor PC2
5. Lower Transport Roller
6. Paper Leading Edge Sensor PC1
7. Lower Synchronizing Roller

15-1. Paper Dust Remover

Triboelectric charges generated on the roller attract paper dust from the paper and the dust is then transferred onto the Paper Dust Remover.

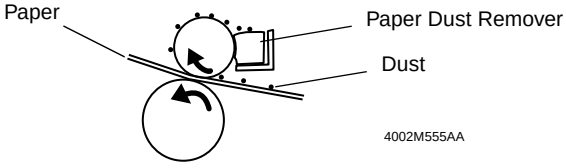

15-2. Transport Roller Drive Mechanism

The Transport Roller is driven by a motor.

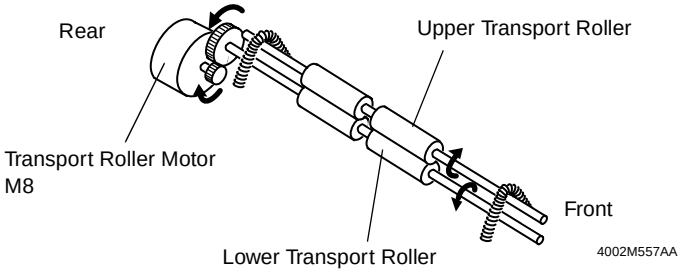

	CONTROL SIGNAL	ON	OFF	WIRING DIAGRAM
M8	PWB-A PJ5A-4B~6B	Pulse Output		7 - C

15-3. Synchronizing Roller Drive Mechanism

The Synchronizing Roller is driven by a motor.

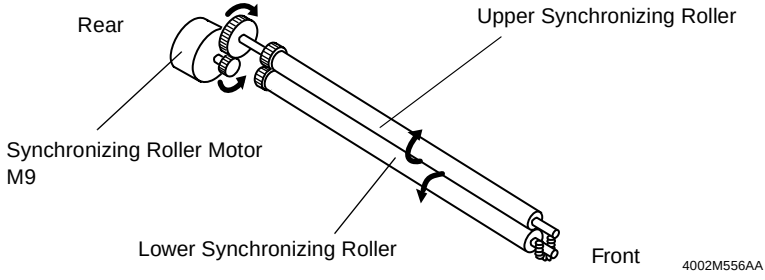

	CONTROL SIGNAL	ON	OFF	WIRING DIAGRAM
M9	PWB-A PJ5A-7B~9B	Pulse Output		7 - D

16. IMAGE TRANSFER AND PAPER SEPARATION SECTION

- The DC corona emission applied by the Image Transfer Corona attracts the toner image formed on the surface of the PC Drum onto the surface of the paper, forming a visible, developed image of the original.
- The AC corona emission applied by the Paper Separator Corona weakens electrostatic attraction between the paper and PC Drum.
- The PC Drum Paper Separator Fingers physically peel paper off the surface of the PC Drum.

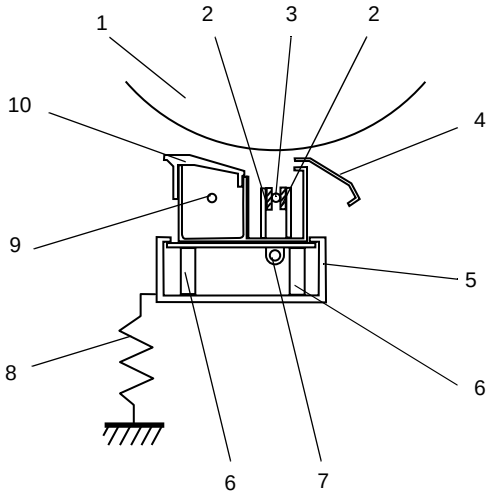

4002M558AA

1. PC Drum
2. Image Transfer Corona Wire Cleaner
3. Image Transfer Corona Wire
4. Pre-Image Transfer Guide Plate
5. Image Transfer/Paper Separator Coronas Unit Rail
6. Image Transfer/Paper Separator Coronas Unit Spring
7. Image Transfer Corona Wire Cleaner Lever
8. Resistor
9. Paper Separator Corona Wire
10. Guide

	CONTROL SIGNAL	ON	OFF	WIRING DIAGRAM
Image Transfer	PWB-A PJ12A-7B	L	H	5 - F
Paper Separator	PWB-A PJ12A-6A	L	H	5 - F

16-1. PC Drum Paper Separator Fingers Section

(1) Finger Pressing Detection Mechanism

- The PC Drum Paper Separator Fingers are pressed against the surface of the PC Drum to properly separate paper from the surface of the PC Drum.
- This motion is done by the Separator Finger Solenoid.

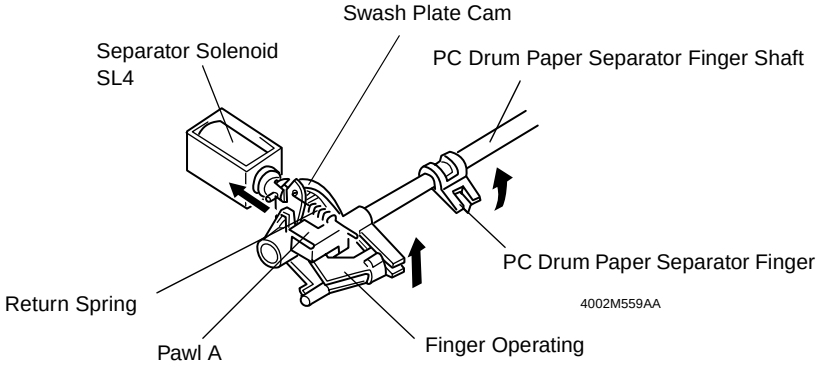

	CONTROL SIGNAL	ON	OFF	WIRING DIAGRAM
SL4	PWB-A PJ7A-4B	L	H	4 - D

(2) Finger Back and Forth Detection Mechanism

The PC Drum Paper Separator Fingers are moved in the crosswise direction to reduce damage to the PC Drum.

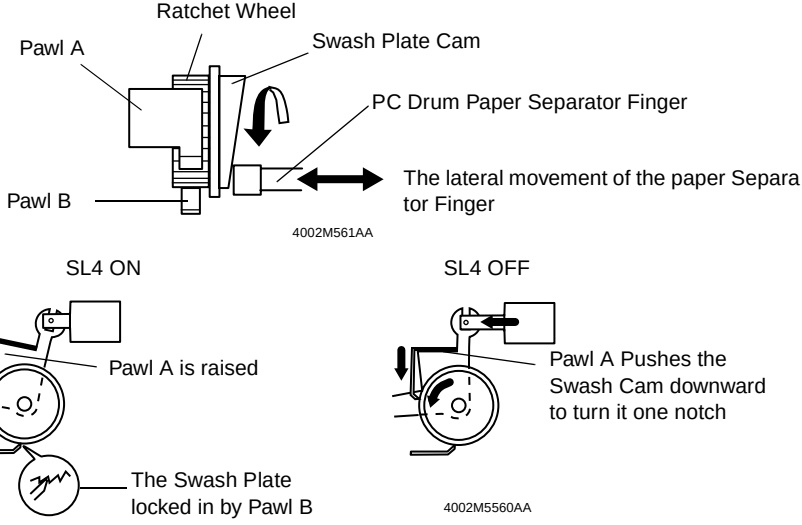

17. PC DRUM CLEANING SECTION

- The Cleaning Blade scrapes off any toner remaining on the surface of the PC Drum.
- The PC Drum Paper Separator Fingers physically separate paper from the surface of the PC Drum.

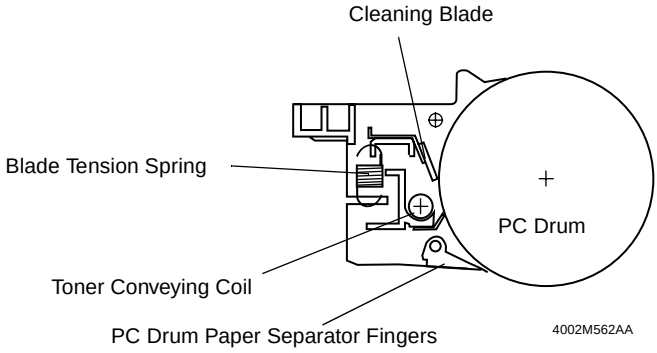

17-1. Cleaning Blade Moving Mechanism

- The Cleaning Blade is moved back and forth while the PC Drum is turning to ensure that all residual toner is scraped cleanly off the surface of the PC Drum, thereby preventing the PC Drum as well as Cleaning Blade from deteriorating.
- Drive from a motor turns the Lateral Movement Cam, which results in the Cleaning Blade being moved back and forth.

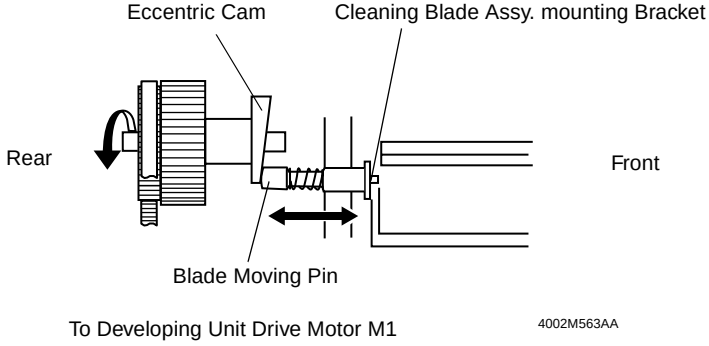

17-2. Toner Conveying/Collecting Mechanism

- The toner, which has been scraped off the surface of the PC Drum by the Cleaning Blade, is conveyed by the Toner Conveying Coil and dropped into the Toner Collecting Bottle.
- The Toner Conveying Coil is driven by a motor.

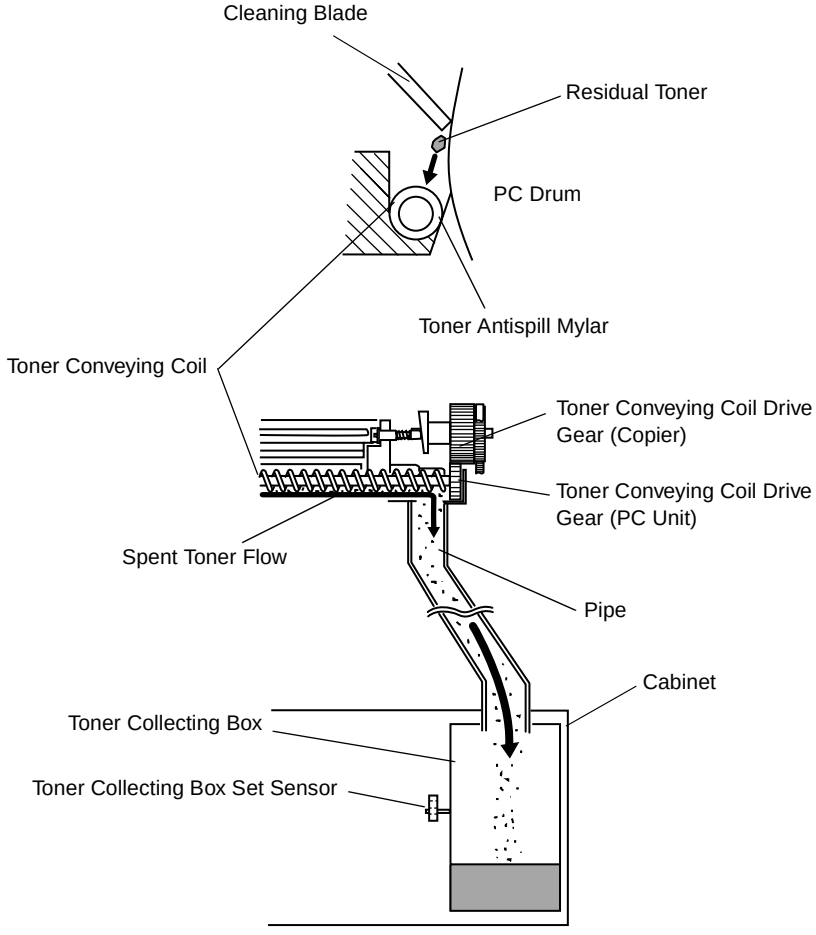

18. MAIN ERASE SECTION

The light from the Main Erase Lamp neutralizes any surface potential remaining on the surface of the PC Drum after cleaning.

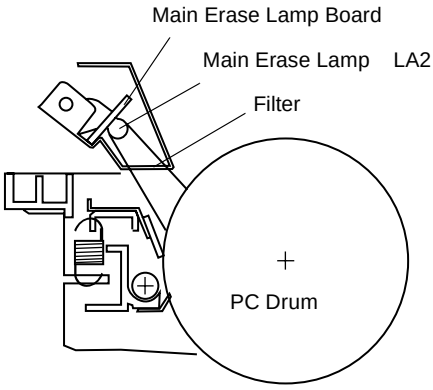

	CONTROL SIGNAL	ON	OFF	WIRING DIAGRAM
LA2	PWB-A PJ9A-7A	L	H	4 - E

19. TRANSPORT SECTION

- Rotation of the Suction Fan Motor results in the paper separated from the PC Drum being drawn onto the turning Suction Belts.
- The Suction Belts are driven by a motor.

Speed Control	Plugged In*	Wait	Copy	JAM	Trouble	Front Door open	pre-Heat
M17	stop	Half	Full	stop	stop	stop	Half

* Plugged in: Where Sleep or Auto Shut OFF is activated

Suction Roller Drive Mechanism

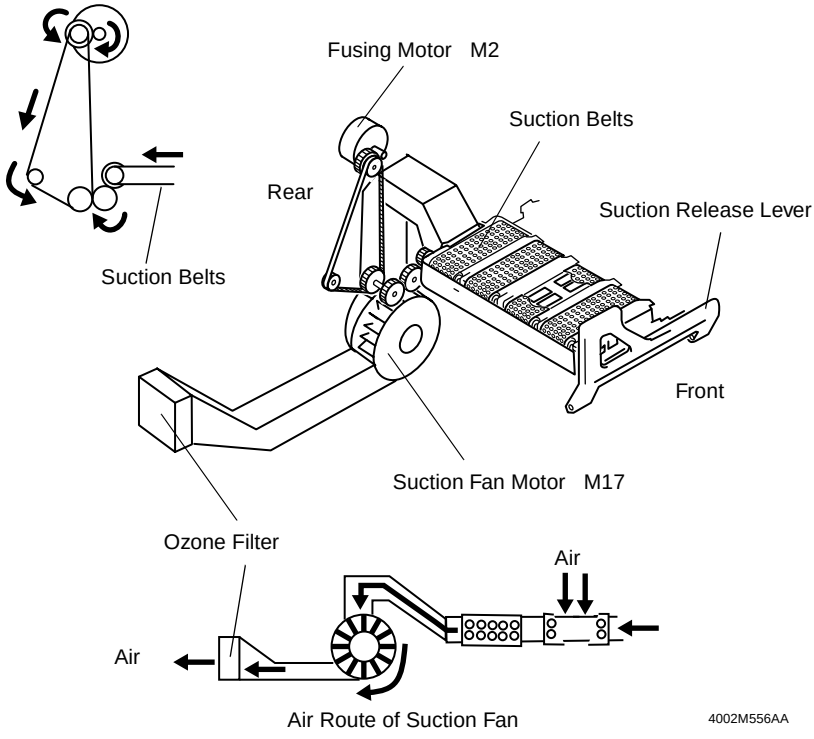

Air Route of Suction Fan

4002M556AA

	CONTROL SIGNAL	ON	OFF	WIRING DIAGRAM
M2	PWB-A PJ7A-1A	L	H	1 - C
M17	PWB-A PJ13A-2B	H	L	7 - D

✻ As Suction Fan Motor Turns, ozone produced by the Image Transfer/Paper Separator Coronas is absorbed by the ozone Filter from the air being drawn out of the copier.

20. FUSING UNIT SECTION

The Fusing Unit fixes permanently the developed image to the paper by applying heat and pressure to the toner and paper.

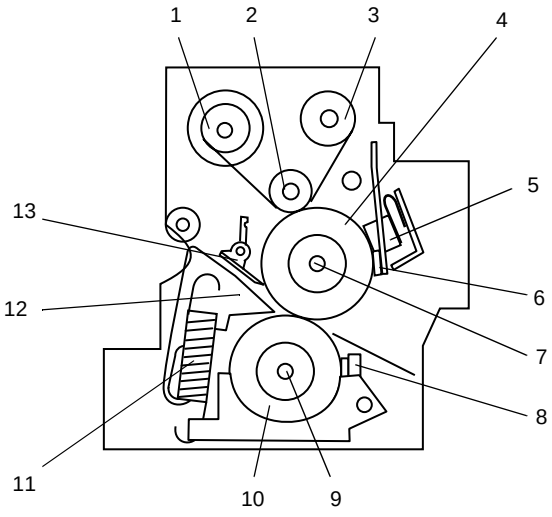

4002M567AA

1. Web Take-Up Roller
2. Oil Supply/Web Feeding Roller
3. Web Roller
4. Upper Fusing Roller
5. Upper Fusing Roller Thermostat TS1
6. Upper Fusing Roller Thermistor TH1
7. Upper Fusing Roller Heater Lamp H1
8. Lower Fusing Roller Thermistor TH2
9. Lower Fusing Roller Heater Lamp H2
10. Lower Fusing Roller
11. Fusing Roller Pressure Spring
12. Lower Paper Separator Fingers
13. Upper Paper Separator Fingers

20-1. Fusing Unit Drive Mechanism

The Fusing Unit is driven by a motor.

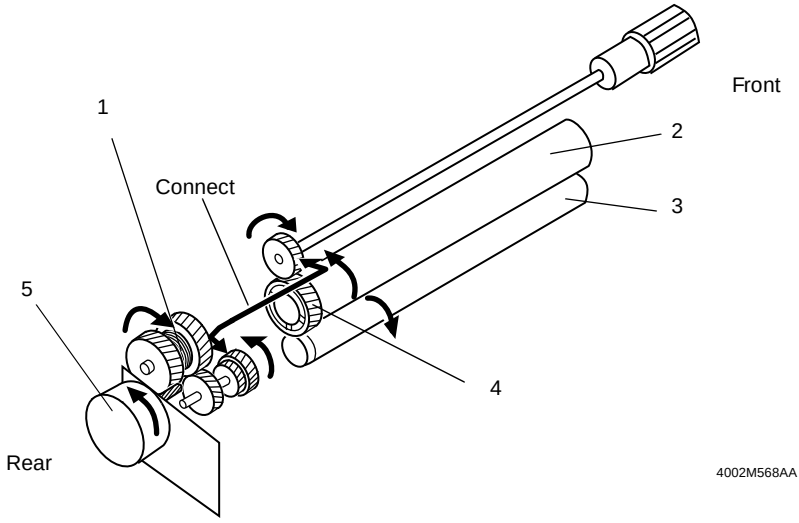

1. Clutch Spring
2. Upper Fusing Roller
3. Lower Fusing Roller
4. Upper Fusing Roller Drive Gear
5. Fusing Motor M2

	CONTROL SIGNAL	ON	OFF	WIRING DIAGRAM
M2	PWB-A PJ7A-1A	L	H	1 - C

20-2. Fusing Rollers Pressure Mechanism

To ensure that there is a certain width of area of contact between the Upper and Lower Fusing Rollers, a pressure spring is used to press the Lower Fusing Roller up against the Upper Fusing Roller.

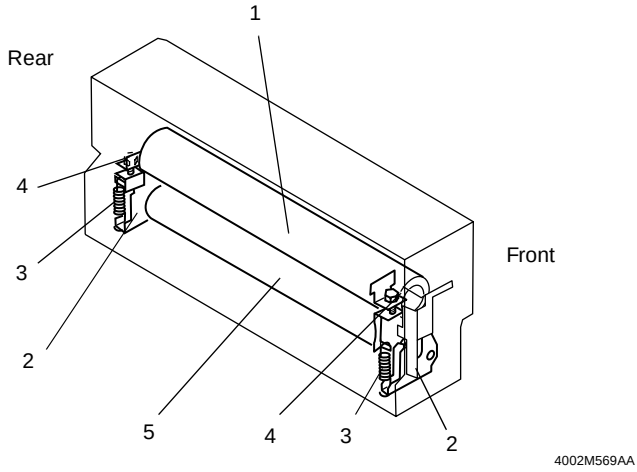

1. Upper Fusing Roller
2. Pressure Spring
3. Pressure Holder
4. Pressure Screw
5. Lower Fusing Roller

20-3. Fusing Roller Cleaning Mechanism

(1) Cleaning Web Take Up Mechanism

- The Cleaning Web wound around the Web Roller is taken up by the Web Take-Up Roller which is driven by the Cleaning Web Take-Up Motor.
- The Cleaning Web Take-Up Motor turns one turn in every 7 to 14 copies made to take up the Cleaning Web. (✻)

  ✻: The length of the Cleaning Web taken up per one revolution of the motor varies depending on the amount of Cleaning Web that has already been taken up. That is, in the beginnings of a new roll of Cleaning Web, a shorter length of web is taken up per one revolution of the motor, as there is very little amount of web taken up by the Web Take-Up Roller. The more the web is taken up, the longer the length of web taken up. The copier therefore refers to the count of the “Web Roller” counter and turns the motor one turn, in the beginnings, for every 7 copies made and, at the last stage, for every 14 copies made, thereby ensuring that a given amount of web is taken up for each copy.
- The Web Take-Up Roller shaft is provided with a clutch spring that prevents the roller from turning backward, thereby preventing the Cleaning Web from developing slack or wrinkling during take-up.
- There is a gage provided showing an approximate amount of Cleaning Web still available for use.

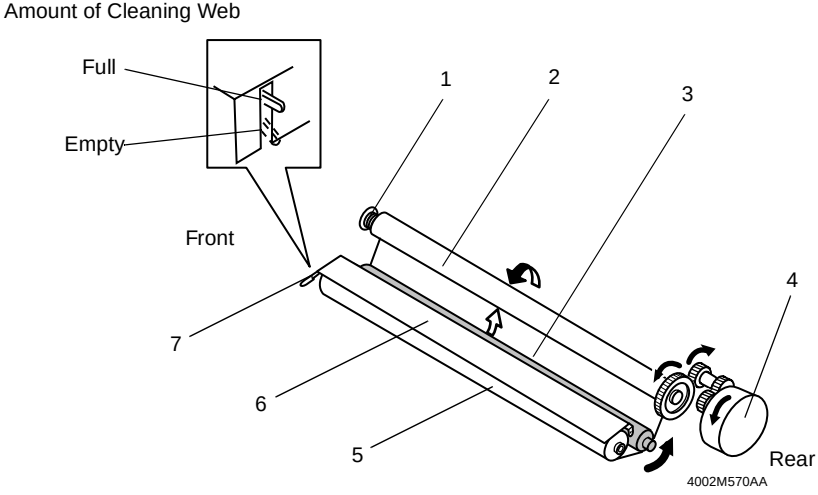

1. Clutch Spring
2. Web Take-Up Roller
3. Oil Supply/Web Feeding Roller
4. Cleaning Web Drive Motor M24
5. Web Roller
6. Web Regulating Plate
7. Gauge

	CONTROL SIGNAL	ON	OFF	WIRING DIAGRAM
M24	PWB-A PJ7A-15A	L	H	1 - D

20-4. Fusing Temperature Control

- The Fusing Roller Heater Lamp is turned ON and OFF to keep a set temperature on the surface of the Fusing Roller.
- The Fusing Roller surface temperature is detected by using a thermistor that translates the temperature to a corresponding electrical signal.
- If the Fusing Roller temperature becomes excessively high, the Fusing Roller Heater Lamp is shut down.
- The Lower Fusing Roller Heater Lamp is not turned ON during a copy cycle. During a warm-up cycle, both the Upper and Lower Fusing Roller Heater Lamps can be turned ON at the same time.
- The temperature for fusing temperature control can be selected from among three options (180, 190, and 200 °C) by using a Tech. Rep. Choice function.

Part Name	Symbol	Function	Control Temperature
Upper Fusing Roller Heater Lamp	H1	ON during a warm-up cycle, standby state, or a copy cycle.	-
Lower Fusing Roller Heater Lamp	H2	ON during a warm-up cycle or standby state.	-
Upper Fusing Roller Thermostat	TS1	Detects the surface temperature of the Fusing Roller becomes inordinately high	230 °C
Upper Fusing Roller Thermistor	TH1	Detects the surface temperature of the Upper Fusing Roller.	190 °C
Lower Fusing Roller Thermistor	TH2	Detects the surface temperature of the Lower Fusing Roller.	140 °C

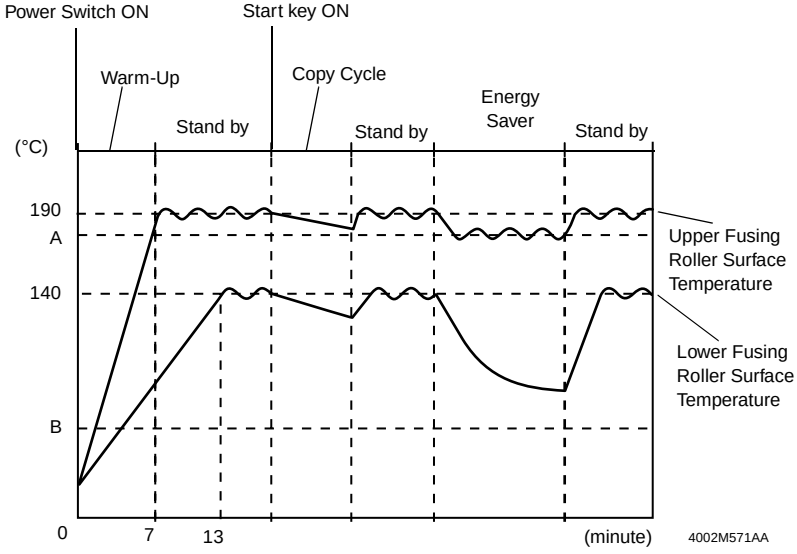

A: 45 sheet Copier-160 °C, 55 sheet Copier-175 °C
B: 45 sheet Copier-50 °C, 55 sheet Copier-85 °C

	CONTROL SIGNAL	ON	OFF	WIRING DIAGRAM
H1	PWB-A PJ7A-8A	L	H	1 - A
H2	PWB-A PJ7A-11A	L	H	1 - B
TH1	PWB-A PJ7A-9A	Analog Input		1 - B
TH2	PWB-A PJ7A-12A	Analog Input		1 - B

20-5. Mechanism and Control of Fusing Roller Small-Amount Turning

- If the Fusing Rollers remain stationary for more than 60 minute with the temperature control kept active, the areas of the two rollers in contact with each other are dented by heat and pressure. To prevent this situation, the motor is automatically energized once in a given period of time to turn the rollers 1/4 turns.
- The motor is energized once when the cumulative period of time counted, through which the motor remains deenergized, reaches a predetermined value.

	Cumulative Period of Time Counted
Motor Driven	55 minute

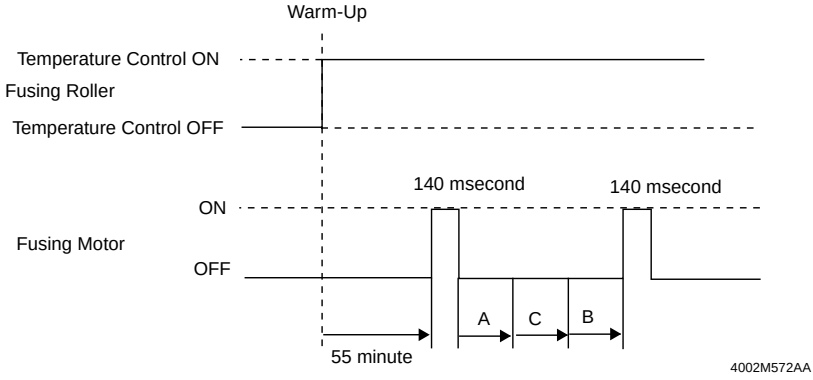

A + B = 55 minute

C: When the Front Door Interlock Switch is turned OFF and ON, or the Predrive OFF Rear Sensor is deactivated and activated.

20-6. CPM Control

The CPM (copies/minute) control is provided to keep good fusing performance even in multi-copy cycles and with the system power sourced from a single power outlet.

1. Overview

The Fusing Roller surface temperature goes down in a multi-copy cycle, resulting in degraded fusing performance.

↓

CPM is decreased.

↓

A greater interval results between sheets of paper, which gives time for the Fusing Roller surface temperature to increase and recovers good fusing performance.

↓

The normal CPM is set again.

2. Details

- During the CPM control, the copier provides a greater interval between scan motions and between sheets of paper, with the system speed remaining unchanged.
- The CPM control is usually activated if a multi-copy cycle is run immediately after the power has been turned ON in the morning when the Fusing Rollers remain cool.
- In times other than early morning, the Fusing Roller is heated from the inside and, even with a multi-copy cycle run, the CPM control is not readily activated.
- It can, however, be activated even at times other than early morning, when heavyweight (g/m^2) paper or large-size paper is used.

Normal	Paper Size	CPM Control
45 or 55 copies/minute	A4C	40 copies/minute

Multi-Copy Cycle Immediately After Warm-Up in Early morning.

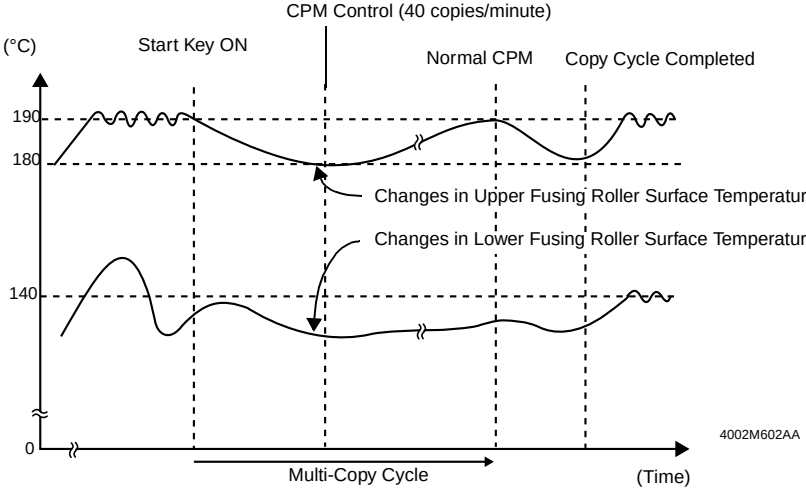

21. EXIT/DUPLEX SWITCHING SECTION

The Exit/Duplex Switching Unit switches the paper path to feed the copy out onto the Exit Tray or into the Turnover Unit.

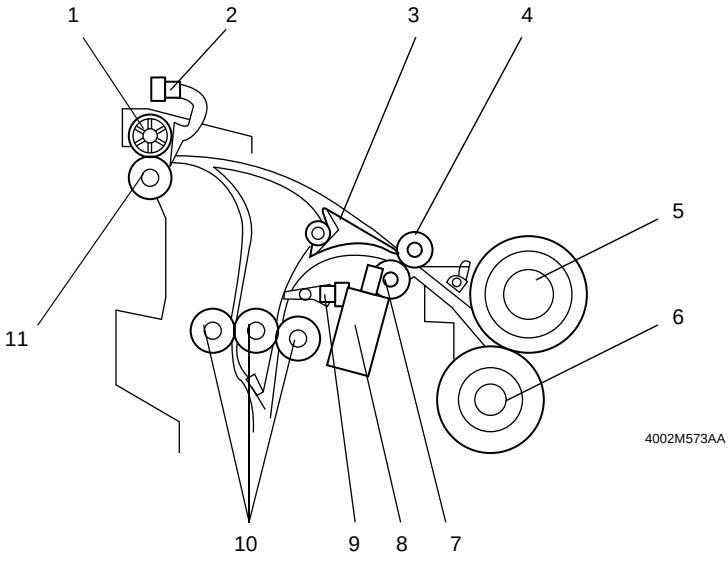

1. Exit Roll
2. Paper Exit Sensor PC9
3. Exit Switching Lever
4. Transport Roll
5. Upper Fusing Roller
6. Lower Fusing Roller
7. Transport Roller
8. Exit/Duplex Switching Solenoid SL3
9. Turnover Feed Entry Sensor PC7
10. Triple Roller
11. Exit Roller

21-1. Exit/Duplex Switching Mechanism

The paper path to the Exit Tray or to the Turnover Unit is selected by operating the Exit/ Turnover Switching Solenoid.

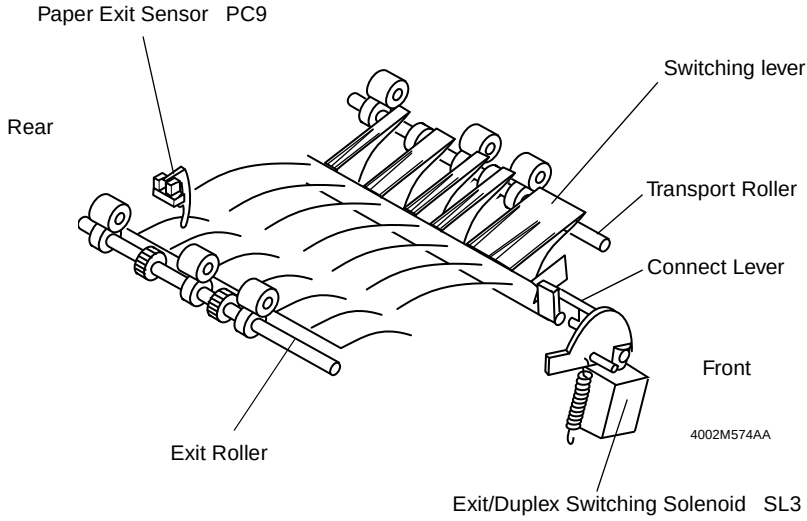

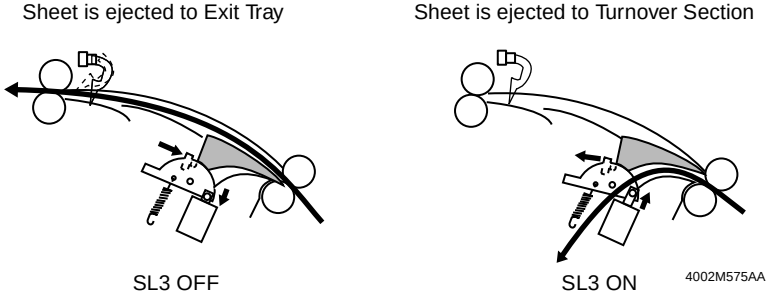

	CONTROL SIGNAL	ON	OFF	WIRING DIAGRAM
SL3	PWB-A PJ9A-2B	L	H	1 - F

	CONTROL SIGNAL	Blocked	Unblocked	WIRING DIAGRAM
PC9	PWB-A PJ9A-3A	H	L	1 - E

22. TURNOVER SECTION

The turnover unit reverses the copy fed from the Exit/Turnover Switching Unit and feeds it into the Duplex Unit.

Exit/Duplex Switching Section

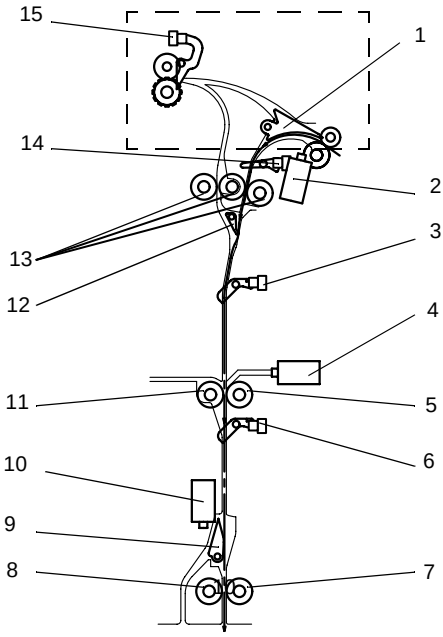

4002M576AA

1. Exit Switching Lever
2. Exit/Duplex Switching Solenoid SL3
3. Turnover Feed Jam Sensor PC8
4. Turnover Roller Retraction Solenoid SL1
5. Turnover Transport Roller 1
6. Turnover/Exit Sensor PC27
7. Turnover Transport Roller 2
8. Turnover Roll
9. Turnover Roller Switching Lever
10. Turnover Route Switching Solenoid SL6
11. Turnover Roller
12. Flapper
13. Triple Roller
14. Turnover Feed Entry Sensor PC7
15. Paper Exit Sensor PC9

22-1. Turnover Drive Mechanism

The Turnover Unit is driven by a motor.

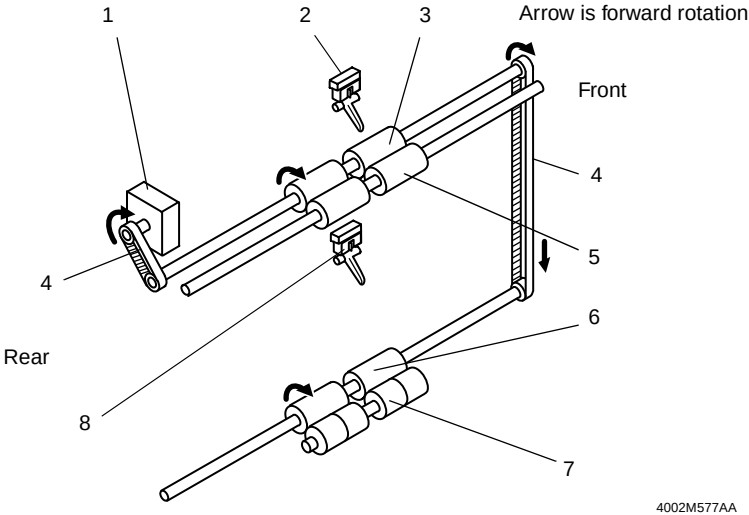

1. Turnover Motor M10
2. Turnover Feed Jam Sensor PC8
3. Turnover Transport Roller 1
4. Timing Belt
5. Turnover Roller
6. Turnover Transport Roller 2
7. Turnover Roll
8. Turnover/Exit Sensor PC27

22-2. Turnover Control

- The paper transport direction is selected by turning the motor forward or backward.
- A sensor on the paper path is used to determine the timing at which the direction of motor rotation is switched from backward to forward, or vice versa.

✻ Not Roller Separation

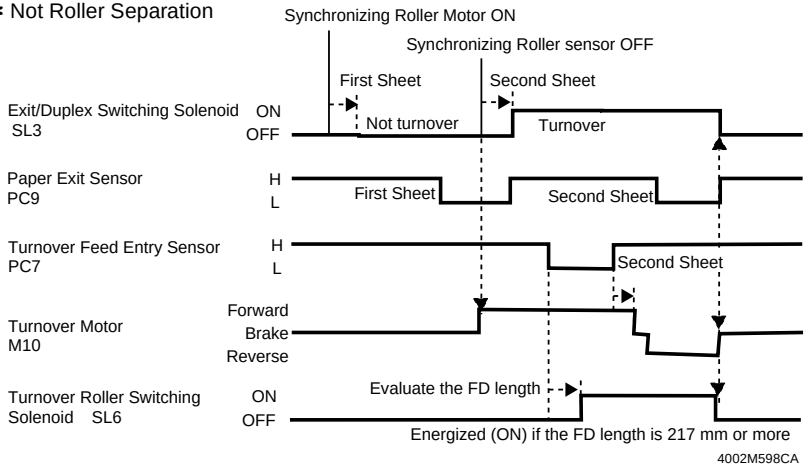

✻ Roller Separation

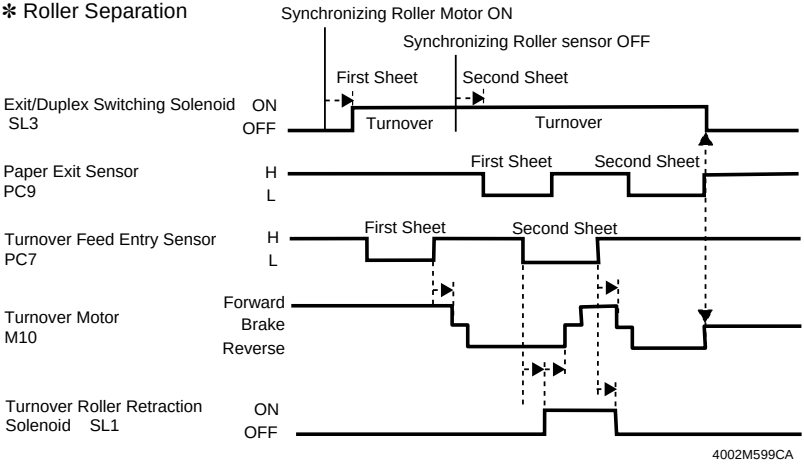

	CONTROL SIGNAL	ON	OFF	WIRING DIAGRAM
SL6	PWB-A PJ9A-4B	L	H	1 - H
M10	PWB-A PJ8A-12~15	Pulse Output		1 - I

	CONTROL SIGNAL	Blocked	Unblocked	WIRING DIAGRAM
PC7	PWB-A PJ8A-9	H	L	1 - H
PC8	PWB-A PJ8A-6	H	L	1 - G
PC27	PWB-A PJ8A-3	H	L	1 - G

22-3. Turnover Roller Separation Control

- The Turnover Drive Roller is temporarily separated from the Turnover Driven Roller in the event that, during a multi-copy cycle using large-sized paper, the leading edge of the subsequent paper reaches the Turnover Drive/Driven Rollers before the trailing edge of the preceding paper moves past them.
- The Turnover Drive/Driven Rollers are separated from each other by energizing and deenergizing the Turnover Roller Separation Solenoid.

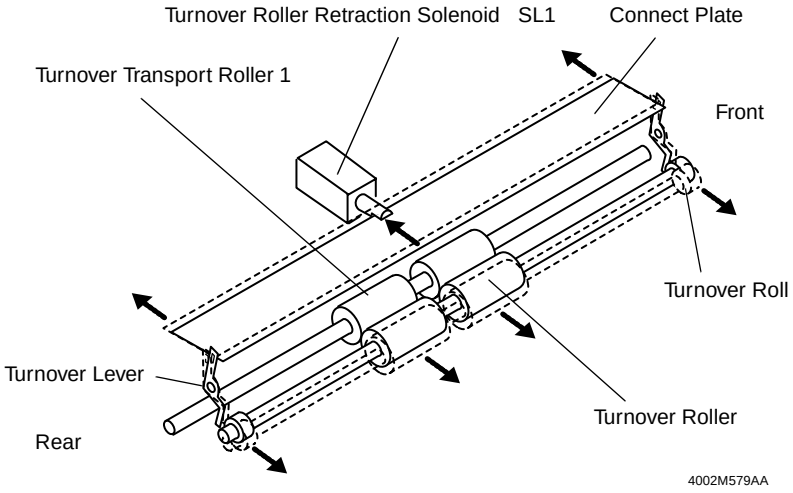

✻ Broken line shows the operation when SL1 is turned ON

	CONTROL SIGNAL	ON	OFF	WIRING DIAGRAM
SL1	PWB-A PJ9A-2B	L	H	1 - H

22-4. Turnover/Exit Mechanism

(1) Selection of Turnover or Exit Path

A flapper is used to select the paper exit path when the paper is to be turned over and fed out of the copier.

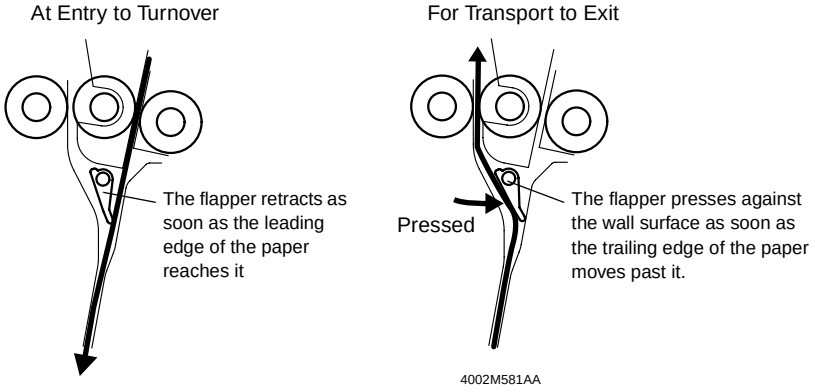

(2) Path for Accommodating Paper Longer Than A4L

To turn over and feed out of the copier paper longer than A4L (exceeding 216 mm), the Turnover Route Switching Solenoid is energized, thereby preventing a paper misfeed.

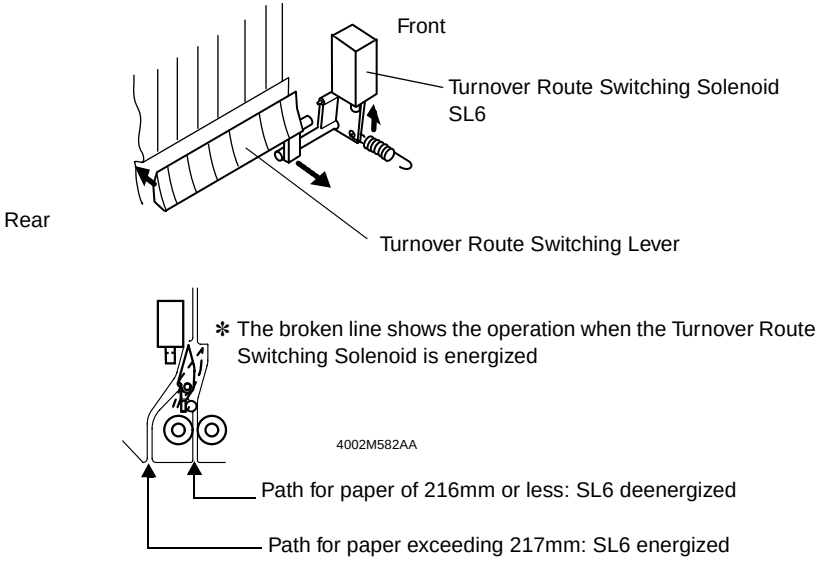

	CONTROL SIGNAL	ON	OFF	WIRING DIAGRAM
SL6	PWB-A PJ9A-4B	L	H	1 - H

23. OTHER MECHANISM

23-1. Memory Backup

Image Processing Board Backup RAM

- NVRAM (backup RAM) mounted on the Image Processing Board (PWB-B) stores the Touch Panel-related adjustment values, and User's Choice and other settings as well as counter values.
- NVRAM has a built-in battery that ensures that the contents of the memory are not lost even when power to the copier and PWB-B is shut down, or when NVRAM is demounted from the PWB-B.

N O T E S

- *When replacing the PWB-B, demount NVRAM from the old PWB-B and mount it to a new PWB-B.*
- *When the NVRAM is replaced, it is necessary to make all settings again to restore the contents of the memory. For the setting values, refer to the Adjust Label and those before replacement.*

✻ Paper Separator Corona voltage data entered on Adjust Label
The same Adjust Label as that used on other models is used for this copier model and the Paper Separator Corona voltage data are to be entered at the locations indicated below.

ADJUST(PRINTER)		SET	S/No			ADJUST(EDH)		SET			
REGIST (CD)	1st					ZOOM(FD)					
	2nd					FEED(2)					
	3rd					FEED(FD)					
	4th					FEED(CD)					
	Manual					S-ADF(FD)					
	LCT					S-ADF(CD)					
	DUPLEX					LOOP(1)					
	600dpi					LOOP(2)					
REGIST (CD)	400dpi					POSITION					
	600dpi										
ZOOM(FD)						SCH	B1	*1			
FUSING INPUT						SCH	B2	*2			
ID						SCH					
ATDC(SET)						SCH					
ADJUST(IR)						SCH					
ZOOM(CD)						SCH					
ZOOM(FD)						SCH					
SCALE(FD)						SCH					
SCALE(CD)						SCH					

4002M580AA

*1: Paper Separator Corona Voltage 1
*2: Paper Separator Corona Voltage 2

23-2. Flash Memory

- Flash memory is used for updating data when upgrading software.
- Insert a memory card, in which data has previously been written, into the socket on the Memory Board and perform the updating procedure. This rewrites the data.

Applicable Boards: PWB-A, PWB-B

For details, refer to DIS/REASSEMBLY, ADJUSTMENT.

N O T E

NEVER attempt to remove or insert the memory card with the copier turned ON.

23-3. Dehumidifying Mechanism

(1) PC Drum Dehumidifying

A heater is used to prevent condensation from forming on the surface of the PC Drum due to changes in temperature and humidity.

	Power Cord	Power Switch	Drum Dehumidifying Switch
Heater ON conditions	IN	OFF	ON

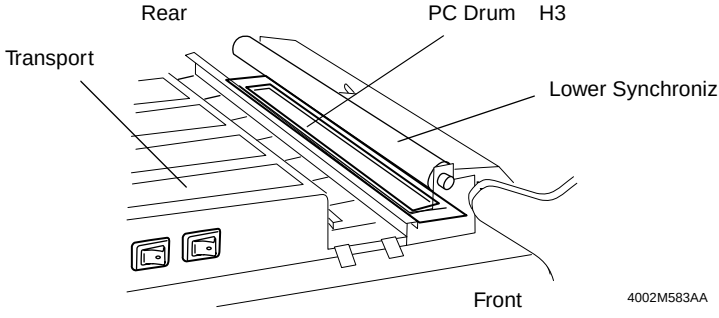

	CONTROL SIGNAL	ON	OFF	WIRING DIAGRAM
H3	PWB-C PJ5C-2B	L	H	4 - A

(2) Paper Dehumidifying Mechanism

A heater is used to prevent image transfer failure from occurring due to damp paper as a result of variations in the environmental conditions (temperature and humidity) surrounding the copier.

	Power Cord	Power Switch	Paper Dehumidifying Switch
Heater ON conditions	IN	OFF	ON

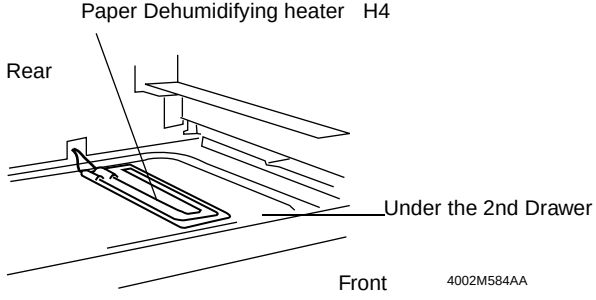

	CONTROL SIGNAL	ON	OFF	WIRING DIAGRAM
H4	CN215-2	L	H	27 - A

23-4. Cooling Mechanism

(1) IR Section Cooling Mechanism

A fan motor draws air from the outside into the inside of the copier to cool the IR (especially the Exposure lamp, and CCD Sensor), PH and PWB-B.

Speed Control		Plugged in*	Stand-by	Copy Cycle
PH Cooling Fan Motor 1	M19	Stop	Stop	Full
PH Cooling Fan Motor 2	M22	Stop	half	Full
IR Cooling Fan Motor	M52	Stop	half	Full

* Plugged in: Where Sleep or Auto Shut OFF is activated

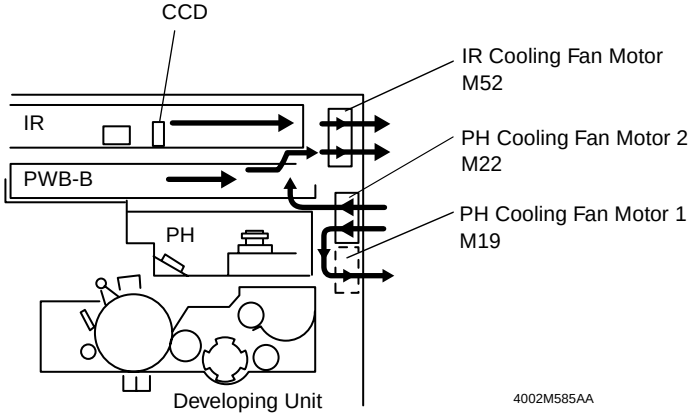

	CONTROL SIGNAL	ON	OFF	WIRING DIAGRAM
M19	PWB-IC PJ4IC-9	L	H	18 - H
M22	PWB-IC PJ4IC-3	L	H	18 - I
M52	PWB-IC PJ4IC-6	L	H	21 - H

(2) Fusing Section Cooling Mechanism

A fan motor draws air from the area around the Fusing Unit to the outside to prevent the copier interior temperature from running high.

Speed Control	Plugged In*	Wait	Copy	JAM	Trouble	Front Door open	pre-Heat
M23	stop	Half	Full	Half	Half	Half	Half

* Plugged in: Where Sleep or Auto Shut OFF is activated

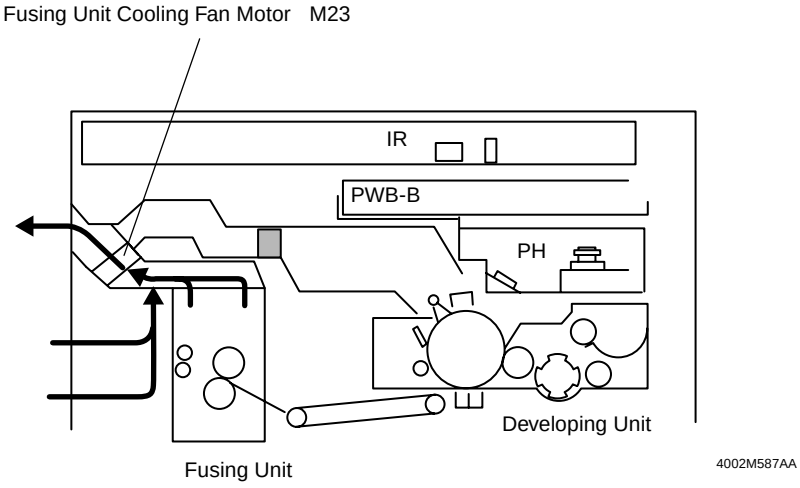

	CONTROL SIGNAL	ON	OFF	WIRING DIAGRAM
M23	PWB-C PJ13C-3	L	H	1 - C

(3) Copier Interior Cooling Mechanism

A fan motor draws air from the inside of the copier to prevent the copier interior temperature from running high. The Ozone Filter absorbs ozone produced inside the copier.

Speed Control	Plugged In*	Wait	Copy	JAM	Trouble	Front Door open	pre-Heat
M18	stop	stop	Full	stop	stop	stop	stop

* Plugged in: Where Sleep or Auto Shut OFF is activated

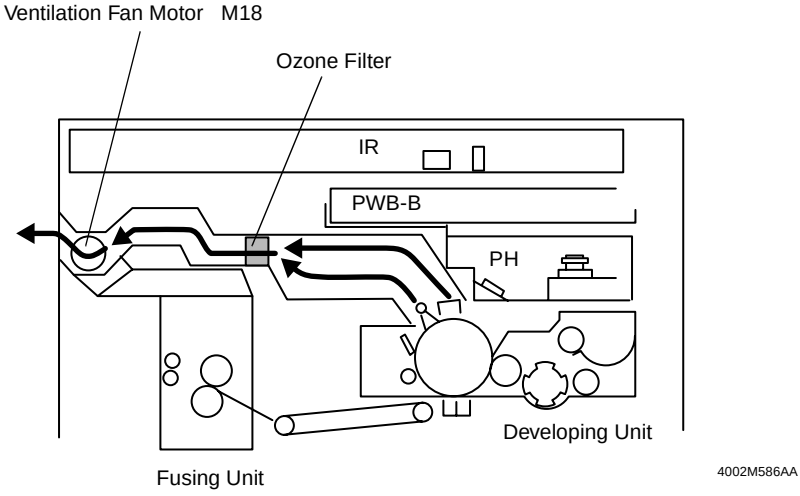

	CONTROL SIGNAL	ON	OFF	WIRING DIAGRAM
M18	PWB-A PJ9A-5B	L	H	13 - B

(4) Power Supply Section Cooling Mechanism

A fan motor draws air from the area around the Power Supply Unit to the outside to prevent the Power Supply Unit temperature from running high.

Speed Control	Plugged In*	Wait	Copy	JAM	Trouble	Front Door open	pre-Heat
M15	stop	Half	Full	stop	stop	stop	stop
M16	stop	Half	Full	Half	Half	Half	Half

* Plugged in: Where Sleep or Auto Shut OFF is activated

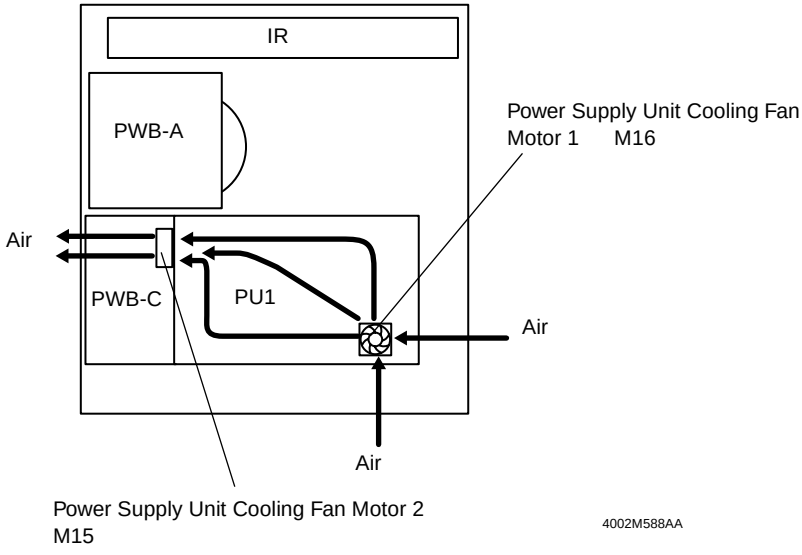

	CONTROL SIGNAL	ON	OFF	WIRING DIAGRAM
M15	PWB-A PJ6A-13	L	H	13 - A
M16	PWB-C PJ3C-3	L	H	13 - B

Copyright
2000 MINOLTA Co., Ltd.
Printed in Japan

Use of this manual should be strictly supervised to avoid disclosure of confidential information.

MINOLTA Co., Ltd.

4002-7990-11 00091200
11563

Di450/Di550

SERVICE MANUAL

[GENERAL]