EDH-3
PF-115 PF-208 PF-7D
C-306/C-306L
FN-105/FN-106 DT-105

OPTION
SERVICE MANUAL

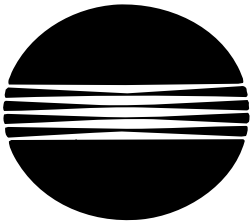

MINOLTA

Safety Precautions for Inspection and Service

When performing inspection and service procedures, observe the following precautions to prevent accidents and ensure utmost safety.

✻ Depending on the model, some of the precautions given in the following do not apply.

Different markings are used to denote specific meanings as detailed below.



WARNING Indicates a potentially hazardous situation which, if not avoided, could result in death or serious injury.



CAUTION Indicates a potentially hazardous situation which, if not avoided, may result in minor or moderate injury. It may also be used to alert against unsafe practices.

The following graphic symbols are used to give instructions that need to be observed.



Used to call the service technician's attention to what is graphically represented inside the marking (including a warning).



Used to prohibit the service technician's from doing what is graphically represented inside the marking.



Used to instruct the service technician's to do what is graphically represented inside the marking.

 WARNING

1. Always observe precautions.



- Parts requiring special attention in this product will include a label containing the mark shown on the left plus precautionary notes. Be sure to observe the precautions.
- Be sure to observe the "Safety Information" given in the Operator's Manual.

2. Before starting the procedures, be sure to unplug the power cord.



- This product contains a high-voltage unit and a circuit with a large current capacity that may cause an electric shock or burn.
- The product also contains parts that can jerk suddenly and cause injury.
- If this product uses a laser, laser beam leakage may cause eye damage or blindness.

3. Use the specified parts.



- For replacement parts, always use the genuine parts specified in the manufacturer's parts manual. Installing a wrong or unauthorized part could cause dielectric breakdown, overload, or undermine safety devices resulting in possible electric shock or fire.
- Replace a blown electrical fuse or thermal fuse with its corresponding genuine part specified in the manufacturer's parts manual. Installing a fuse of a different make or rating could lead to a possible fire. If a thermal fuse blows frequently, the temperature control system may have a problem and action must be taken to eliminate the cause of the problem.

4. Handle the power cord with care and never use a multiple outlet.



- Do not break, crush or otherwise damage the power cord. Placing a heavy object on the power cord, or pulling or bending it may damage it, resulting in a possible fire or electric shock.
- Do not use a multiple outlet to which any other appliance or machine is connected.
- Be sure the power outlet meets or exceeds the specified capacity.

5. Be careful with the high-voltage parts.



- A part marked with the symbol shown on the left carries a high voltage. Touching it could result in an electric shock or burn. Be sure to unplug the power cord before servicing this part or the parts near it.

6. Do not work with wet hands.



- Do not unplug or plug in the power cord, or perform any kind of service or inspection with wet hands. Doing so could result in an electric shock.

7. Do not touch a high-temperature part.



- A part marked with the symbol shown on the left and other parts such as the exposure lamp and fusing roller can be very hot while the machine is energized. Touching them may result in a burn.
- Wait until these parts have cooled down before replacing them or any surrounding parts.

8. Maintain a grounded connection at all times. (This item may not apply in the USA.)



- Be sure to connect the ground wire to the ground terminal even when performing an inspection or repair. Without proper grounding, electrical leakage could result in an electric shock or fire.
- Never connect the ground wire to a gas pipe, water pipe, telephone ground wire, or a lightning conductor.

9. Do not remodel the product.



- Modifying this product in a manner not authorized by the manufacturer may result in a fire or electric shock. If this product uses a laser, laser beam leakage may cause eye damage or blindness.

10. Restore all parts and harnesses to their original positions.



- To promote safety and prevent product damage, make sure the harnesses are returned to their original positions and properly secured in their clamps and saddles in order to avoid hot parts, high-voltage parts, sharp edges, or being crushed.
- To promote safety, make sure that all tubing and other insulating materials are returned to their original positions. Make sure that floating components mounted on the circuit boards are at their correct distance and position off the boards.

CAUTION

1. Precautions for Service Jobs

- A toothed washer and spring washer, if used originally, must be reinstalled. Omitting them may result in contact failure which could cause an electric shock or fire.
- When reassembling parts, make sure that the correct screws (size, type) are used in the correct places. Using the wrong screw could lead to stripped threads, poorly secured parts, poor insulating or grounding, and result in a malfunction, electric shock or injury.
- Take great care to avoid personal injury from possible burrs and sharp edges on the parts, frames and chassis of the product.
- When moving the product or removing an option, use care not to injure your back or allow your hands to be caught in mechanisms.

2. Precautions for Servicing with Covers and Parts Removed

- Wherever feasible, keep all parts and covers mounted when energizing the product.
- If energizing the product with a cover removed is absolutely unavoidable, do not touch any exposed live parts and use care not to allow your clothing to be caught in the moving parts. Never leave a product in this condition unattended.
- Never place disassembled parts or a container of liquid on the product. Parts falling into, or the liquid spilling inside, the mechanism could result in an electric shock or fire.
- Never use a flammable spray near the product. This could result in a fire.
- Make sure the power cord is unplugged before removing or installing circuit boards or plugging in or unplugging connectors.
- Always use the interlock switch actuating jig to actuate an interlock switch when a cover is opened or removed. The use of folded paper or some other object may damage the interlock switch mechanism, possibly resulting in an electric shock, injury or blindness.

3. Precautions for the Working Environment

- The product must be placed on a flat, level surface that is stable and secure.
- Never place this product or its parts on an unsteady or tilting workbench when servicing.
- Provide good ventilation at regular intervals if a service job must be done in a confined space for a long period of time.
- Avoid dusty locations and places exposed to oil or steam.
- Avoid working positions that may block the ventilation ports of the product.

4. Precautions for Handling Batteries

- Replace a rundown battery with the same type as specified in the manufacturer's parts manual.
- Before installing a new battery, make sure of the correct polarity of the installation or the battery could burst.
- Dispose of used batteries according to the local regulations. Never dispose of them at the user's premises or attempt to try to discharge one.

5. Precautions for the Laser Beam (Only for Products Employing a Laser)

- Removing the cover marked with the following caution label could lead to possible exposure to the laser beam, resulting in eye damage or blindness. Be sure to unplug the power cord before removing this cover.
- If removing this cover while the power is ON is unavoidable, be sure to wear protective laser goggles that meet specifications.
- Make sure that no one enters the room when the machine is in this condition.
- When handling the laser unit, observe the “Precautions for Handling Laser Equipment.”



1167P001AA

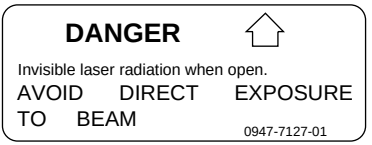

1144D270AA

Other Precautions

- To reassemble the product, reverse the order of disassembly unless otherwise specified.
- While the product is energized, do not unplug or plug connectors into the circuit boards or harnesses.
- The magnet roller generates a strong magnetic field. Do not bring it near a watch, floppy disk, magnetic card, or CRT tube.
- An air gun and vacuum cleaner generates a strong electrostatic charge that can destroy the ATDC sensor and other sensors. Before cleaning a component with one of these devices, be sure to remove all the sensors. Otherwise, use a blower brush and cloth when cleaning parts.
- When handling circuit boards with MOS ICs, observe the “INSTRUCTIONS FOR HANDLING THE PWBs WITH MOS ICs” (applicable only to the products using MOS ICs).
- The PC Drum is a very delicate component. Observe the precautions given in “HANDLING OF THE PC DRUM” because mishandling may result in serious image problems.
- Note that replacement of a circuit board may call for readjustments or resetting of particular items, or software installation.
- After completing a service job, perform a safety check. Make sure that all parts, wiring and screws are returned to their original positions.
- Check the area surrounding the service site for any signs of damage, wear or need of repair.
- Do not pull out the toner hopper while the toner bottle is turning. This could result in a damaged hopper motor or locking mechanism.
- If the product is to be run with the front door open, make sure that the toner hopper is in the locked position.

Used Batteries Precautions

ALL Areas

CAUTION

Danger of explosion if battery is incorrectly replaced.
Replace only with the same or equivalent type recommended by the manufacturer.
Dispose of used batteries according to the manufacturer's instructions.

Germany

VORSICHT!

Explosionsgefahr bei unsachgemäßem Austausch der Batterie.
Ersatz nur durch denselben oder einen vom Hersteller empfohlenen ähnlichen Typ.
Entsorgung gebrauchter Batterien nach Angaben des Herstellers.

France

ATTENTION

Ily a danger d'explosion s'ily a remplacement incorrec de la batterie.
Remplacer uniquement avec une batterie du meme type ou d'un type équivalent recommande par le constructueur.
Mettre au rebut les batteries usageés conformément aux instructions du fabricant.

Denmark

ADVARSEL!

Lithiumbatteri - Eksplosionsfare ved fejlagtig håndtering Udskiftning må kun ske med batteri af samme fabrikat og type.
Levér det brugte batteri tilbage til leverandøren.

Norway

ADVARSEL

Eksplosjonsfare ved feilaktig skifte av batteri.
Benytt samme batteritype eller en tilsvarende type anbefalt av apparatfabrikanten.
Brukte batterier kasseres i henhold til fabrikantens instruksjoner.

Sweden

VARNING

Explosionsfara vid felaktigt batteribyte.
Använd samma batterityp eller en ekvivalent typ som rekommenderas av apparattillverkaren.
Kassera använt batteri enligt fabrikantens instruktion.

Finland

VAROITUS

Paristo voi räjähtää, los se on virheellisesti asennettu.
Vaihda paristo ainoastaan laitevalmistajan suosittelemaan tyyppiin. Hävitä Käytetty paristo valmistajan ohjeiden mukaisesti.

PRECAUTIONS FOR SERVICE

When performing inspection and service procedures, observe the following precautions to prevent mishandling of the machine and its parts.
✻ Depending on the model, some of the precautions given in the following do not apply.

Precautions Before Service

- When the user is using a word processor or personal computer from a wall outlet of the same line, take necessary steps to prevent the circuit breaker from opening due to overloads.
- Never disturb the LAN by breaking or making a network connection, altering termination, installing or removing networking hardware or software, or shutting down networked devices without the knowledge and express permission of the network administrator or the shop supervisor.

How to Use this Book

1. DIS/REASSEMBLY, ADJUSTMENT
- To reassemble the product, reverse the order of disassembly unless otherwise specified.

2. TROUBLESHOOTING
- If a component on a PWB or any other functional unit including a motor is defective, the text only instructs you to replace the whole PWB or functional unit and does not give troubleshooting procedures applicable within the defective unit.
- All troubleshooting procedures contained herein assume that there are no breaks in the harnesses and cords and all connectors are plugged into the right positions.
- The procedures preclude possible malfunctions due to noise and other external causes.

Precautions for Service

- Check the area surrounding the service site for any signs of damage, wear or need of repair.
- Keep all disassembled parts in good order and keep tools under control so that none will be lost or damaged.
- After completing a service job, perform a safety check. Make sure that all parts, wiring and screws are returned to their original positions.
- Do not pull out the toner hopper while the toner bottle is turning. This could result in a damaged motor or locking mechanism.
- If the product is to be run with the front door open, make sure that the toner hopper is in the locked position.
- Do not use an air gun or vacuum cleaner for cleaning the ATDC Sensor and other sensors, as they can cause electrostatic destruction. Use a blower brush and cloth. If a unit containing these sensors is to be cleaned, first remove the sensors from the unit.

Precautions for Dis/Reassembly

- Be sure to unplug the copier from the outlet before attempting to service the copier.
- The basic rule is not to operate the copier anytime during disassembly. If it is absolutely necessary to run the copier with its covers removed, use care not to allow your clothing to be caught in revolving parts such as the timing belt and gears.
- Before attempting to replace parts and unplug connectors, make sure that the power cord of the copier has been unplugged from the wall outlet.
- Be sure to use the Interlock Switch Actuating Jig whenever it is necessary to actuate the Interlock Switch with the covers left open or removed.
- Do not plug in or unplug print jacks on the PWB or connect or disconnect the PWB connectors while power is being supplied to the copier.
- Never use flammable sprays near the copier.
- A battery (lithium, nickel-cadmium, etc.) is used in this machine. Do not charge or short circuit it and make sure of the correct polarity at replacement.
- A used battery should be disposed of according to the local regulations and never be discarded casually or left unattended at the user's premises.
- When reassembling parts, make sure that the correct screws (size, type) and toothed washer are used in the correct places.
- If it becomes necessary to replace the thermal fuse or any other fuse mounted on a board, be sure to use one of the rating marked on the blown fuse. Always note the rating marked on the fuse, as the rating and mounting site or number used are subject to change without notice.

Precautions for Circuit Inspection

- Never create a closed circuit across connector pins except those specified in the text and on the printed circuit.
- When creating a closed circuit and measuring a voltage across connector pins specified in the text, be sure to use the GND wire.

Handling of PWBs

1. During Transportation/Storage:

- During transportation or when in storage, new P.W. Boards must not be indiscriminately removed from their protective conductive bags.
- Do not store or place P.W. Boards in a location exposed to direct sunlight and high temperature.
- When it becomes absolutely necessary to remove a Board from its conductive bag or case, always place it on its conductive mat in an area as free as possible from static electricity.
- Do not touch the pins of the ICs with your bare hands.
- Protect the PWBs from any external force so that they are not bent or damaged.

2. During Inspection/Replacement:

- Avoid checking the IC directly with a multimeter; use connectors on the Board.
- Never create a closed circuit across IC pins with a metal tool.
- Before unplugging connectors from the P.W. Boards, make sure that the power cord has been unplugged from the outlet.
- When removing a Board from its conductive bag or conductive case, do not touch the pins of the ICs or the printed pattern. Place it in position by holding only the edges of the Board.
- When touching the PWB, wear a wrist strap and connect its cord to a securely grounded place whenever possible. If you cannot wear a wrist strap, touch a metal part to discharge static electricity before touching the PWB.
- Note that replacement of a PWB may call for readjustments or resetting of particular items.

Handling of Other Parts

- The magnet roller generates a strong magnetic field. Do not bring it near a watch, floppy disk, magnetic card, or CRT tube.

Handling of the PC Drum

✻ Only for Products Not Employing an Imaging Cartridge.

1. During Transportation/Storage:

- Use the specified carton whenever moving or storing the PC Drum.
- The storage temperature is in the range between –20°C and +40°C.
- In summer, avoid leaving the PC Drum in a car for a long time.

2. Handling:

- Ensure that the correct PC Drum is used.
- Whenever the PC Drum has been removed from the copier, store it in its carton or protect it with a Drum Cloth.
- The PC Drum exhibits greatest light fatigue after being exposed to strong light over an extended period of time. Never, therefore, expose it to direct sunlight.
- Use care not to contaminate the surface of the PC Drum with oil-base solvent, fingerprints, and other foreign matter.
- Do not scratch the surface of the PC Drum.
- Do not apply chemicals to the surface of the PC Drum.
- Do not attempt to wipe clean the surface of the PC Drum.

If, however, the surface is contaminated with fingerprints, clean it using the following procedure.

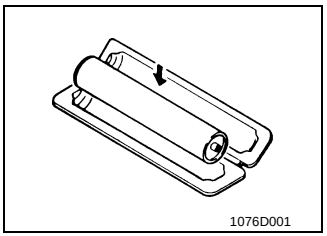

1. Place the PC Drum into one half of its carton.

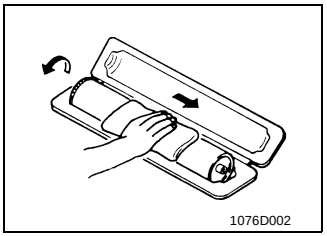

2. Gently wipe the residual toner off the surface of the PC Drum with a dry, Dust-Free Cotton Pad.

A. Turn the PC Drum so that the area of its surface on which the line of toner left by the Cleaning Blade is present is facing straight up. Wipe the surface in one continuous movement from the rear edge of the PC Drum to the front edge and off the surface of the PC Drum.

B. Turn the PC Drum slightly and wipe the newly exposed surface area with a CLEAN face of the Dust-Free Cotton Pad. Repeat this procedure until the entire surface of the PC Drum has been thoroughly cleaned.

✻ At this time, always use a CLEAN face of the dry Dust-Free Cotton Pad until no toner is evident on the face of the Pad after wiping.

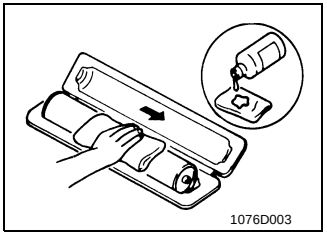

3. Soak a small amount of either ethyl alcohol or isopropyl alcohol into a clean, unused Dust-Free Cotton Pad which has been folded over into quarters. Now, wipe the surface of the PC Drum in one continuous movement from its rear edge to its front edge and off its surface one to two times.

✻ Never move the Pad back and forth.

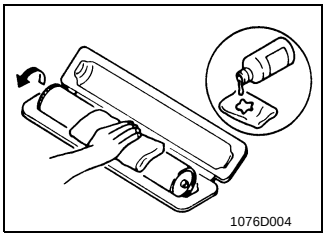

4. Using the SAME face of the Pad, repeat the procedure explained in the latter half of step 3 until the entire surface of the PC Drum has been wiped. Always OVERLAP the areas when wiping. Two complete turns of the PC Drum would be appropriate for cleaning.

NOTES

- *Even when the PC Drum is only locally dirtied, wipe the entire surface.*
- *Do not expose the PC Drum to direct sunlight. Clean it as quickly as possible even under interior illumination.*
- *If dirt remains after cleaning, repeat the entire procedure from the beginning one more time.*

Handling of the Imaging Cartridge

✻ Only for Products Employing an Imaging Cartridge.

1. During Transportation/Storage:

- The storage temperature is in the range between –20°C and +40°C.
- In summer, avoid leaving the Imaging Cartridge in a car for a long time.

2. Handling:

- Store the Imaging Cartridge in a place that is not exposed to direct sunlight.

3. Precautionary Information on the PC Drum Inside the Imaging Cartridge:

- Use care not to contaminate the surface of the PC Drum with oil-base solvent, fingerprints, and other foreign matter.
- Do not scratch the surface of the PC Drum.
- Do not attempt to wipe clean the surface of the PC Drum.

INDEX (OPTION)

EDH-3

PF-115 PF-208 PF-7D

C-306/C-306L

FN-105/FN-106 DT-105

EDH-3

SERVICE MANUAL

CONTENTS

GENERAL, MECHANICAL/ELECTRICAL

1. SPECIFICATIONS M-1
2. EXTERIOR VIEW M-2
3. CROSS-SECTIONAL VIEW M-3
4. DRIVE SYSTEM M-4
5. ELECTRICAL COMPONENT LAYOUT M-5
6. MODES M-6
   - 6-1. Mixed Original Detection Mode M-6
   - 6-2. Mixed-Size (AMS) Mode M-6
   - 6-3. One-Sided Mode M-6
   - 6-4. Two-Sided Mode M-6
   - 6-5. Single Feed Mode M-6
7. TAKE-UP SECTION M-7
   - 7-1. Document Handling Tray Raising/Lowering Mechanism M-8
     - (1) Pick-Up Motor Control M-8
     - (2) Document Handling Tray Ascent/Descent Motion M-9
   - 7-2. Document Take-Up and Feed Mechanism M-10
     - (1) Take-Up Motor Control M-10
   - 7-3. Single Feed Mechanism M-11
8. TRANSPORT SECTION M-12
   - 8-1. Document Transport Mechanism M-13
9. TURNOVER/EXIT MECHANISM M-14
   - 9-1. Turnover/Exit Document Transport Mechanism M-15
   - 9-2. Turnover/Exit Switching Mechanism M-16
   - 9-3. Document Transport Path in Each of the EDH Operating Modes M-18
     - (1) One-Sided and Single Feed Mode M-18
     - (2) Two-Sided Mode M-19
     - (3) Mixed Size (AMS) Mode M-20
10. OTHER FEATURES M-21
    - 10-1.Size Detection System M-21
    - 10-2.EDH Raised/Lowered Position Detection M-21
    - 10-3.EDH Cooling System M-22

DIS/REASSEMBLY, ADJUSTMENT

1. MAINTENANCE SCHEDULE D-1
2. DISASSEMBLY D-2
   - 2-1. Removal of Covers D-2
   - 2-2. Removal of the Take-Up Roller, Feed Roller, and Separator Roller D-3
     - (1) Take-Up Roller and Feed Roller D-3
     - (2) Separator Roller D-3
   - 2-3. Cleaning of the Registration Sensor D-4
   - 2-4. Cleaning of the Registration Roller 1/Rolls D-4
   - 2-5. Cleaning of the Registration Roller 2/Rolls D-5
   - 2-6. Removal of the Pick-Up Motor Assy D-5
   - 2-7. Belt Mounting Positions D-7
3. ADJUSTMENT D-8

3-1. Check and Adjustment Items Involved with Cleaning and Replacement of Parts D-8
3-2. Adjustment of the stroke of Duplex Turnover Solenoid and Exit Turnover Solenoid D-9
3-3. Skew Adjustment D-9
3-4. Types of “Function (EDH)” Adjustments D-10
3-5. Function (EDH) Adjustments D-10
(1) Position/Zoom (FD) D-10
(2) Position (CD) D-11
(3) S-ADF Mode (CD) D-12
(4) S-ADF Mode (FD) D-12
(5) Skew Check D-13
3-6. Adjust Mode D-14

TROUBLESHOOTING

1. I/O CHECK T-1
2. EDH PAPER PASSAGE CHECK T-1
3. MISFEED DETECTION T-2
3-1. Types of Misfeed Detection and Detection Timing T-3
4. MISFEED CLEARING PROCEDURES T-4
(1) Misfeed at the take-up section T-4
(2) Misfeed at the transport section T-4
(3) Misfeed at turnover section (in Two-Sided mode) T-5
(4) Misfeed at turnover section (during ejection) and exit section T-5
5. MALFUNCTION DETECTION T-6
6. MALFUNCTION TROUBLESHOOTING PROCEDURES T-6
(1) C0044: Fan Motor malfunction T-6
(2) C143E: Pick-Up Motor malfunction T-7

GENERAL, MECHANICAL/ELECTRICAL

1. SPECIFICATIONS

Name	:	Electronic Document Handler
Type	:	Paper take-up: U-turn, take-up from top of stack Transport: Flow-through Turnover: Switchback Exit: Straight
Installation	:	Screw-mounted to machine
Type of Document	:	Plain paper 1-sided mode: 50 to 110 g/m^2 2-sided mode: 60 to 90 g/m^2 Mixed-size mode: 60 to 90 g/m^2 Single feed mode: 35 to 157 g/m^2
Detectable Document Sizes	:	A5L, A4CL, B4L, A3L, Foolscap L, 5-1/2 × 8-1/2L, 8-1/2 × 11CL, 8-1/2 × 14L, 11 × 17L
Capacity	:	Document Handling Tray: 100 sheets (80 g/m^2) Document Exit Tray: 100 sheets (80 g/m^2)
Document Alignment	:	One side (in the rear)
Document Loading	:	Face up; face down for single feed mode
Modes	:	1-Sided, 2-Sided, Mixed Size (AMS), and Single Feed
Power Requirements	:	DC5 V, DC24 V (supplied from machine)
Power Consumption	:	96 W max.
Dimensions	:	Width: 662 mm (26) Depth: 579 mm (22-3/4) Height: 139 mm (5-1/2)
Mass	:	13.0 kg (28-3/4 lb.)
Operating Environment	:	Same as machine

Types of Originals Not Guaranteed for Reliable Feeding:

Original Type	Likely Problems
Curled sheets (amount of curl: 10 to 15 mm)	Bent corners, ejection failure
Heat-sensitive paper	Creases, ejection failure
Coated sheets	Take-up failure, transport failure
Sheets with significantly uneven surfaces (letterheads, etc.)	Take-up failure
Translucent paper	Take-up failure, transport failure
Just-ejected sheets	Take-up failure, transport failure
Perforated sheets (loose-leaf paper, etc.)	Take-up failure, transport failure
Sheets weighing 40 or more to less than 50 g/m^2	Folded leading edge, transport failure
Sheets folded in half or Z-folded	Transport failure, distorted image
Sheets with two to four holes	Transport failure

2. EXTERIOR VIEW

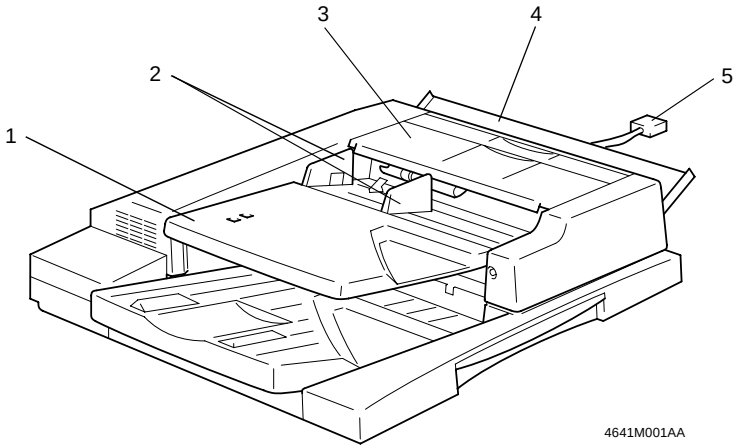

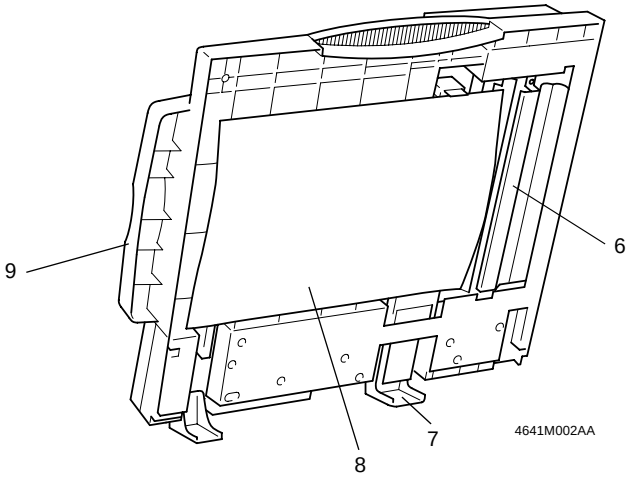

1. Document Handling Tray
2. Document Guide Plate
3. Top Cover
4. Single Feed Tray
5. Hookup Cord
6. Read Guide
7. Hinge
8. Original Pressure Pad
9. Document Exit Tray

3. CROSS-SECTIONAL VIEW

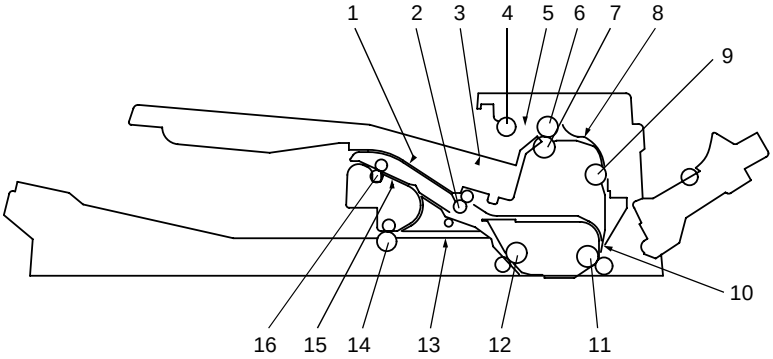

4641M003AA

1. Duplex Turnover Sensor (PC4)
2. Turnover Roller 1
3. Empty Sensor (PC1)
4. Take-Up Roller
5. Pick-Up Raised Position Sensor (PC14)
6. Feed Roller
7. Separator Roller
8. Paper Separation Sensor (PC13)
9. Transport Roller
10. Registration Sensor (PC2)
11. Registration Roller 1
12. Registration Roller 2
13. Exit Sensor (PC3)
14. Exit Roller
15. Exit Turnover Sensor (PC5)
16. Turnover Roller 2

4. DRIVE SYSTEM

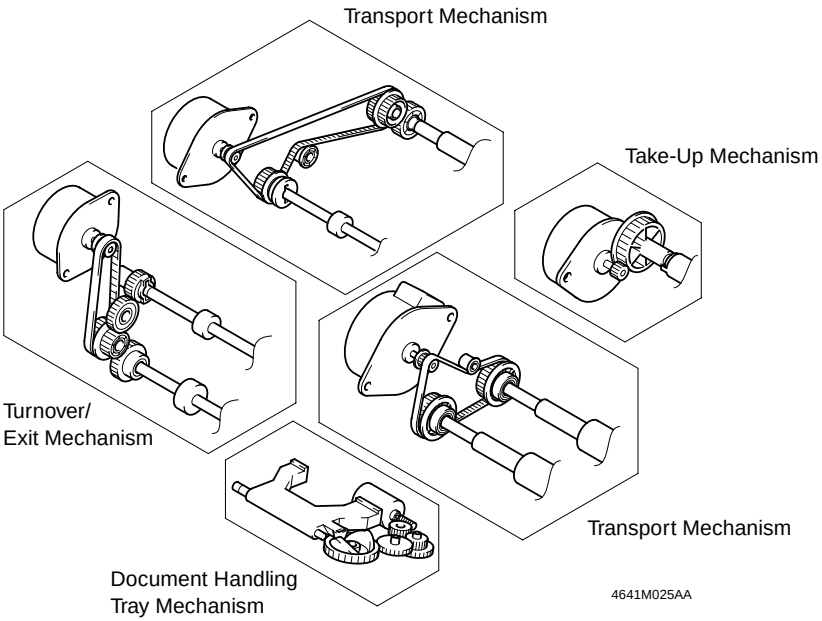

5. ELECTRICAL COMPONENT LAYOUT

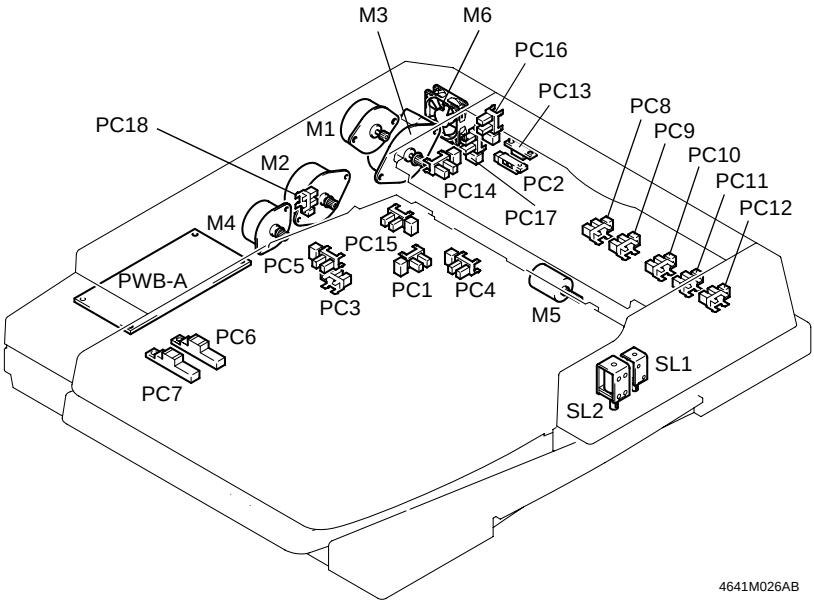

Code	Name	Code	Name
PWB-A	Main Control Board	PC6	Paper Length Sensor 1
M1	Take-Up Motor	PC7	Paper Length Sensor 2
M2	Transport Motor	PC8	Paper Width Sensor 1
M3	Reading Motor	PC9	Paper Width Sensor 2
M4	Exit Motor	PC10	Paper Width Sensor 3
M5	Pick-Up Motor	PC11	Paper Width Sensor 4
M6	Fan Motor	PC12	Paper Width Sensor 5
SL1	Duplex Turnover Solenoid	PC13	Paper Separation Sensor
SL2	Exit Turnover Solenoid	PC14	Pick-Up Raised Position Sensor
PC1	Empty Sensor	PC15	Pick-Up Lower Position Sensor
PC2	Registration Sensor	PC16	Manual Feed Open/Close Sensor
PC3	Exit Sensor	PC17	Paper Take-Up Open/Close Sensor
PC4	Duplex Turnover Sensor	PC18	Turnover Open/Close Sensor
PC5	Exit Turnover Sensor		

6. MODES

6-1. Mixed Original Detection Mode

- The EDH detects the size for each original and the machine uses the size data to select the appropriate paper source from which it takes up and feeds a sheet of paper of the same size as the original.

6-2. Mixed-Size (AMS) Mode

- Since the zoom ratio (the speed at which the original is transported while it is being scanned) must be varied according to the size of the original, the paper path for the Two-Sided mode is used to turn over the original.
- After the size of the original has been detected, the original is scanned as follows according to the set mode.

(One-Sided mode)

- The original is once again turned over and the Scanner reads the image.

(Two-Sided mode)

- The Scanner reads the second side of the original and then the original is turned over again to let the Scanner read the first side.

6-3. One-Sided Mode

- If the document contains two or more pages, the EDH detects the size of the first page only. The machine uses the same size data for the subsequent pages of the document.
- Since the machine needs to determine the paper source only once based on the size detected of the first page of the document and control panel settings, it can expedite paper take-up timing.

NOTE

Void and other image failures occur if a document that contains pages of different sizes is used in this mode. (But, that does not result in a misfeed.)

6-4. Two-Sided Mode

- The EDH automatically turns over the original to allow the machine to make copies of both sides of the original (in order of the first side and second side of the original).

6-5. Single Feed Mode

- This mode is used to copy a heavy original.
- When the user loads the original in the Single Feed Tray, the EDH automatically takes it up and feeds it in to let the machine makes a copy of it.

7. TAKE-UP SECTION

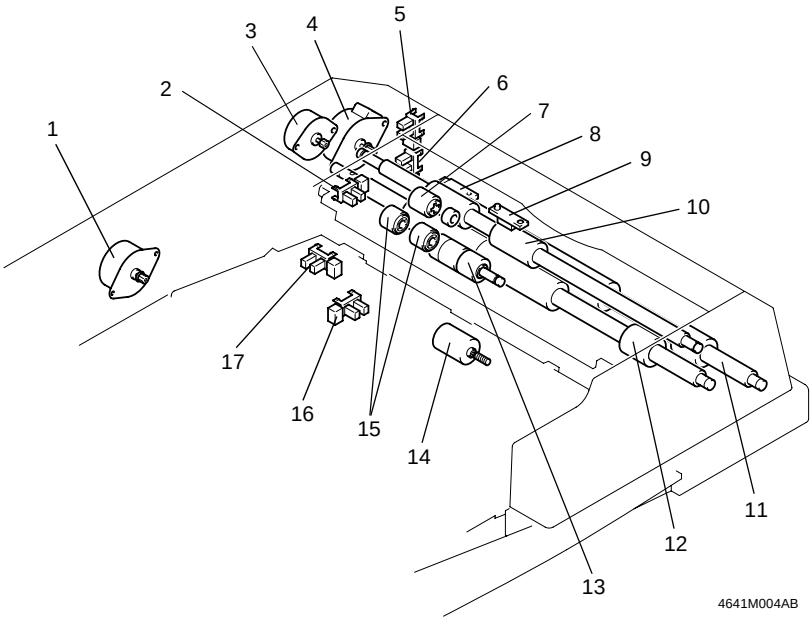

No.	Name	No.	Name
1	Transport Motor (M2)	10	Transport Roller
2	Pick-Up Raised Position Sensor (PC14)	11	Registration Roller 1
3	Take-Up Motor (M1)	12	Registration Roller 2
4	Reading Motor (M3)	13	Separator Roller
5	Manual Feed Open/Close Sensor (PC16)	14	Pick-Up Motor (M5)
6	Paper Take-Up Open/Close Sensor (PC17)	15	Take-Up Roller
7	Feed Roller	16	Empty Sensor (PC1)
8	Registration Sensor (PC2)	17	Pick-Up Lower Position Sensor (PC15)
9	Paper Separation Sensor (PC3)		

7-1. Document Handling Tray Raising/Lowering Mechanism

- The Document Handling Tray moves up to allow the document take-up mechanism to take up and feed the original.
- The Pick-Up Motor gives drive for raising and lowering the Document Handling Tray.

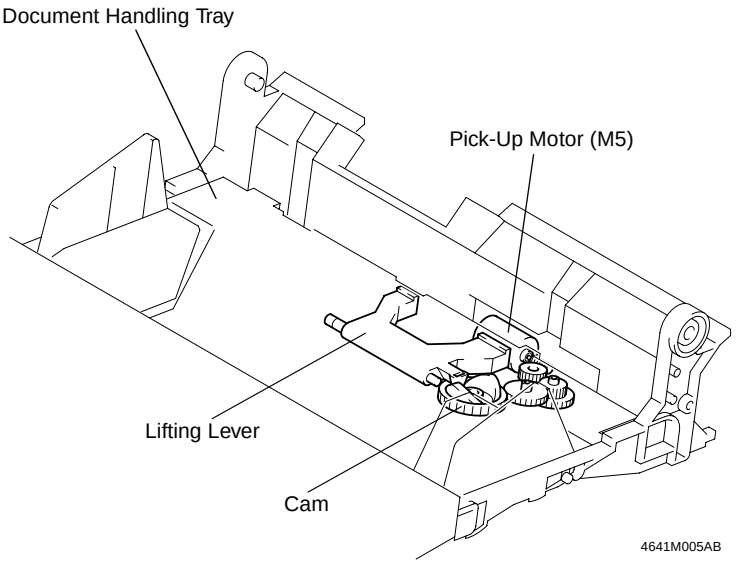

(1) Pick-Up Motor Control

- Signals output from PJ11A-1 and -2 on the Main Control Board control forward rotation (to raise the tray), backward rotation (to lower the tray), and deenergization of Pick-Up Motor.

M5	PJ11A-1	PJ11A-2
Forward Rotation	H	L
Backward Rotation	L	H
Brake	H	H
Stop	L	L

(2) Document Handling Tray Ascent/Descent Motion

1. Tray Ascent Motion

- The tray moves upward when any of the following conditions is met with a document loaded in position.

✻ The Start key is pressed.
✻ Any key on the control panel is pressed.
✻ Pick-Up Raised Position Sensor is blocked during a copy cycle.

- Drive from the Pick-Up Motor turns the Drive Cam through a gear train. The Lifting Lever moves along the profile of the Drive Cam, causing the tray to move up.
- The tray ascent motion is stopped when the Pick-Up Raised Position Sensor is unblocked.

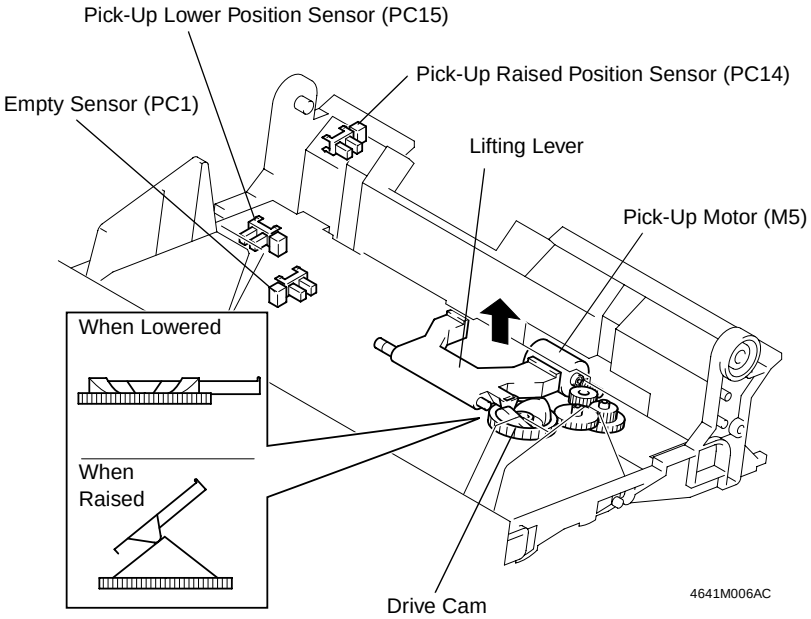

2. Tray Descent Motion

- When all pages of a document have been taken up and fed in and the Empty Sensor is unblocked, the Pick-Up Motor starts turning backward.
- Drive from the Pick-Up Motor turns the Drive Cam through a gear train. The tray lowers as the Lifting Lever moves along the profile of the Drive Cam.
- The tray ascent motion is stopped when the Pick-Up Lower Position Sensor is unblocked.

7-2. Document Take-Up and Feed Mechanism

- As the Take-Up Roller, Feed Roller, and Separator Roller turn, the original loaded in the Document Handling Tray is taken up and fed up to the Transport Roller.
- The Take-Up Motor gives drive for the Take-Up Roller, Feed Roller, and Separator Roller.

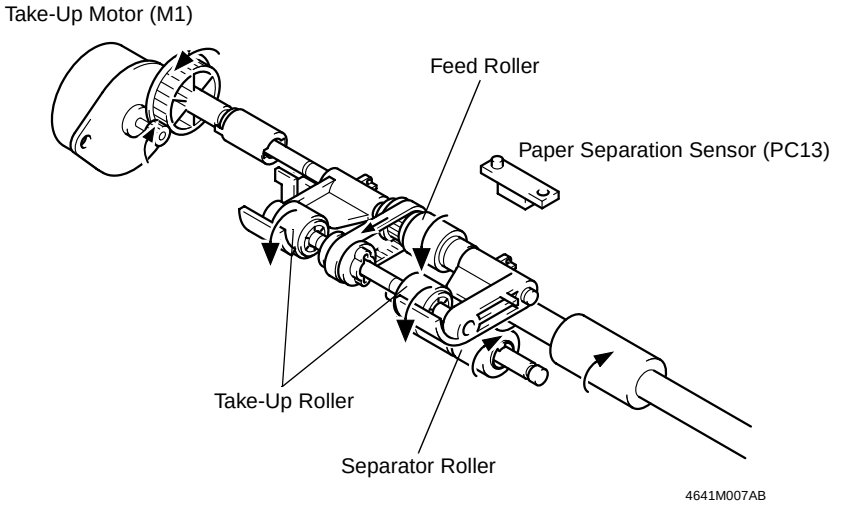

(1) Take-Up Motor Control

- Drive of the Take-Up Motor is controlled by applying pulse signals output from an IC of the Main Control Board to the three coils of the motor.

7-3. Single Feed Mechanism

- When the Single Feed Tray is opened and an original is placed on it, the Registration Sensor detects it. Registration Rollers 1 and 2 then start turning and the machine automatically starts a copy cycle.
- The Reading Motor gives drive to Registration Rollers 1 and 2.

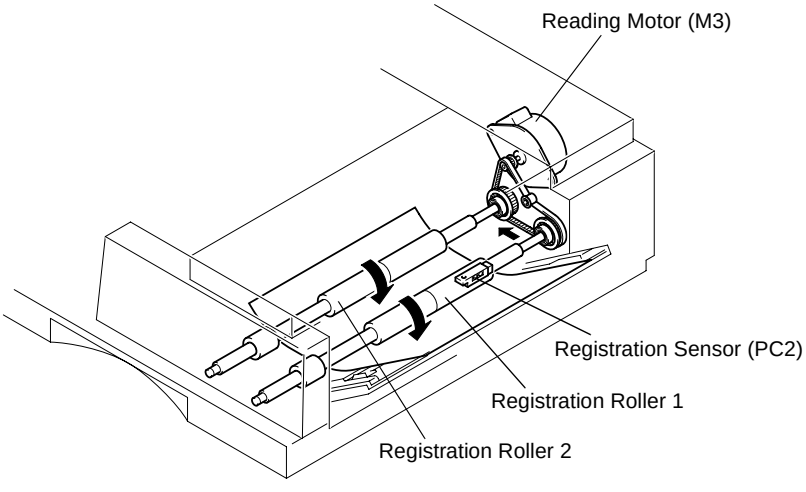

4641M008AB

8. TRANSPORT SECTION

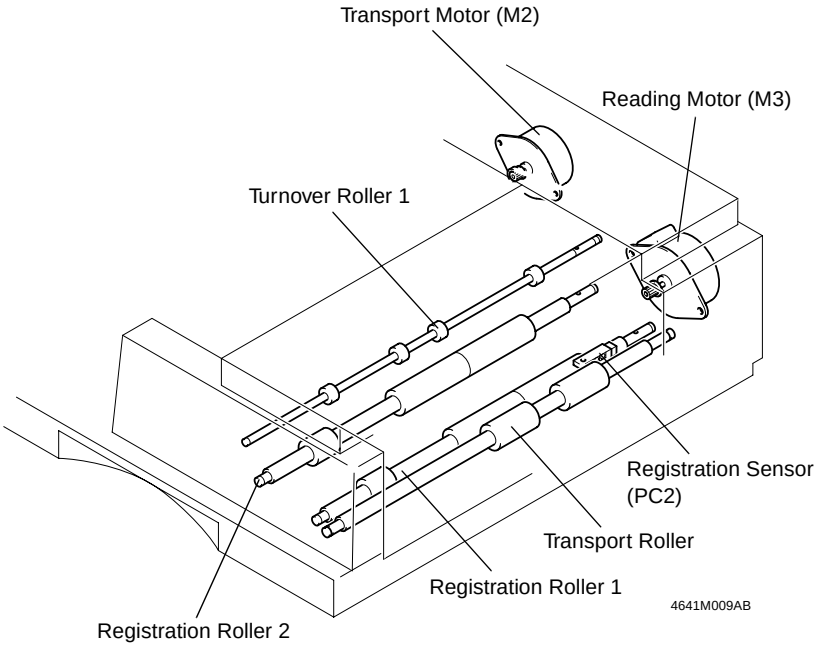

8-1. Document Transport Mechanism

- The Transport Roller, Registration Rollers 1 and 2, and Turnover Roller 1 turn together to transport the original fed from the take-up mechanism to the exit mechanism or turnover mechanism.
- The Transport Motor turns the Transport Roller and Turnover Roller 1.
- While, the Reading Motor turns Registration Rollers 1 and 2.

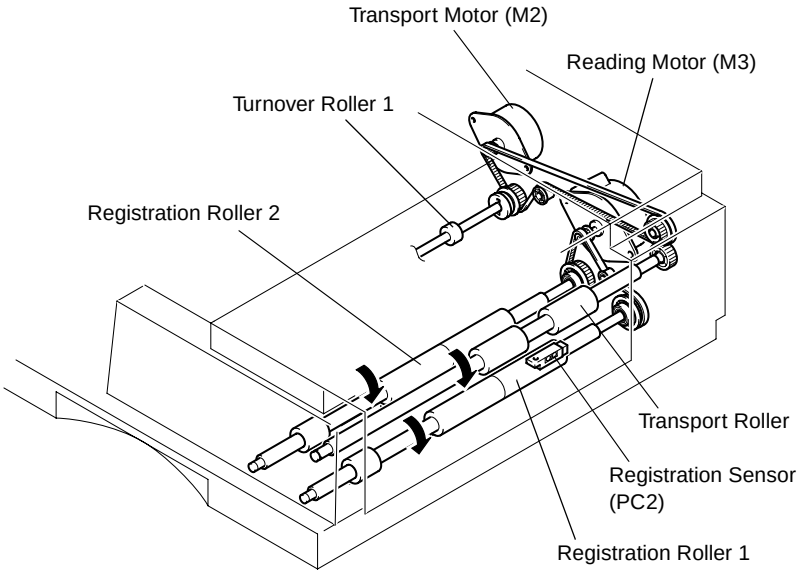

1. Transport Motor/Reading Motor Control

- The direction of rotation (either forward or backward) of the Transport Motor is controlled by changing the sequence of energizing three coils of the motor with the pulse signals output from an IC on the Main Control Board.
- Energization of the Reading Motor is controlled by applying pulse signals output from an IC on the Main Control Board to the three coils of the motor.

9. TURNOVER/EXIT MECHANISM

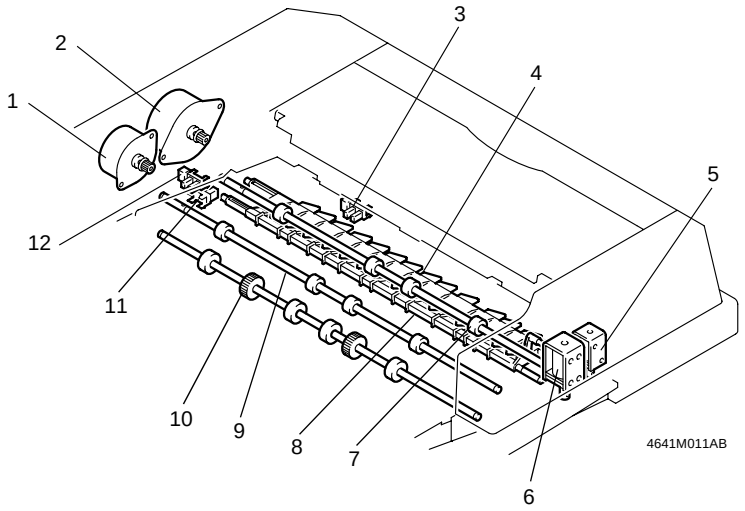

No.	Name	No.	Name
1	Exit Motor (M4)	7	Turnover Roller 1
2	Transport Motor (M2)	8	Exit Switching Plate
3	Duplex Turnover Sensor (PC4)	9	Turnover Roller 2
4	Turnover Switching Plate	10	Exit Roller
5	Duplex Turnover Solenoid (SL1)	11	Exit Turnover Sensor (PC5)
6	Exit Turnover Solenoid (SL2)	12	Exit Sensor (PC3)

9-1. Turnover/Exit Document Transport Mechanism

- The Exit Roller and Turnover Rollers 1 and 2 turn to either turn over the original transported from the transport mechanism or feed it out of the EDH.
- The Exit Motor drives the Exit Roller and Turnover Roller 2.
- The Transport Motor drives Turnover Roller 1.

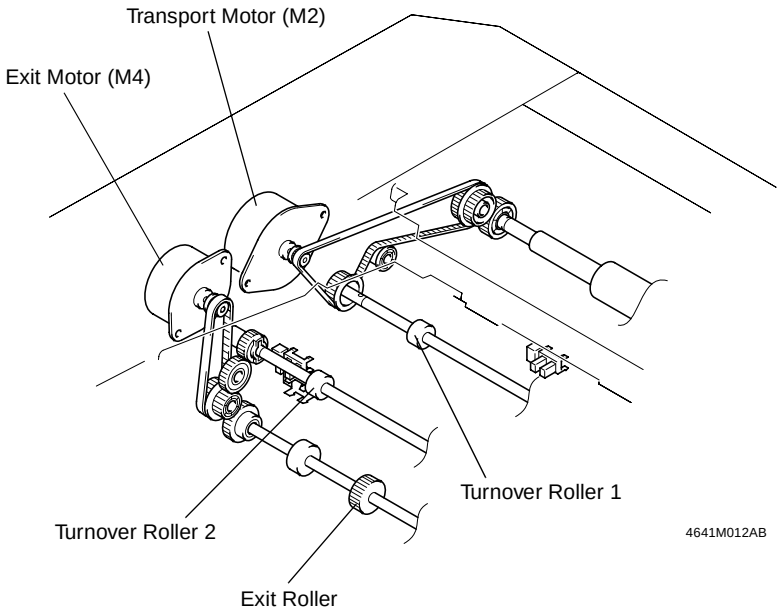

1. Exit Motor/Transport Motor Control

- The direction of rotation, either forward or backward, of the Transport Motor and Exit Motor is controlled by changing the sequence of energizing three coils of each motor with the pulse signals output from an IC on the Main Control Board.

9-2. Turnover/Exit Switching Mechanism

1. Turnover Mechanism

- The Turnover Switching Plate changes the original path so that the original is turned over.
- The Turnover Switching Plate is operated by energizing and deenergizing the Duplex Turnover Solenoid.

<One-Sided, Single Feed mode: Solenoid deenergized>

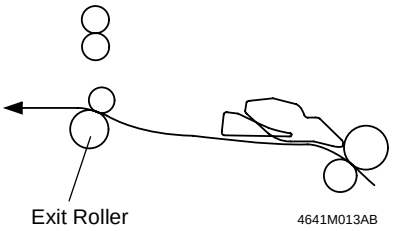

<Two-Sided, Mixed Size (AMS) (one-sided, two-sided) mode: Solenoid energized>

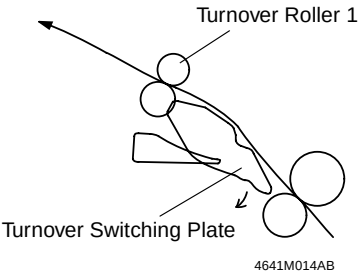

2. Duplex Turnover Solenoid Control

- The Duplex Turnover Solenoid is energized and deenergized by the output from PJ9A-2 on the Main Control Board.

Duplex Turnover Solenoid	PJ9A-2
Energized	L
Deenergized	H

3. Exit Mechanism

- The Exit Switching Plate changes the original path so that the original is fed out of the EDH.
- The Exit Switching Plate is operated by energizing and deenergizing the Exit Turnover Solenoid.

<One-Sided/Single Feed/Mixed Size (AMS) (One-Sided, Two-Sided): Solenoid deenergized>

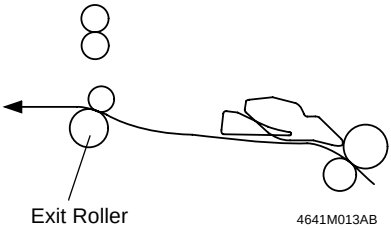

<Two-Sided: Solenoid energized>

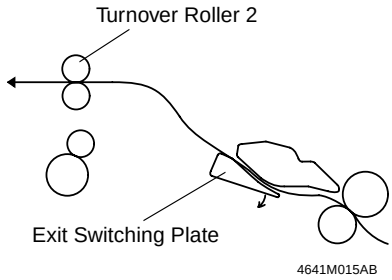

4. Exit Turnover Solenoid (SL2) Control

- The Exit Turnover Solenoid is energized and deenergized by the output from PJ9A-4 on the Main Control Board.

Exit Turnover Solenoid	PJ9A-4
Energized	L
Deenergized	H

9-3. Document Transport Path in Each of the EDH Operating Modes

- The EDH provides different paper paths through which the original is transported according to different EDH operating modes [One-Sided, Two-Sided, Mixed-Size (AMS), and Single Feed].

(1) One-Sided and Single Feed Mode

Duplex Turnover Solenoid	Exit Turnover Solenoid
Deenergized	Deenergized

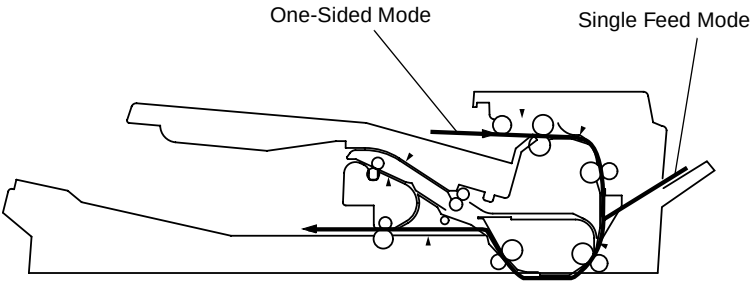

4641M016AB

(2) Two-Sided Mode

1. The Scanner reads the first side of the original.

Duplex Turnover Solenoid	Exit Turnover Solenoid
Energized	Deenergized

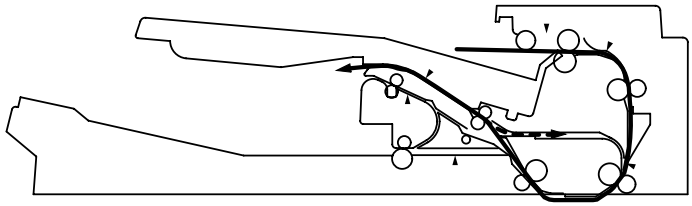

4641M017AB

2. The original is turned over again so that the Scanner can read the second side of the original.

Duplex Turnover Solenoid	Exit Turnover Solenoid
Deenergized	Energized

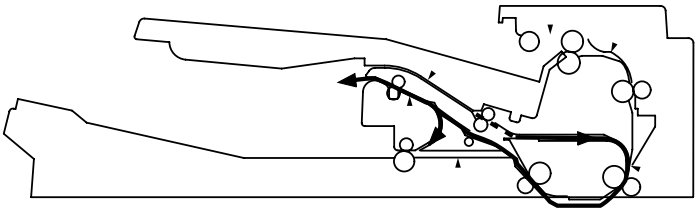

4641M018AB

3. If the original is fed out directly from condition 2, it is on the Exit Tray with its second side facing down. The original is therefore turned over a third time at the Exit Section so that it is on the Exit Tray with its first side facing down.

Duplex Turnover Solenoid	Exit Turnover Solenoid
Deenergized	Deenergized

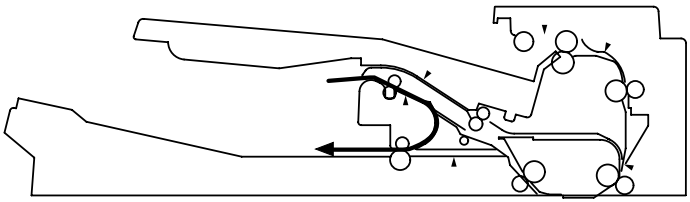

4641M019AB

(3) Mixed Size (AMS) Mode

1. The original is once fed through the EDH to allow the EDH to detect the length of the original.

• The Registration Sensor detects the length of the original.

Duplex Turnover Solenoid	Exit Turnover Solenoid
Energized	Deenergized

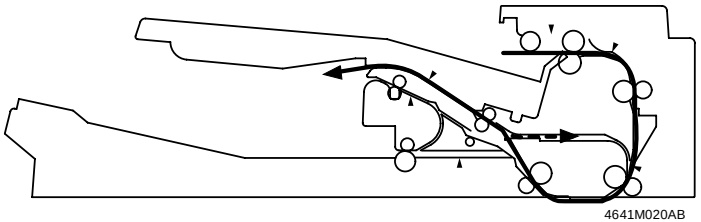

4641M020AB

2. Since the first and second sides of the original are inverted, the original is fed through the same path and turned over.

✻ In the Two-Sided mode, the Scanner reads the second side of the original while the original is being turned over.

Duplex Turnover Solenoid	Exit Turnover Solenoid
Energized	Deenergized

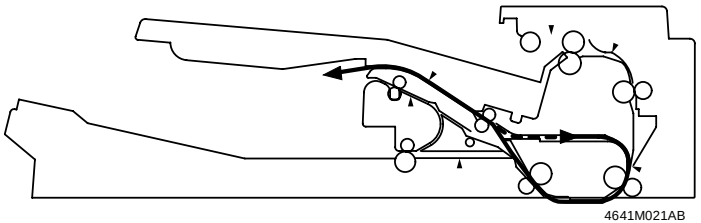

4641M021AB

3. The Scanner reads the first side of the original and the original is ejected directly into the Exit Tray.

Duplex Turnover Solenoid	Exit Turnover Solenoid
Deenergized	Deenergized

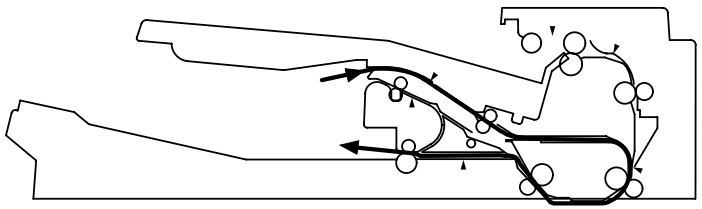

4641M022AB

10. OTHER FEATURES

10-1. Size Detection System

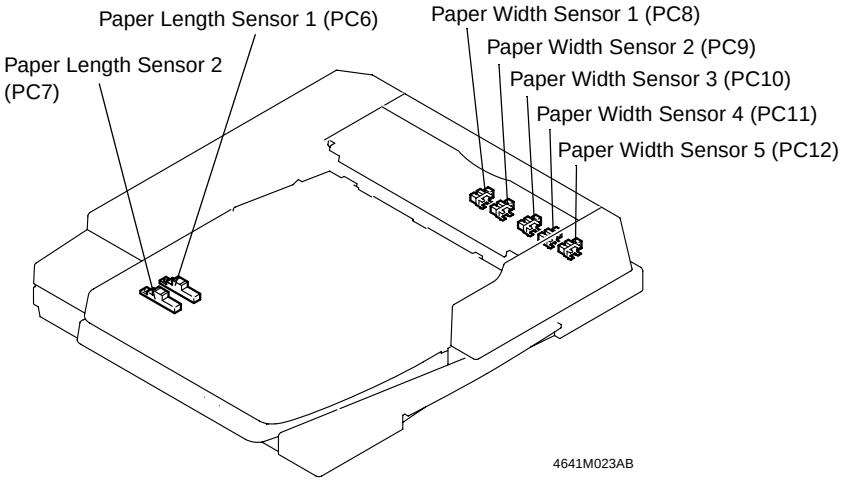

(Document Width Detection)
- Paper Width Sensors 1 to 5 detect the width of the original.
- These sensors are placed with reference to the Rear Document Guide Plate and activated and deactivated by an actuator.

(Document Length Detection)
- Paper Length Sensors 1 and 2 detect the length of the original.
- These sensors are a reflector type and placed at a respective given distance from the Take-Up Roller.

10-2. EDH Raised/Lowered Position Detection

- A Size Reset Switch that is actuated and deactuated by a magnet is used to detect that the EDH is raised or lowered.
- Raising and lowering the EDH resets a misfeed condition.

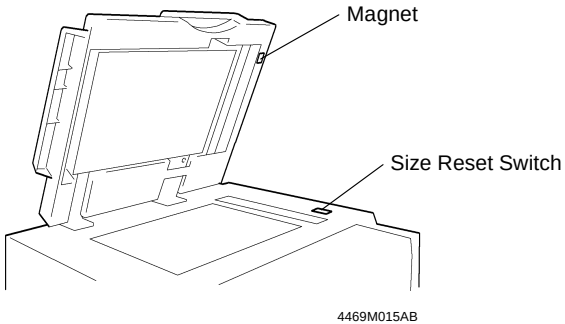

10-3. EDH Cooling System

- There is a Fan Motor installed that draws air from the outside into the inside of the EDH to prevent the temperatures of the drive motors and PWB from rising inordinately high.

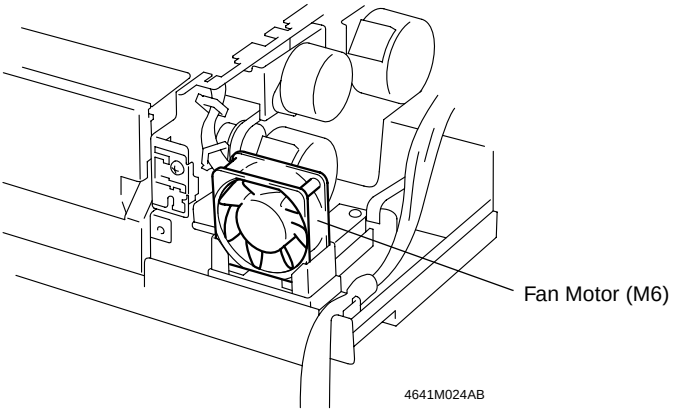

DIS/REASSEMBLY, ADJUSTMENT

1. MAINTENANCE SCHEDULE

- To ensure good copies and an extended service life of the EDH, it is recommended that the maintenance jobs described in this schedule be carried out.

No.	PM Parts	Maintenance Schedule		Part No.	Qty	Reference Page	PM Counter	Possible Malfunction
		Cleaning	Replacement					
1	Take-Up Roller	30K	—	—	2	☞ D-3	EDH Simplex + EDH Duplex × 0.5	Take-up failure, multiple feed, dirty original
2	Feed Roller	30K	120K	4469-3504-01	1	☞ D-3		
3	Separator Roller	30K	120K	4641-0153-01	1	☞ D-3		
4	Transport Roller	30K	—	—	1	☞ M-3		Dirty image, transport failure
5	Transport Roll	30K	—	—	5	☞ M-3		
6	Registration Roller 1	30K	—	—	1	☞ D-4	EDH Simplex + EDH Duplex + EDH Single Feed	Inaccurate stop position, transport failure
7	Registration Roll	30K	—	—	6	☞ D-4		
8	Registration Roller 2	30K	—	—	1	☞ D-5		Transport failure
9	Registration Roll	30K	—	—	6	☞ D-5		
10	Turnover Roller 1	30K	—	—	1	☞ M-3	EDH Duplex × 0.5	
11	Turnover Roll	30K	—	—	4	☞ M-3		
12	Turnover Roller 2	30K	—	—	1	☞ M-3		
13	Turnover Roll	30K	—	—	4	☞ M-3		
14	Exit Roller	30K	—	—	1	☞ M-3	EDH Simplex + EDH Duplex × 0.5 + EDH Single Feed	
15	Exit Roll	30K	—	—	4	☞ M-3		
16	Read Guide	Upon call	—	—	1	☞ M-2	—	Dirty image, transport failure
17	Registration Sensor	120K	—	—	1	☞ D-4	EDH Simplex + EDH Duplex + EDH Single Feed	Erroneous misfeed detection, erroneous size detection
18	Paper Separation Sensor, Paper Length Sensors 1 and 2	120K	—	—	3	☞ M-3 ☞ M-5	EDH Simplex + EDH Duplex × 0.5	

- (Unit: K = 1,000 copies)

✻ Calculate the value of the PM Counter to perform the service job.
E.g.: Exit Roller = EDH Simplex + EDH Duplex x 0.5 + EDH Single Feed = 30K

✻ Replace the Feed Roller and Separator Roller at the same time.

✻ Wipe rollers and rolls clean with a soft cloth dampened with alcohol.

✻ Clean the sensor with a blower brush.

This information is subject to change without notice.

2. DISASSEMBLY

2-1. Removal of Covers

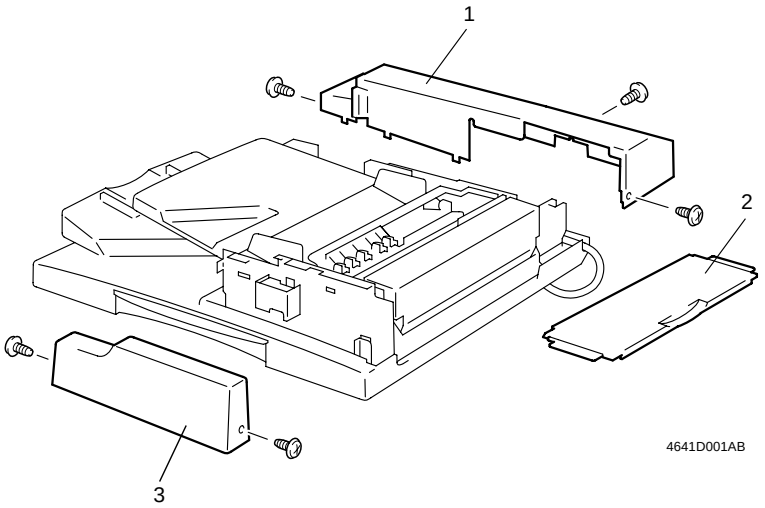

1. Rear Cover: Remove three screws and take off the cover.
2. Top Cover: First remove the Front and Rear Covers and then lift the cover up.
3. Front Cover: Remove two screws and take off the cover.

2-2. Removal of the Take-Up Roller, Feed Roller, and Separator Roller

(1) Take-Up Roller and Feed Roller

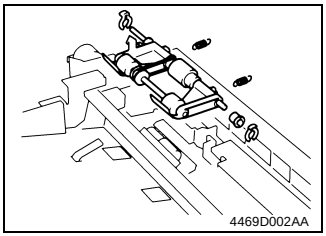

1. Remove the Front, Rear, and Top Covers.
2. Remove the two C-clips and the bushing (at the front).
3. Unhook the two springs and remove the Take-Up Roller Assy.

NOTE
Use care not to drop the springs when removing the Take-Up Roller Assy.

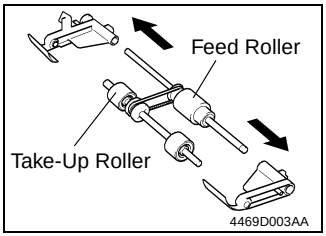

4. Remove the Take-Up Roller and Feed Roller from the Take-Up Roller Assy.

(2) Separator Roller

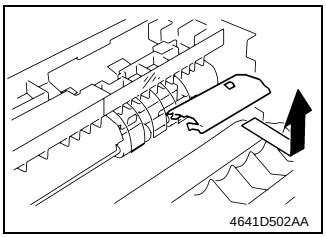

1. Open the Misfeed Clearing Guide Plate.
2. Remove the cover.

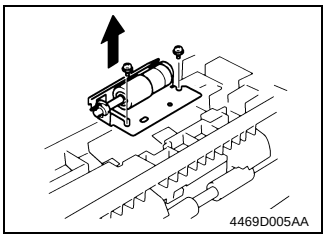

3. Loosen the two screws and remove the Separator Roller Assy.

2-3. Cleaning of the Registration Sensor

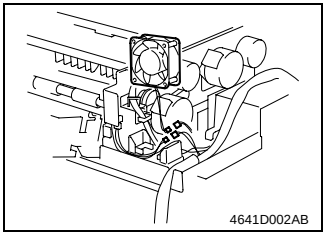

1. Remove the Front, Rear, and Top Covers.
2. Unplug the connector and remove the Fan Motor.
3. Disconnect the Registration Sensor relay harness connector.

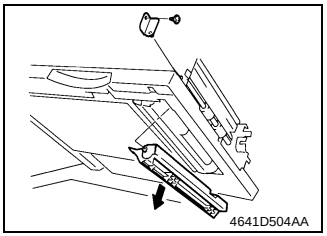

4. Remove one screw and the Upstream Read Guide Assy.

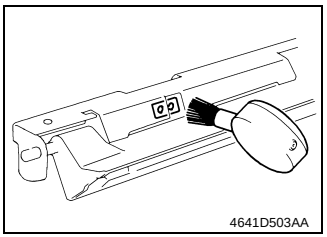

5. Clean the sensing surface of the Registration Sensor with a blower brush.

2-4. Cleaning of the Registration Roller 1/Rolls

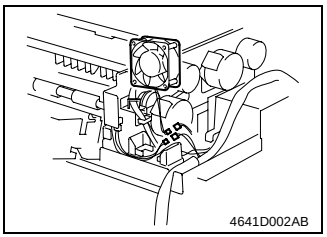

1. Remove the Front, Rear, and Top Covers.
2. Unplug the connector and remove the Fan Motor.
3. Disconnect the Registration Sensor relay harness connector.

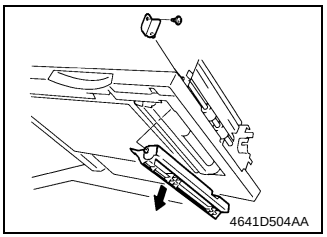

4. Remove one screw and the Upstream Read Guide Assy.

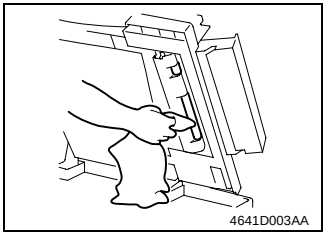

5. Wipe the surfaces of Registration Roller 1 and Rolls clean with a soft cloth dampened with alcohol.

2-5. Cleaning of the Registration Roller 2/Rolls

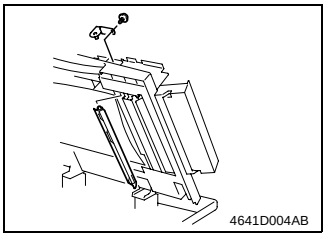

1. Remove the Front Cover.
2. Remove one screw and the Downstream Read Guide Assy.

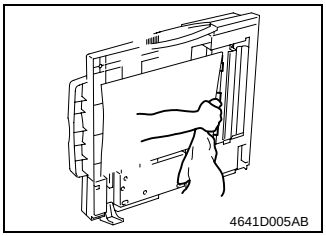

3. Wipe the surfaces of Registration Roller 2 and Rolls clean with a soft cloth dampened with alcohol.

2-6. Removal of the Pick-Up Motor Assy

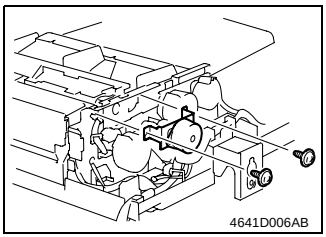

1. Remove the Front, Rear, and Top Covers.
2. Remove the two screws and the Take-Up Motor Assy.

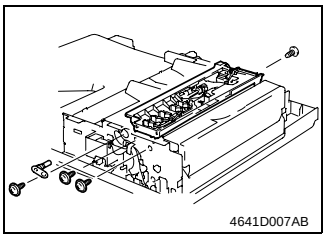

3. Remove the four screws and the Take-Up Assy.

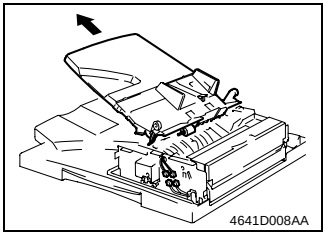

4. Unplug two connectors.
5. Remove the Document Handling Tray Assy.

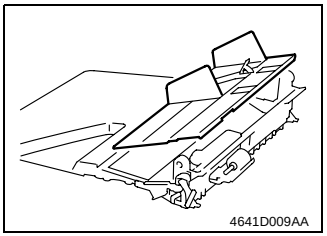

6. Remove the Document Lifting Plate from the Document Handling Tray Assy.

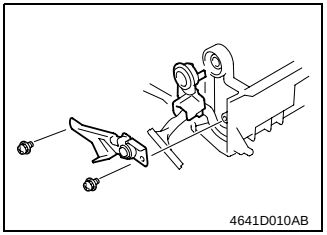

7. Remove the two screws and the Lever Assy.
8. Remove the harness guide.

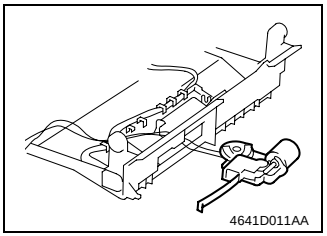

9. Remove the Pick-Up Motor Assy.

2-7. Belt Mounting Positions

NOTE

- *Secure the belt tensioning brackets in position when the tension rolls are stationary by the tension of the springs.*

1	Transport Motor Drive Belt
2	Exit Motor Drive Belt
3	Reading Motor Drive Belt

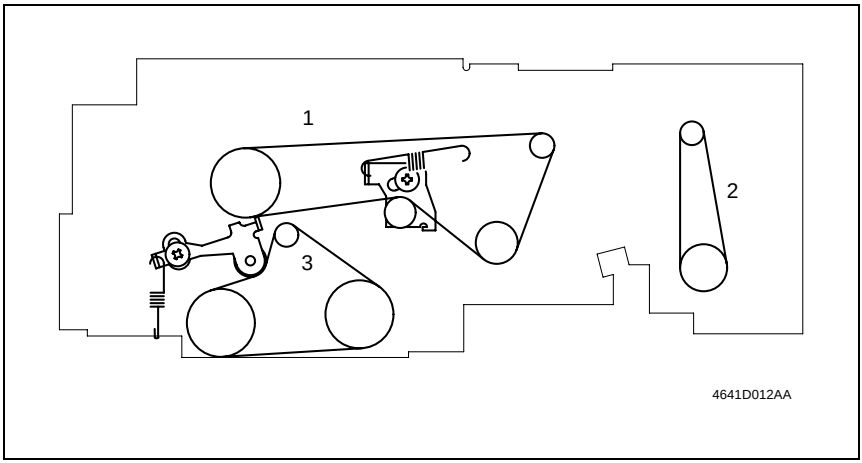

3. ADJUSTMENT

3-1. Check and Adjustment Items Involved with Cleaning and Replacement of Parts

Adjustment Type		I.R. & EDH Check					Adjust
Item		Function (EDH)					EDH
		Position/ Zoom (FD)	Position (CD)	S-ADF Mode (CD)	S-ADF Mode (FD)	Skew feed	Registration loop amount
Parts List		Chart	Chart	Chart	Chart	Chart	Normally “0”
Take-Up Roller	Upon replacement	①	②	③	④	—	—
Feed Roller	Upon replacement	①	②	③	④	—	—
Separator Roller	Upon replacement	①	②	③	④	—	—
Transport/ Registration Roller 1 and Rolls	Upon replacement	①	②	③	④	—	—
Read Guide	Upon replacement	①	②	③	④	—	—
Original type	(When thick/ thin paper is used)	—	—	—	—	—	Setting change
EDH	When remounted to machine	②	③	④	⑤	①	—

3-2. Adjustment of the stroke of Duplex Turnover Solenoid and Exit Turnover Solenoid

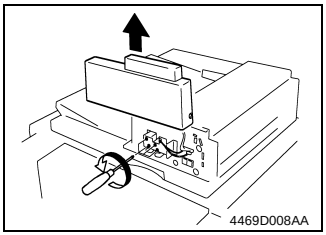

1. Remove the Front Cover.
2. Loosen the two screws each that secure the solenoid in position.

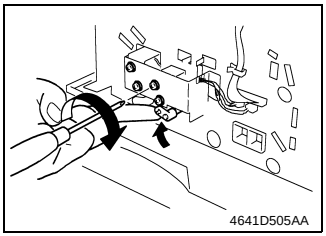

3. With the solenoid switching lever pressed against the solenoid, tighten the screws.

3-3. Skew Adjustment

(Requirements: Deviation of image on both edges: 0 ±3 mm)

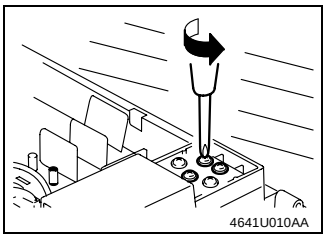

1. Remove the Rear Cover.
2. Loosen the three screws for adjusting skew and move the EDH to the front or rear as necessary. See the following for the adjustment procedures.

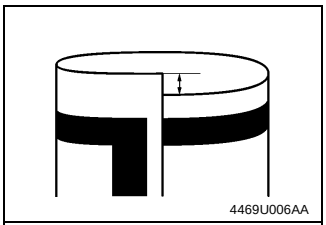

- If the image on the copy deviates as shown on the left, push the front left side of the EDH toward the rear.

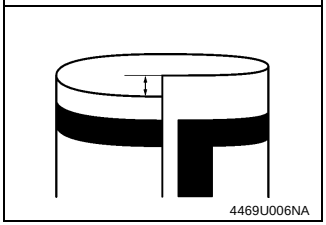

- If the image on the copy deviates as shown, push the front right side of the EDH toward the rear.

3-4. Types of “Function (EDH)” Adjustments

• An automatic adjustment can be made with the test chart fed through the EDH.

Function (EDH)	Test Chart Adjustment Position	Test Chart
Position/Zoom (FD)	Part A (zoom ratio), Part B (read position)	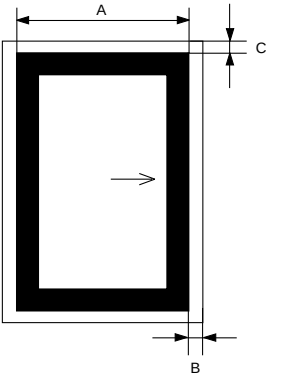 4469S043AA
Position (CD)	Part C	
S-ADF Mode (CD)	Part C	
S-ADF Mode (FD)	Part B	
Skew Check	Part B (skew checked with width at front and width in rear)	

NOTE

- *Check the followings if the message “Unable/NG” appears on the Touch Panel even after several sequences of automatic adjustments in each mode.*

1. *Direction in which the test chart is placed*
2. *Dirt and wrinkles in the test chart*
3. *Tilt in installation site*

- *Use the Adjust mode to adjust manually.*

3-5. Function (EDH) Adjustments

(1) Position/Zoom (FD)

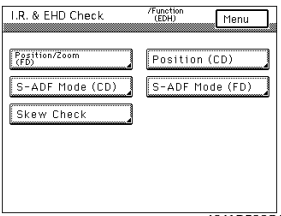

4641D506CA

1. Select Tech. Rep. Mode → I.R. & EDH Check → Function (EDH) → Position/Zoom (FD).

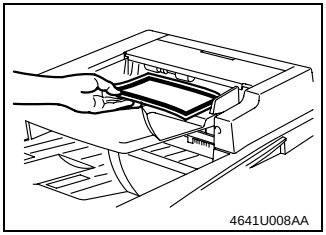

4641U008AA

2. Load the chart in the Document Handling Tray.
3. Press the Start key. This starts an automatic adjustment sequence.

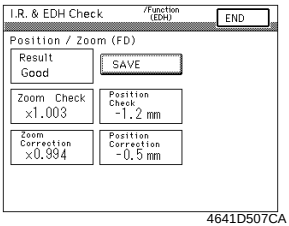

4641D507CA

4. When Result is “Good,” touch [SAVE] to store the adjustment value in memory.

• If the Result is “Unable/NG,” repeat steps 2 and 3.

5. Touch [END].

(2) Position (CD)

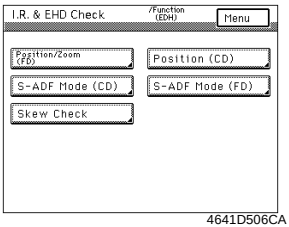

4641D506CA

1. Select Tech. Rep. Mode → I.R. & EDH Check → Function (EDH) → Position (CD).

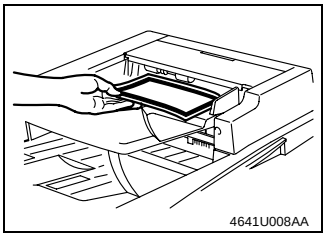

4641U008AA

2. Load the chart in the Document Handling Tray.
3. Press the Start key. This starts an automatic adjustment sequence.

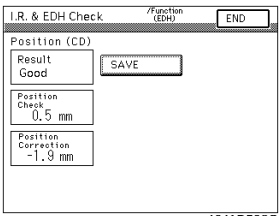

4641D508CA

4. When Result is “Good,” touch [SAVE] to store the adjustment value in memory.

• If the Result is “Unable/NG,” repeat steps 2 and 3.

5. Touch [END].

(3) S-ADF Mode (CD)

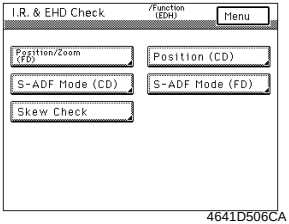

4641D506CA

1. Select Tech. Rep. Mode → I.R. & EDH Check → Function (EDH) → S-ADF Mode (CD).

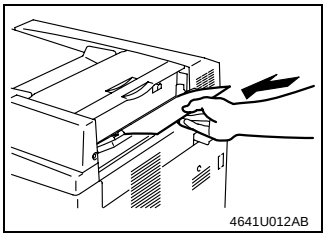
4641U012AB

2. Insert the chart into the Single Feed Tray.
3. This starts an automatic adjustment sequence.

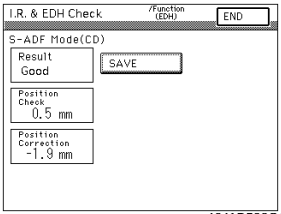

4641D509CA

4. When Result is “Good,” touch [SAVE] to store the adjustment value in memory.
5. If the Result is “Unable/NG,” repeat steps 2 and 3.
6. Touch [END].

(4) S-ADF Mode (FD)

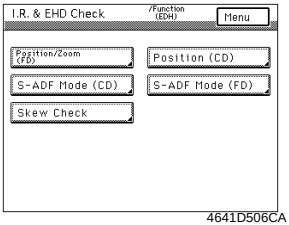

4641D506CA

1. Select Tech. Rep. Mode → I.R. & EDH Check → Function (EDH) → S-ADF Mode (FD).

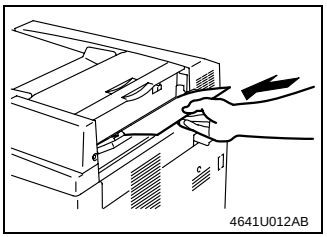
4641U012AB

2. Insert the chart into the Single Feed Tray.
3. This starts an automatic adjustment sequence.

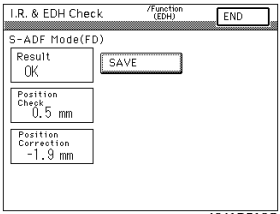

4641D510CA

4. When Result is “OK,” touch [SAVE] to store the adjustment value in memory.
5. If the Result is “Unable/NG,” repeat steps 2 and 3.
6. Touch [END].

(5) Skew Check

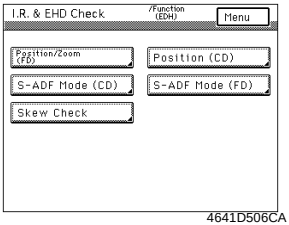

4641D506CA

1. Select Tech. Rep. Mode → I.R. & EDH Check → Function (EDH) → Skew Check.

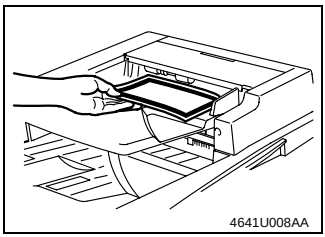
4641U008AA

2. Load the chart in the Document Handling Tray.
3. Press the Start key. This starts an automatic check sequence for skew.

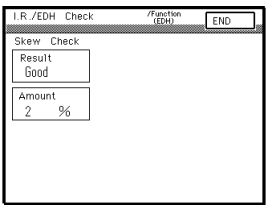

4469S029CB

4. After the check sequence has been completed, the Touch Panel shows the check result and the amount of skew.
5. Touch [END].

3-6. Adjust Mode

- The Adjust mode is used when fine-adjustments are necessary of the adjustment values stored using Function (EDH).

Adjust Mode	Description
Zoom (FD) EDH	Fine-adjusts the zoom ratio in the FD direction.
Feed (2)	Fine-adjusts the reading position of the backside of the original when Two-Sided Mode is selected.
Feed (FD)	Fine-adjusts the value stored in “Position (FD).”
Feed (CD)	Fine-adjusts the value stored in “Position (CD).”
S-ADF Feed (FD)	Fine-adjusts the value stored in “S-ADF Mode (FD).”
S-ADF Feed (CD)	Fine-adjusts the value stored in “S-ADF Mode (CD).”
Regist. Loop (1)	Fine-adjusts the amount of loop in the original (first side) at the Registration Roller.
Regist. Loop (2)	Fine-adjusts the amount of loop in the original (second side) at the Registration Roller.
Feed Position	Sets the position at which the Scanner is to be stopped for reading the original.

NOTE

- *The fine-adjusted values should be entered on the Adjust Label affixed to the inside of the Front Door.*

- Adjustment Procedure
  E.g.: S-ADF Feed (FD)

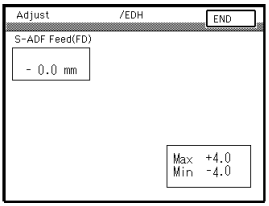

4469S038CB

1. Select Adjust → EDH → S-ADF Feed (FD).
2. Press the Clear key and, from the 10-Key Pad, enter the correction value. (Use the Access Mode key to enter a + or -.)
3. Touch [END].

TROUBLESHOOTING

1. I/O CHECK

- A check is made of the sensor input data while the machine remains in the standby state (including a misfeed, malfunction, and a closure failure condition), to determine whether a correct signal is being input.

<Procedure>
1. Select Tech. Rep. Mode → I.R. & EDH Check → I/O Check (EDH).
2. Using a sheet of paper, activate the sensor and check the display on the Touch Panel. (Paper present: 1: paper not present: 0)

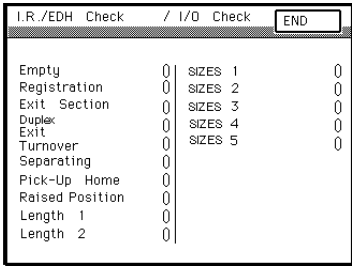

4641T501CA

2. EDH PAPER PASSAGE CHECK

- Paper passage is checked for each operating mode.

<Procedure>
1. Select Tech. Rep. Mode → I.R. & EDH Check → EDH Paper Passage.

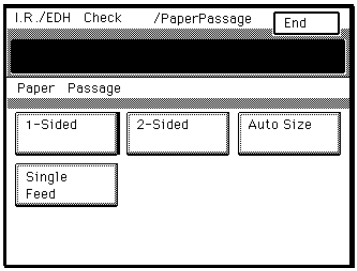

4641T502CA

2. Select the operating mode in which to check for paper passage.
3. Load a document in the Document Handling Tray or insert an original in the Single Feed Tray.
4. Press the Start key. This starts the paper passage sequence which continues until all pages of the document are fed through the EDH. (For the Single Feed Tray, the original is automatically taken up and fed in as it is inserted into the tray.)

NOTE
- *If the Stop key is pressed while the paper passage sequence is carried out, the EDH ejects all pages of the document out of it, terminating the sequence.*

3. MISFEED DETECTION

- When a misfeed or malfunction is detected in the EDH, the Touch Panel of the machine gives the following display.

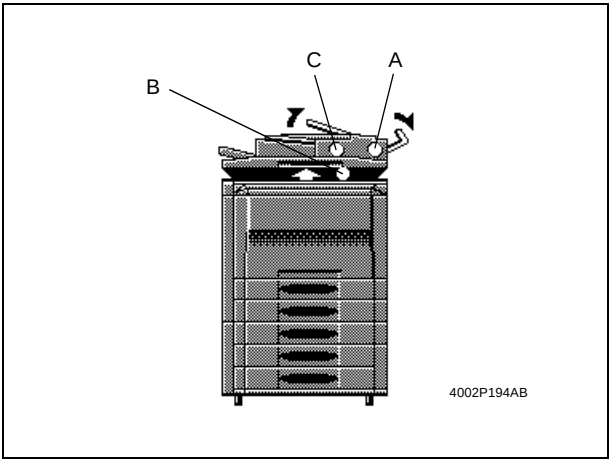

3-1. Types of Misfeed Detection and Detection Timing

- The following lists the types of misfeed detection and detection timings for different misfeed locations within the EDH.
- The symbol “L” (for the leading edge) and “T” (for the trailing edge) given in ( ) indicate the particular edge of the original page detected by the sensor.

Touch Panel Display	Misfeed Location	Description	Detection Start	Detection Timing
A	Take-up section	Original not reaching Registration Sensor	When Take-Up Motor is energized	Registration Sensor (L)
B	Transport section	Original stagnant at Paper Separation Sensor	When Reading Motor is energized	Paper Separation Sensor (T)
		Original stagnant at Registration Sensor	When Reading Motor is energized	Registration Sensor (T)
C	Turnover section (in Two-Sided mode)	Original not reaching Duplex Turnover Sensor	When Reading Motor is energized	Duplex Turnover Sensor (L)
		Original (for 2nd side) not reaching Registration Sensor	When Transport Motor is energized (to start turning backward)	Registration Sensor (L)
		Original stagnant at Duplex Turnover Sensor	When Reading Motor is energized (to start transporting for 2nd side)	Duplex Turnover Sensor (L)
	Turnover section (during ejection)	Original not reaching Exit Turnover Sensor	When Reading Motor is energized	Exit Turnover Sensor (L)
		Original stagnant at Exit Turnover Sensor	When Exit Motor is energized (to start turning forward)	Exit Turnover Sensor (L)
	Exit section	Original not reaching Exit Sensor	When Reading Motor is energized	Exit Sensor (L)
		Original stagnant at Exit Sensor	When Reading Motor is energized	Exit Sensor (T)

4. MISFEED CLEARING PROCEDURES

(1) Misfeed at the take-up section

- Original is not taken up.

Step	Check	Result	Action
1	Original meets specifications for reliable feeding.	NO	Instruct user.
2	Document exceeds the tray capacity.	YES	Instruct user.
3	Take-Up Roller, Feed Roller, and/or Separator Roller are deformed, worn, or dirty with paper dust.	YES	Clean or change.
4	Take-Up Motor rotation	NO	Correct drive mechanism. Change motor. Change Main Control Board.
5	Paper Separation Sensor operation: "Separating" of I/O port screen changes from 0 to 1 when the sensor is blocked.	YES	Change Main Control Board.
		NO	Clean sensor. Change sensor.

(2) Misfeed at the transport section

- Original is at a stop near the Registration Roller.

Step	Check	Result	Action
1	Original meets specifications for reliable feeding.	NO	Instruct user.
2	Transport Roller is deformed, worn, or dirty.	YES	Clean or change.
3	Registration Rollers 1 and 2 are deformed, worn, or dirty.	YES	Clean or change.
4	Belt mounting	NO	Mount.
5	Transport Motor rotation	NO	Correct drive mechanism. Change motor. Change Main Control Board.
6	Reading Motor rotation	NO	Correct drive mechanism. Change motor. Change Main Control Board.
7	Registration Sensor operation: "Registration" of I/O port screen changes from 0 to 1 when the sensor is blocked.	YES	Change Main Control Board.
		NO	Clean sensor. Change sensor.

(3) Misfeed at turnover section (in Two-Sided mode)

• Original is at a stop near the turnover section.

Step	Check	Result	Action
1	Original meets specifications for reliable feeding.	NO	Instruct user.
2	Turnover Roller 1 is deformed, worn, or dirty.	YES	Clean or change.
3	Belt mounting	NO	Mount.
4	Transport Motor rotation	NO	Correct drive mechanism. Change motor. Change Main Control Board.
5	Duplex Turnover Sensor operation: "Duplex Exit" of I/O port screen changes from 0 to 1 when the sensor is unblocked.	YES	Change Main Control Board.
		NO	Change sensor.
6	Duplex Turnover Solenoid operation: The voltage across PJ9A-2 of Main Control Board and GND is DC24V when the solenoid is deenergized and DC0V when the solenoid is energized during original transport in Two-Sided mode.	YES	Change solenoid.
		NO	Change Main Control Board.

(4) Misfeed at turnover section (during ejection) and exit section

• Original is at a stop near the Exit Roller.

Step	Check	Result	Action
1	Original meets specifications for reliable feeding.	NO	Instruct user.
2	The Exit Roller and/or Turnover Roller 2 are deformed, worn, or dirty.	YES	Clean or change.
3	Belt mounting	NO	Mount.
4	Exit Motor rotation	NO	Correct drive mechanism. Change motor. Change Main Control Board.
5	Exit Sensor operation: "Exit Section" of I/O port screen changes from 0 to 1 when the sensor is unblocked.	YES	Change Main Control Board.
		NO	Change sensor.
6	Exit Turnover Sensor operation: "Turnover" of I/O port screen changes from 0 to 1 when the sensor is unblocked.	YES	Change Main Control Board.
		NO	Change sensor.
7	Exit Turnover Solenoid operation: The voltage across PJ9A-4 of Main Control Board and GND is DC24V when the solenoid is deenergized and DC0V when the solenoid is energized during original transport in Two-Sided mode.	YES	Change solenoid.
		NO	Change Main Control Board.

5. MALFUNCTION DETECTION

Malfunction Code	Description	Detection Timing
C0044	Fan Motor malfunction	A HIGH Lock signal that extends 100 ms or more is detected 1.5 s after the Fan Motor has started turning.
C143E	Pick-Up Motor malfunction	When the Document Handling Tray goes up: The Pick-Up Raised Position Sensor is not unblocked even after the lapse of 1 s after the Pick-Up Motor has started turning forward.
		When the Document Handling Tray goes down: The Pick-Up Lower Position Sensor is not unblocked even after the lapse of 1 s after the Pick-Up Motor has started turning backward.

6. MALFUNCTION TROUBLESHOOTING PROCEDURES

(1) C0044: Fan Motor malfunction

Step	Check	Result	Action
1	Fan Motor operation: The voltage across PJ12A-1 of Main Control Board and GND is DC0V when the motor is deenergized and DC24V when the motor is energized after the malfunction has been reset.	NO	Change Main Control Board.
2	The voltage across PJ12A-3 of Main Control Board and GND is DC5V when the motor is deenergized and 0V when the motor is energized after the malfunction has been reset.	YES	Change motor.
		NO	Change Main Control Board.

(2) C143E: Pick-Up Motor malfunction

• During ascent motion

Step	Check	Result	Action
1	Foreign matter on Pick-Up Motor gear	YES	Remove foreign matter.
2	Pick-Up Motor operation: The voltage across PJ11A-1 of Main Control Board and GND is DC0V when the motor is deenergized and DC24V when the motor is energized when the Document Handling Tray is raised after the malfunction has been reset.	YES	Change motor.
		NO	Change Main Control Board.
3	Pick-Up Raised Position Sensor operation: "Raised Position" of I/O port screen changes from 1 to 0 when the sensor is unblocked.	YES	Change Main Control Board.
		NO	Change sensor.

• During descent motion

Step	Check	Result	Action
1	Foreign matter on Pick-Up Motor gear	YES	Remove foreign matter.
2	Pick-Up Motor operation: The voltage across PJ11A-2 of Main Control Board and GND is DC0V when the motor is deenergized and DC24V when the motor is energized when the Document Handling Tray is lowered after the malfunction has been reset.	YES	Change motor.
		NO	Change Main Control Board.
3	Pick-Up Lower Position Sensor operation: "Pick-Up Home" of I/O port screen changes from 0 to 1 when the sensor is blocked.	YES	Change Main Control Board.
		NO	Change sensor.

PF-115

SERVICE MANUAL

10794

CONTENTS

GENERAL, MECHANICAL/ELECTRICAL

1. SPECIFICATIONS M-1
2. COMPONENT IDENTIFICATION M-1
3. CROSS-SECTIONAL VIEW M-2
4. DRIVE SYSTEM COMPONENT LAYOUT M-2
5. ELECTRICAL PARTS LAYOUT M-3
6. VERTICAL TRANSPORT SECTION M-4
   - 6-1. Vertical Transport Drive Mechanism M-4
   - 6-2. Vertical Transport Motor Control M-4
7. PAPER TAKE-UP/FEEDING SECTION M-5
   - 7-1. Drawer Paper Take-Up Mechanism M-5
     - (1) Drawer Paper Take-Up Mechanism M-5
     - (2) Paper Separating Mechanism M-5
     - (3) Paper Pressure Releasing Mechanism M-6
   - 7-2. Paper Take-Up Control M-7
     - (1) Paper Take-Up Motor Control M-7
     - (2) Paper Take-Up Retry Control M-7
     - (3) Paper Take-Up Interval Control M-7
     - (4) Double Feed Paper Take-Up Control M-8
   - 7-3. Shift Tray and Main Tray M-8
   - 7-4. Main Tray Paper Lift-up Mechanism M-9
     - (1) Main Tray Paper Raising/Lowering Operation M-9
     - (2) Paper Top Level Correction M-10
   - 7-5. Main Tray Paper Lift-Up Control M-11
     - (1) Elevator Motor Control M-11
     - (2) Elevator Motor Energization Timing (Main Tray Up/Down Timing) .. M-12
     - (3) Elevator Motor Deenergization Timing (Main Tray Stop Timing) M-12
   - 7-6. Shift Gate Drive Mechanism M-13
     - (1) Shift Gate Drive Operation M-13
     - (2) Shift Gate Motor Control M-13
   - 7-7. Shifter Drive Mechanism M-14
   - 7-8. Shifter Drive Control M-15
     - (1) Shift Motor Control M-15
     - (2) Shift Motor is Energized When: M-15
     - (3) Shift Motor is Deenergized When: M-15
   - 7-9. Paper Empty Detection M-17
   - 7-10.Paper Level Detection M-18
   - 7-11.Drawer Lock/Release Mechanism M-19
   - 7-12.Paper Dehumidifying Heater (Option) M-20

DIS/REASSEMBLY, ADJUSTMENT

1. DISASSEMBLY D-1
   - 1-1. Maintenance Schedule D-1
   - 1-2. Removal of Exterior Parts D-2
   - 1-3. Removal of 3rd Drawer D-3
   - 1-4. Remove of Wire Drive Pulley D-3

1-5. Remove of Guide Plate and Cover D-6
1-6. Remove of Separator Roll Assy D-6
1-7. Removal of Paper Take-Up Roll/Feed Roll Assy D-7
1-8. Cleaning of Separator Roll and Paper Take-Up Roll/Feed Roll D-8
1-9. Cleaning of Vertical Transport Rollers D-8
2. ADJUSTMENT D-9
2-1. Adjustment of 3rd Drawer Reference Position D-9
2-2. Adjustment of Shifter Transport Timing Belt D-12

MISFEED DETECTION

1. MISFEED DETECTION T-1
1-1. Location of Misfeed Detecting Sensors T-1
1-2. Misfeed Detection Types and Detection Timings T-1
2. TYPES OF MALFUNCTION DETECTION AND DETECTION TIMING T-2

GENERAL, MECHANICAL/ELECTRICAL

NOTE
A description of the Duplex Unit (Turnover Unit and Horizontal Transport Section) is contained in PF-7D Service Manual.

1. SPECIFICATIONS

Type	:	Tandem-paper-loading 2,500-sheet Cassette
Type of Copy Paper	:	Standard and recycled paper
Paper Sizes	:	A4C or 11 × 8-1/2C
Paper Weight	:	60 to 90 g/m^2
Capacity	:	2,500 sheets (when 80 g/m^2 paper is used) 2,600 sheets (when 20 lbs. paper is used)
Paper Stack Moving	:	By Shifter Main Tray moving up/down
Power Source	:	24 VDC, 5 VDC (supplied from copier)
Dimensions	:	Width 664 mm or 26-1/4 in Depth 730 mm or 28-3/4 in Height 388 mm or 15-1/4 in
Weight	:	47.6 kg or 105 lbs.

2. COMPONENT IDENTIFICATION

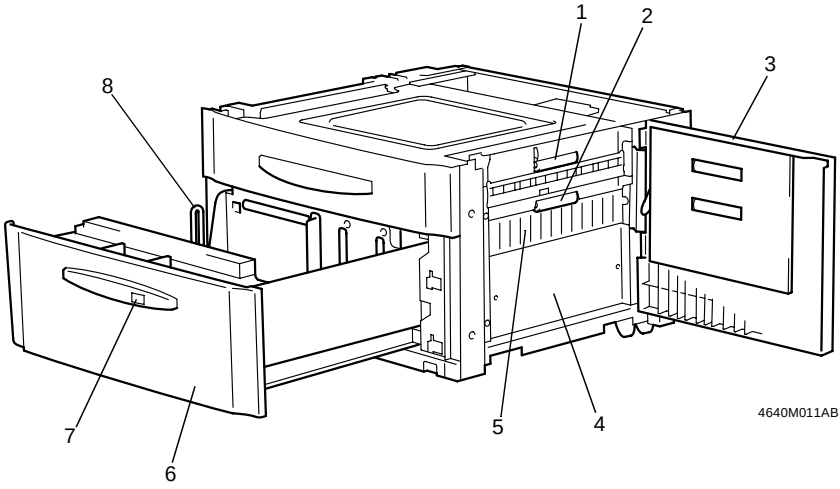

1. Vertical Transport Roller 2 (Drive)
2. Vertical Transport Roller 1 (Drive)
3. Lower Right Door
4. Cover Plate
5. Separator Roll/Paper Guide Plate
6. 3rd Drawer
7. Paper Descent Key
8. Shifter

3. CROSS-SECTIONAL VIEW

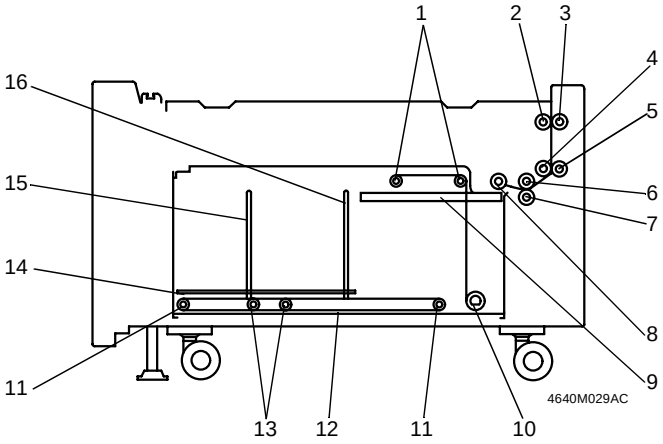

1. Pulley
2. Vertical Transport Roller 2 (Drive)
3. Vertical Transport Roller 2 (Driven)
4. Vertical Transport Roller 1 (Drive)
5. Vertical Transport Roller 1 (Driven)
6. 3rd Drawer Feed Roll
7. 3rd Drawer Separator Roll
8. 3rd Drawer Take-Up Roll
9. Main Tray (3rd Drawer)
10. Wire Take-Up Pulley
11. Pulley
12. Shifter Transport Timing Belt
13. Shifter Transport Roller
14. Shift Tray
15. Shifter
16. Shift Gate

4. DRIVE SYSTEM COMPONENT LAYOUT

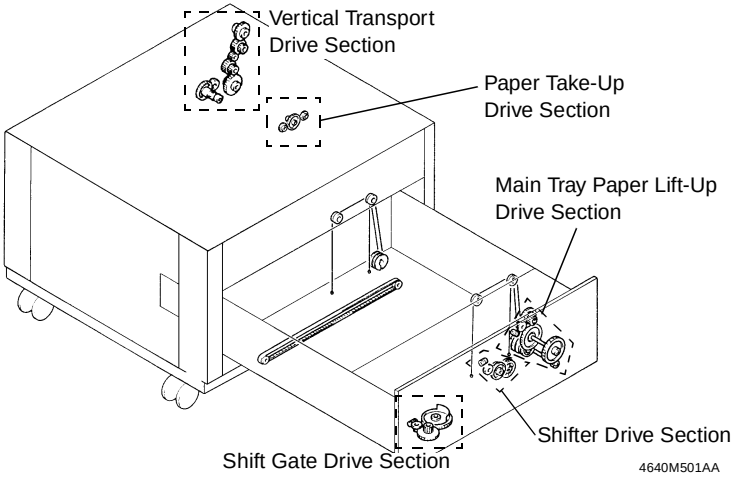

5. ELECTRICAL PARTS LAYOUT

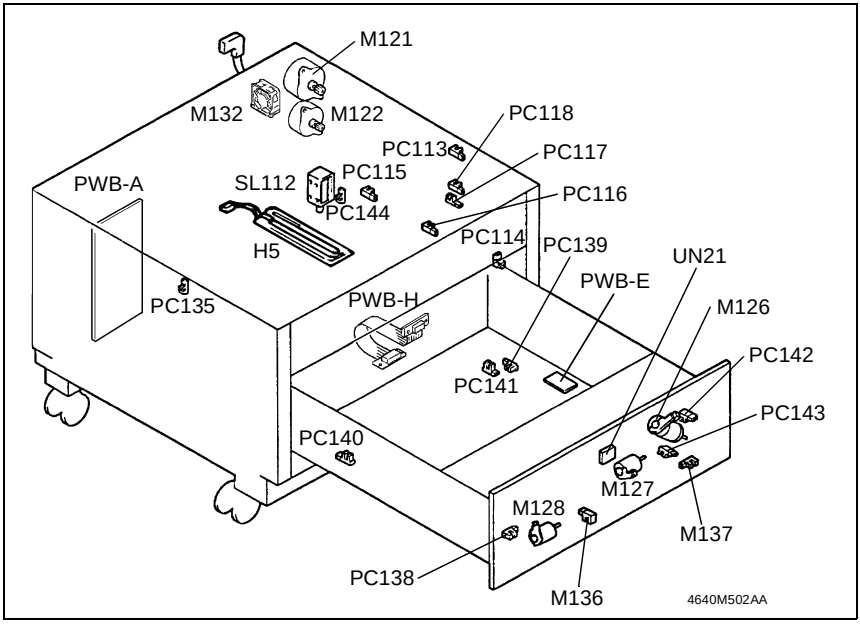

Symbol	Name	Symbol	Name
H5	Paper Dehumidifying Heater (Option)	PC136	Shift Gate Position Sensor
M121	Vertical Transport Motor	PC137	Lower Position Overrun Detecting Sensor
M122	3rd Drawer Paper Take-Up Motor	PC138	Shift Tray Paper Empty Sensor
M126	Elevator Motor	PC139	Elevator Lower Position Sensor
M127	Shift Motor	PC140	Shifter Home Position Sensor
M128	Shift Gate Motor	PC141	Shifter Return Position Sensor
M132	Vertical Transport Cooling Fan Motor	PC142	Elevator Motor Pulse Sensor
		PC143	Shift Motor Pulse Sensor
PC113	Paper Leading Edge Sensor 3	PC144	3rd Drawer Set Sensor
PC114	Lower Right Door Sensor	PWB-A	Control Board
PC115	3rd Drawer Paper Lift-Up Sensor	PWB-E	Elevator Tray Paper Empty Board
PC116	3rd Drawer Paper Empty Sensor	PWB-H	Cabinet Transport Board
PC117	3rd Drawer Paper Take-Up Sensor	SL112	3rd Drawer Lock Solenoid
PC118	Paper Leading Edge Sensor 4	UN21	Paper Descent Key
PC135	Toner Collecting Bottle Set Sensor		

6. VERTICAL TRANSPORT SECTION

6-1. Vertical Transport Drive Mechanism

A motor drives the Vertical Transport Rollers.

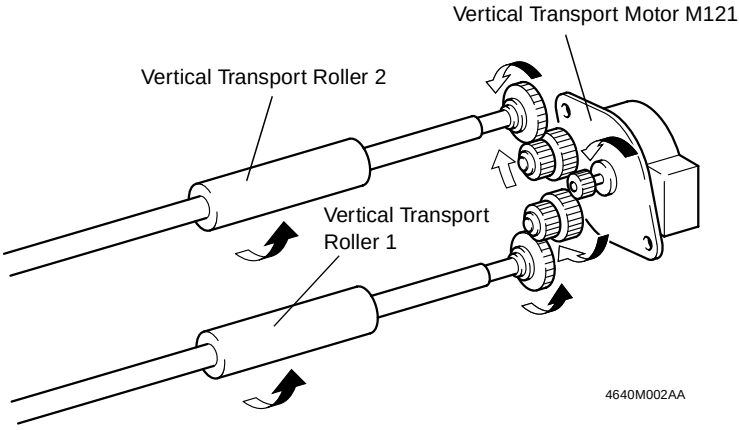

6-2. Vertical Transport Motor Control

The Vertical Transport Motor is controlled by the signal output from the Control Board.

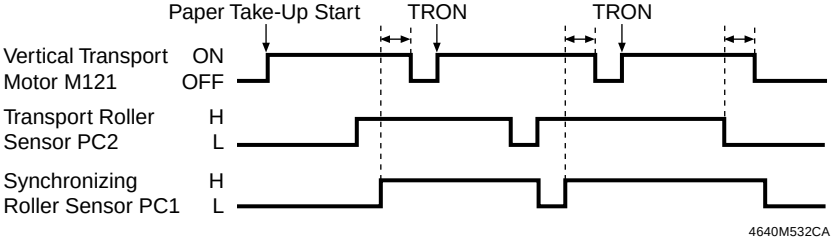

7. PAPER TAKE-UP/FEEDING SECTION

7-1. Drawer Paper Take-Up Mechanism

(1) Drawer Paper Take-Up Mechanism

Drive for the paper take-up sequence comes from a motor.

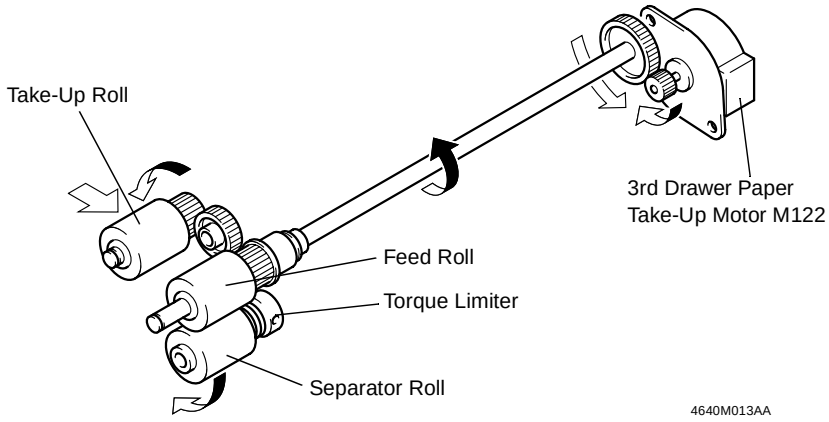

(2) Paper Separating Mechanism

The difference in friction coefficient between the Feed Roll and Separator Roll is used to stop the rotation of the Separator Roll for the prevention of double feed.

Normal feeding:

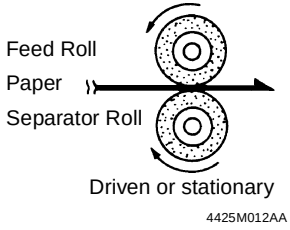

- When only one sheet of paper is taken up, the friction coefficient on the top side of the paper is equal to that on the underside. The Separator Roll is driven by the Feed Roll, which results in the paper being fed on.

Double feeding:

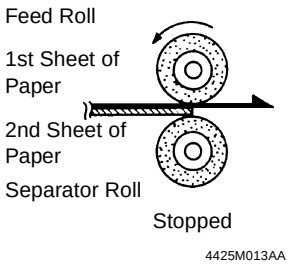

- Since the friction coefficient between the second sheet of paper and the Separator Roll is greater than that between the first and second sheets of paper, the Separator Roll remains stationary, allowing the Feed Roll to feed only the first sheet of paper

(3) Paper Pressure Releasing Mechanism

When the Paper Descent key is pressed, the main tray is lowered and the 3rd Drawer is pushed forward. Then the pressure release rail pushes down the Separator Roll Assy, disengaging the Separator Roll from the Feed Roll.

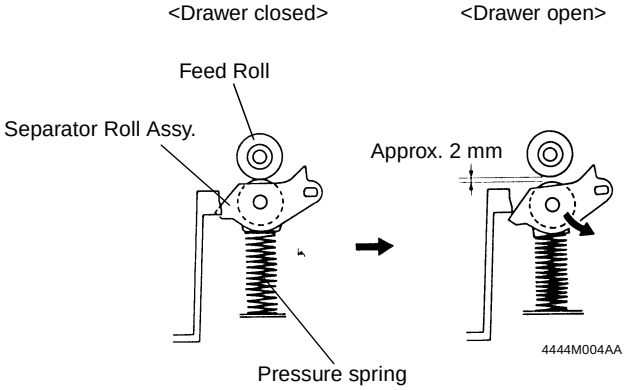

7-2. Paper Take-Up Control

(1) Paper Take-Up Motor Control

The Paper Take-Up Motor is controlled by the signal output from the Control Board.

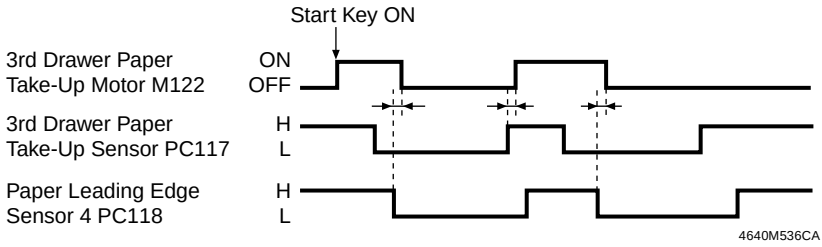

(2) Paper Take-Up Retry Control

To minimize the occurrence of a paper misfeed, the paper take-up sequence is temporarily halted if the paper fails to reach the Paper Take-Up Detecting Sensor within a given period of time after the sequence has been started. The paper take-up sequence is then performed again. These paper take-up sequences are repeated a given number of times.

Paper Take-Up Retry	No. of Paper Take-Up Retry Sequences
	Three times

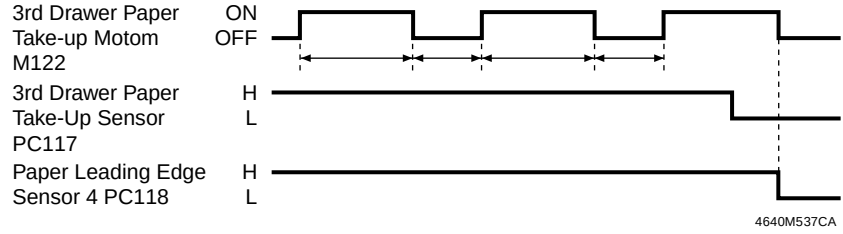

(3) Paper Take-Up Interval Control

To minimize the occurrence of a paper misfeed due to improper paper separation, the paper take-up sequence is temporarily halted if the paper fails to reach the Paper Take-Up Detecting Sensor within a given period of time after the sequence has been started. After another given period of time, the paper take-up sequence is performed a second time, thereby ensuring a good interval between two paper take-up sequences.

(4) Double Feed Paper Take-Up Control

If a sheet of paper has reached the Paper Take-Up Sensor when the trailing edge of a preceding sheet of paper moves past the Paper Take-Up Sensor, feeding of the second sheet of paper starts only after the trailing edge of the first sheet of paper moves past Paper Leading Edge Sensor SW2. This reduces the number of misfeeds that would otherwise be caused by double feeding.

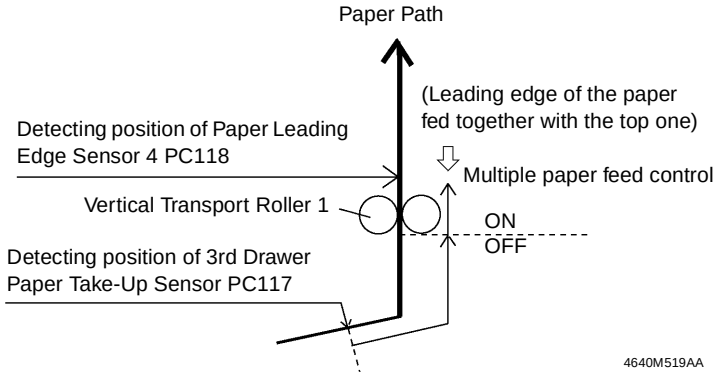

7-3. Shift Tray and Main Tray

- The Shift Tray and Main Tray used in this cassette are designed to hold paper of a fixed size (A4C or 8-1/2 × 11C).

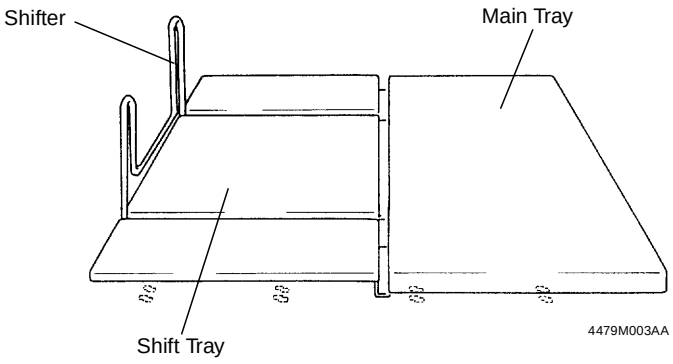

7-4. Main Tray Paper Lift-up Mechanism

(1) Main Tray Paper Raising/Lowering Operation

- The Main Tray is raised and lowered by turning the Elevator Motor forward and backward.
- The 3rd Drawer Lift-Up Sensor detects the Main Tray at its upper limit position.
- The Main Tray is detected at its lower limit position by the Lower Position Overrun Detecting Sensor and Elevator Lower Position Sensor.

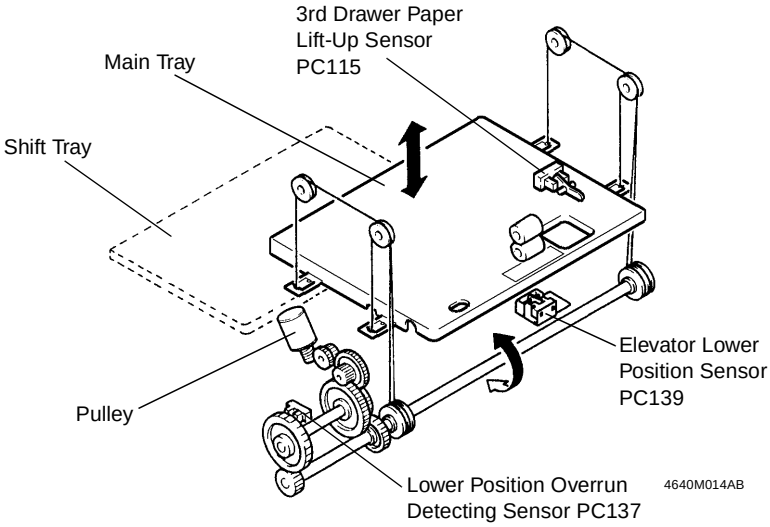

(2) Paper Top Level Correction

When LCC is slid in

3rd Drawer Paper Lift-Up Sensor PC115

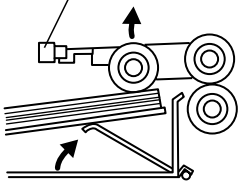

4640M522AB

The Elevator Motor is energized.

↓

The Main Tray goes up.

↓

The sensor is blocked.

↓

The Elevator Motor is deenergized.

During a copy cycle

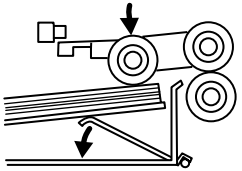

4640M523AB

Paper is consumed.

↓

The Paper Take-Up Roll lowers.

↓

The sensor is unblocked.

↓

The Elevator Motor is energized.

↓

The Main Tray goes up.

↓

The sensor is blocked.

↓

The Elevator Motor is deenergized.

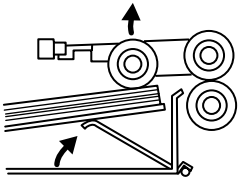

4640M522AB

(When a paper-empty condition is detected)

↓

The Main Tray lowers.

↓

The sensor is blocked.

↓

The Elevator Motor is deenergized.

7-5. Main Tray Paper Lift-Up Control

(1) Elevator Motor Control

The Elevator Motor is controlled by the signal output from the Control Board.

Elevator Motor	Main Tray	IC4A	
		Pin 8	Pin 4
Energized (backward rotation)	Up	L	H
Energized (forward rotation)	Down	H	L
Deenergized	Stop	L	L

Ascent

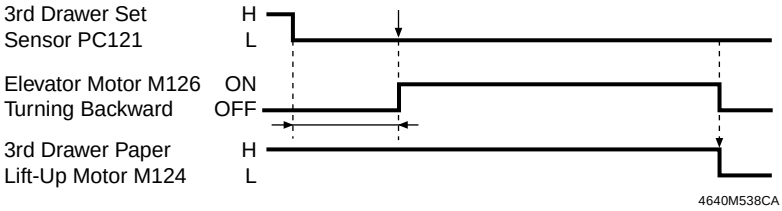

4640M538CA

Descent

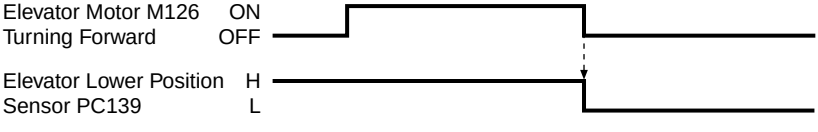

4640M539CA

(2) Elevator Motor Energization Timing (Main Tray Up/Down Timing)

- The Main Tray is Raised When:
  1. The 3rd Drawer is slid into position (the 3rd Drawer Set Sensor is blocked), with paper loaded on the Main Tray (the reflector-type photosensor mounted on the Elevator Tray Paper Empty Board is blocked).
  2. The paper stack on the Shift Tray is relocated to the Main Tray (the reflector-type photosensor mounted on the Elevator Tray Paper Empty Board is blocked).
  3. 3rd Drawer Paper Lift-Up Sensor is unblocked during a paper take-up sequence (top level correction).

- The Main Tray is Lowered When:
  1. A paper-empty condition is detected of the Main Tray (the 3rd Drawer Paper Empty Sensor is unblocked).
  2. The Paper Descent key is pressed.
  3. The Main Tray is between the upper and lower limit positions when the Power Switch is turned ON.

(3) Elevator Motor Deenergization Timing (Main Tray Stop Timing)

- While the Main Tray is going up:
  1. The 3rd Drawer Paper Lift-Up Sensor is blocked.
  2. The 3rd Drawer Paper Lift-Up Sensor is blocked during top level correction.

- While the Main Tray is going down: The Elevator Lower Position Sensor as part of the drive system is blocked.

7-6. Shift Gate Drive Mechanism

(1) Shift Gate Drive Operation

- The Shift Gate serves as a wall to block the paper on the Shift Tray from moving toward the Main Tray.
- The Shift Gate is retracted when the paper stack on the Shift Tray needs to be moved onto the Main Tray.
- The drive from the LCC Shift Gate Motor turns the cam to move the Shift Gate to the front or rear.
- The LCC Shift Gate Position Sensor detects the Shift Gate at its home position.

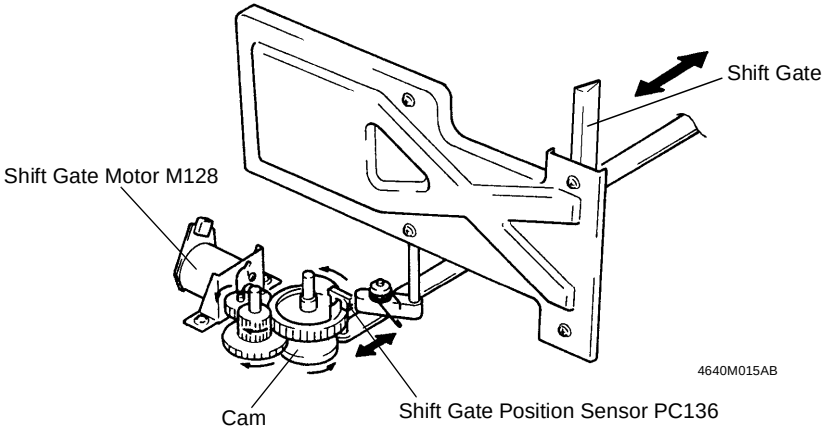

(2) Shift Gate Motor Control

The Shift Gate Motor is controlled by the signal output from the Control Board.

M128	OFF	ON
Pin 8 of IC5A	L	H

		PC136
Shift Gate	Advanced	Blocked Unblocked
	Retracted	Unblocked Blocked

7-7. Shifter Drive Mechanism

- When the Main Tray runs out of paper, the Shifter moves the paper stack on the Shift Tray to the Main Tray.

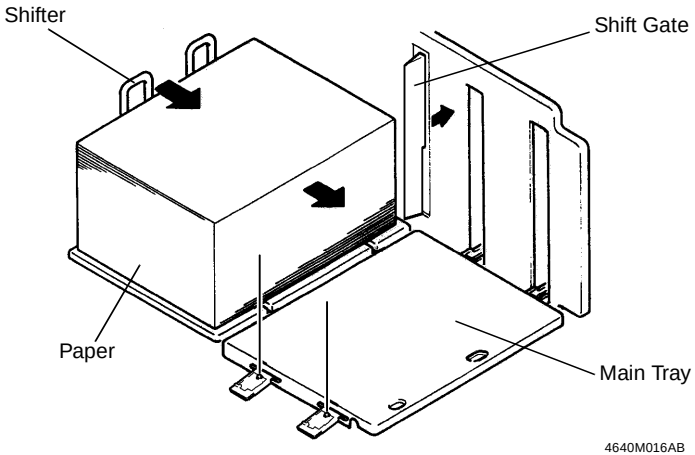

- The Shifter is driven by turning the LCC Shift Motor forward or backward.
- The LCC Shifter Home Position Sensor detects the Shifter at its home position.
- The LCC Shifter Return Position Sensor detects the Shifter at its return position.

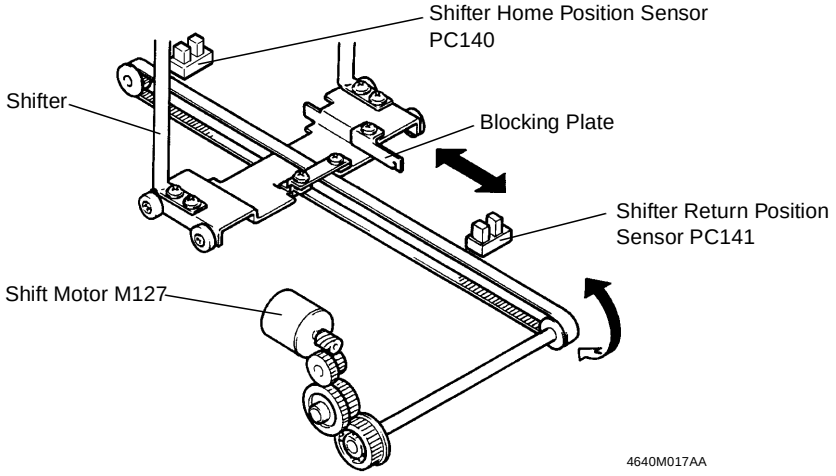

7-8. Shifter Drive Control

(1) Shift Motor Control

The Shift Motor is controlled by the signal output from the Control Board.

Shift Motor	Shift Tray	IC3A	
		Pin 8	Pin 4
Energized (backward rotation)	Transfer	L	H
Energized (forward rotation)	Return	H	L
Deenergized	Stop	L	L

(2) Shift Motor is Energized When:

- Shifter is to be moved: The Main Tray has no paper and the Shift Tray has a paper stack (the reflector-type photosensor mounted on the Elevator Tray Paper Empty Board is unblocked, Shift Tray Paper Empty Sensor is blocked, and Elevator Lower Position Sensor is blocked).
- Shifter is to be returned: The Shifter is not at its home position when power is turned ON.

(3) Shift Motor is Deenergized When:

- Shifter is to be stopped:
  1. During a paper transfer sequence, the LOW-going Shifter Home Position Sensor blocking pulse signal is counted N times (8-1/2 × 11C: N=1; A4C: N=2).
  2. During a return motion, the Shifter Home Position Sensor is blocked.

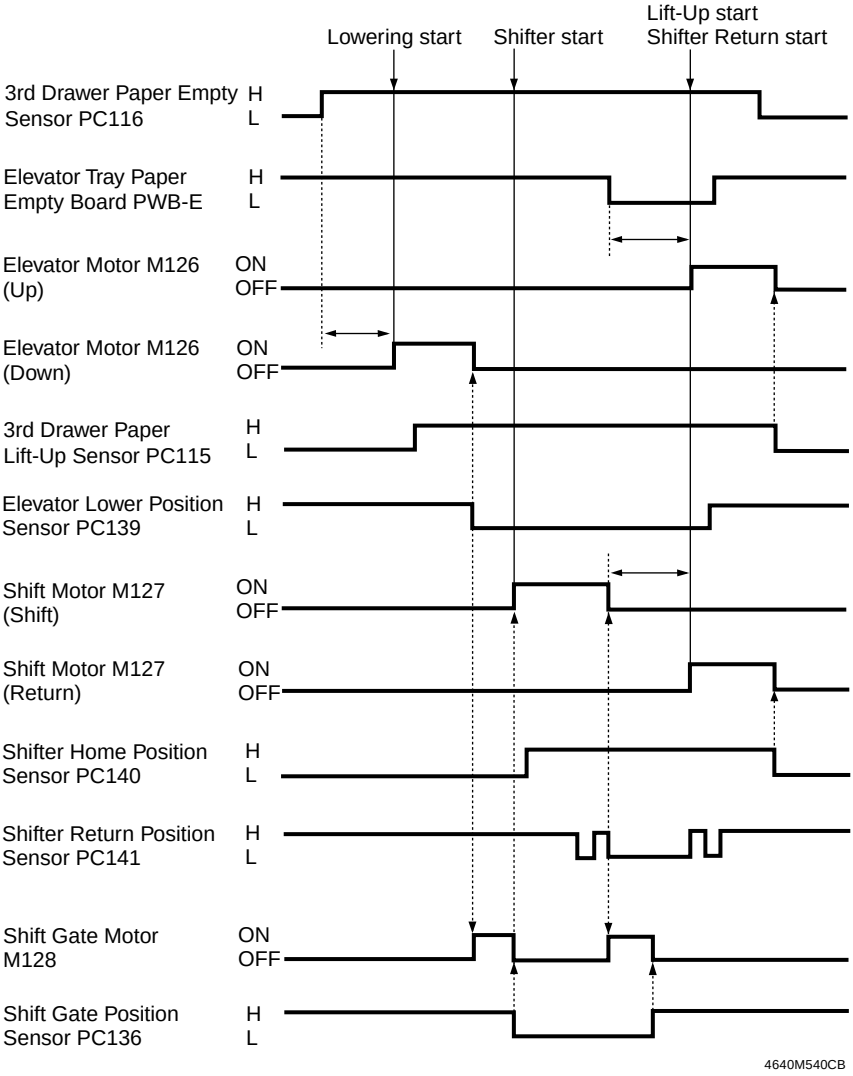
Lowering start
Shifter start
Lift-Up start
Shifter Return start
3rd Drawer Paper Empty Sensor PC116
H
L
Elevator Tray Paper Empty Board PWB-E
H
L
Elevator Motor M126 (Up)
ON
OFF
Elevator Motor M126 (Down)
ON
OFF
3rd Drawer Paper Lift-Up Sensor PC115
H
L
Elevator Lower Position Sensor PC139
H
L
Shift Motor M127 (Shift)
ON
OFF
Shift Motor M127 (Return)
ON
OFF
Shifter Home Position Sensor PC140
H
L
Shifter Return Position Sensor PC141
H
L
Shift Gate Motor M128
ON
OFF
Shift Gate Position Sensor PC136
H
L
4640M540CB

7-9. Paper Empty Detection

• Main Tray

A paper-empty condition of the Main Tray is detected at two places, the upper limit and lower limit.

At the upper limit position, a paper-empty condition is detected when paper is taken up.

At the lower limit position, a paper-empty condition is detected when the LCC is slid into the copier.

• Shift Tray

A paper-empty condition of the Shift Tray is detected by the LCC Shift Tray Paper Empty Sensor.

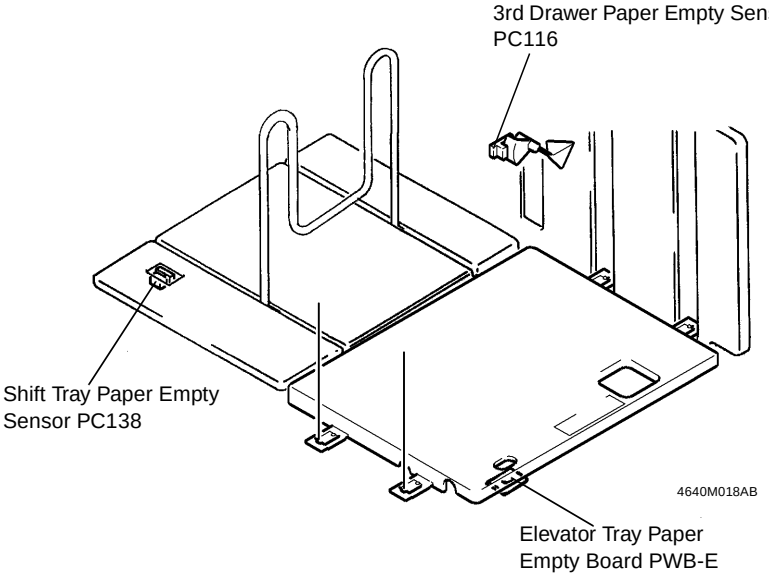

7-10. Paper Level Detection

The amount of paper still available for use, or the paper level, of the Main Tray is detected using the Elevator Motor Pulse Sensor and a pulse disk that detect the speed of the Elevator Motor.

When LCC is slid in

The Elevator Motor is energized.

↓

The Main Tray goes up.

↓

The number of pulses generated is counted for the period of time until the sensor is blocked.

↓

The number of pulses is translated to the amount of paper which is indicated on the control panel.

During a copy cycle

Paper is consumed.

↓

The Elevator Motor is energized.

↓

The Main Tray goes up.

↓

The number of pulses generated is counted for the period of time until the sensor is blocked.

↓

The number of pulses is cumulatively counted and the total count is translated to the amount of paper.

↓

The unit segment of the paper level indicator on the control panel goes out.

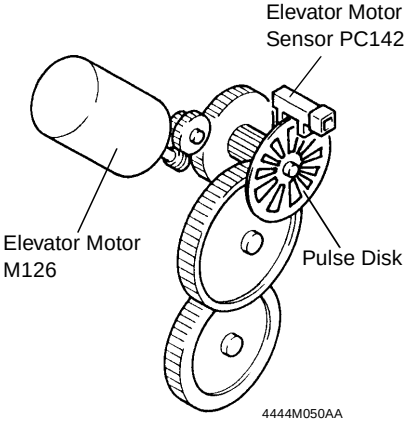

Paper Level Indicator

- 1 to 50 sheets  1134M058AA
- 50 to 200 sheets  1134M059AA
- 200 to 350 sheets  1134M060AA
- 350 to 500 sheets  1134M061AA
- 500 sheets up  1134M062AA

7-11. Drawer Lock/Release Mechanism

- When locked:
  When the LCC is slid into the copier, the locking pawl of the copier is hooked onto the locking shaft of the LCC.
- When unlocked:

Press the Drawer Paper Descent Key.

↓

The Main Tray starts lowering and blocks the LCC Lower Position Sensor.

↓

The LCC Lock Solenoid is energized and the locking pawl is disengaged from the locking shaft.

↓

The tension of the spring pushes the LCC out to the front.

- When Drawer is Slid in:
  When the drawer is slid into the cabinet, a light blocking plate blocks the 3rd Drawer Set Sensor, with which the copier determines that the drawer has been slid in position.

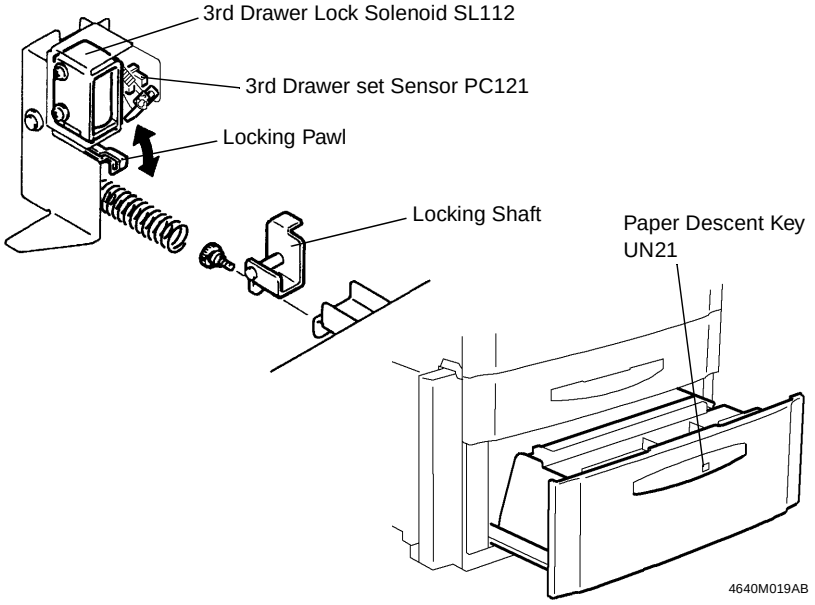

7-12. Paper Dehumidifying Heater (Option)

A heater is used to prevent image transfer failure from occurring due to damp paper as a result of variations in the environmental conditions (temperature and humidity) surrounding the copier.

	Paper Dehumidifying Switch ON		
	Power cord plugged in	Power Switch ON	
		Upper Fusing Roller Heater Lamp ON	Upper Fusing Roller Heater Lamp OFF
Paper Dehumidifying Heater	ON	OFF	ON

DIS/REASSEMBLY, ADJUSTMENT

1. DISASSEMBLY

1-1. Maintenance Schedule

- To ensure good copies and an extended service life of the Duplex Unit, it is recommended that the maintenance jobs described in this schedule be carried out.

PM Parts	Maintenance Schedule Cycle (K)		Tools Used for Cleaning	Parts No.	QTY	PM Counter	Reference Page
	Clean	Replace					
Paper Take-Up Roll	80/100	160/200	Cloth, alcohol	4002-3201-01	1	3rd Drawer (LCC)	☞ D-7
Paper Feed Roll	80/100	160/200		4002-3216-01	1	3rd Drawer (LCC)	☞ D-7
Separator Roll Assy	80/100	160/200		4002-0152-02	1	3rd Drawer (LCC)	☞ D-6
Vertical Transport Roller (Drive)	80/100	–		–	2	Cleaning 1	☞ D-8
Vertical Transport Roller (Driven)				–	8		

K = 1,000 sheets

✻ Perform the service job based on the values of the PM Counter of the copier.

✻ The above information is subject to change without notice.

✻ The above maintenance schedule is for the 45/55-cpm copier.

1-2. Removal of Exterior Parts

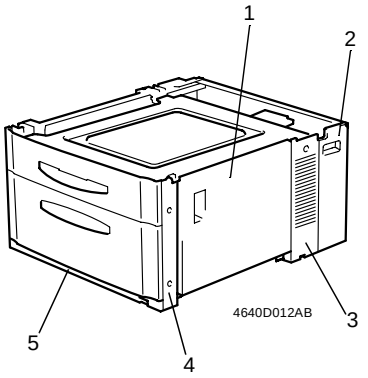

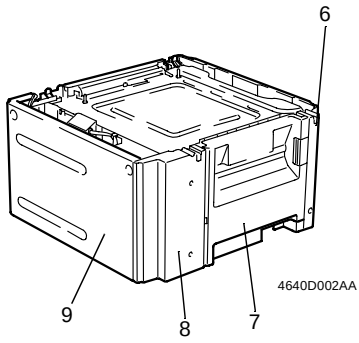

No.	Parts Name	Exterior Parts Removal Procedure
1	Lower Right Door	Remove two screws and take off the cover.
2	Toner Collecting Bottle Cover	Open to an angle of about 45°, then take off the cover.
3	Cover D	After the Toner Collecting Bottle Cover has been removed, remove one screw and take off the cover.
4	Cover A	Slide out the drawer, remove two screws, and take off the cover.
5	Lower Front Cover	After Cover A and Cover B have been removed, remove two screws and take off the cover.
6	Cover B	Remove two screws and take off the cover.
7	Lower Left Door	Open the Lower Left Door and lift it upward.
8	Cover C	After the Lower Left Door has been removed, remove two screws and take off the cover.
9	Rear Cover	Open the Toner Collecting Bottle Cover and remove the Toner Collecting Bottle; then remove two screws and take off the cover.

1-3. Removal of 3rd Drawer

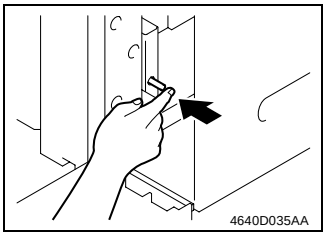

1. Slide out the Duplex Unit.
2. Open the Toner Collecting Bottle Cover and remove the Toner Collecting Bottle.
3. Press the Drawer Unlocking Lever to unlock the 3rd Drawer.

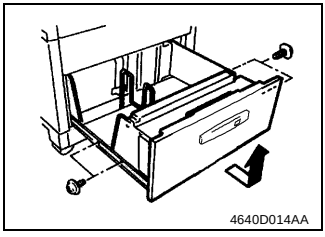

4. Unload the paper stack, remove four screws, and completely pull out the 3rd Drawer.

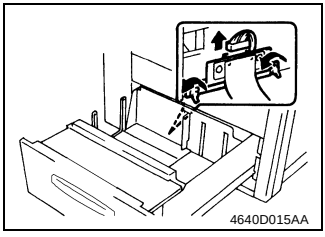

5. Unplug one connector and remove two screws and the Cabinet Transport Board.
6. Remove the 3rd Drawer.

NOTE
Hold the 3rd Drawer in position on the guide rails when removing the Cabinet Transport Board.

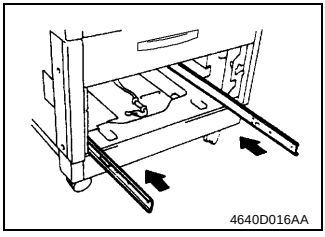

NOTE
Push the guide rails into the cabinet to avoid possible injury.

1-4. Remove of Wire Drive Pulley

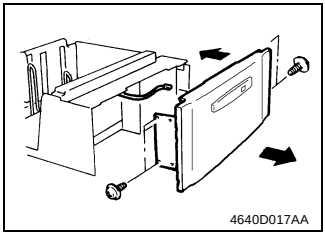

1. Remove four screws.
2. Unplug the connector and remove the Cover Assy.

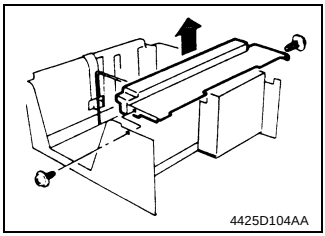

3. Remove two screws and the Internal Cover Assy.

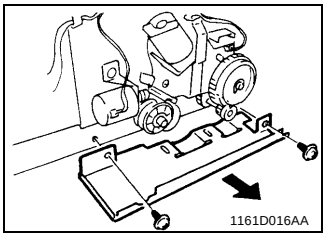

4. Remove two screws and the Drive Cover.

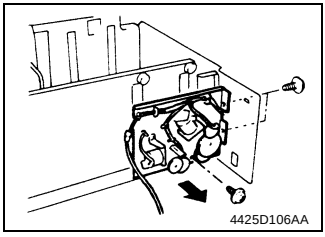

5. Unplug the connector and remove three screws and the Drive Mount Assy.

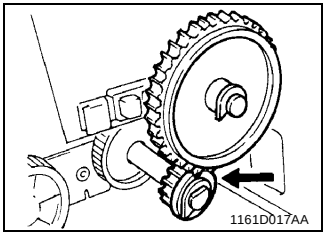

NOTE

Ensure correct meshing of gears at reinstallation.

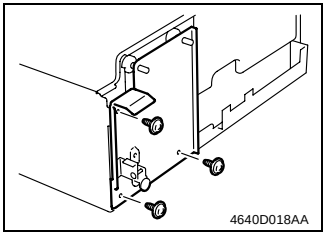

6. Remove three screws and the Reinforcement Plate Assy.

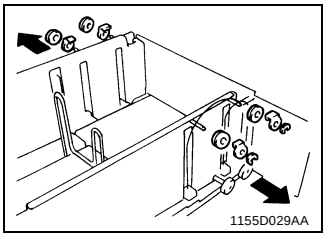

7. Snap off two E-rings.
8. Remove four pulley covers.
9. Remove four pulleys.

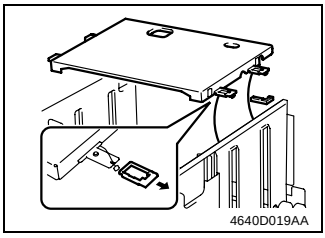

10. Remove one ground plate, four wire holders, and the Main Tray.

NOTES

- *Use care not to bend the wire.*
- *Replace the wire holders which have been removed with new ones.*

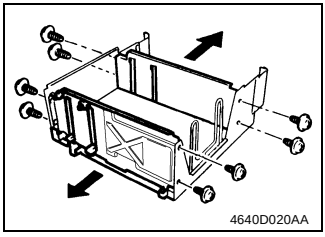

11. Remove four screws and the Front and Rear Guide Plate Assemblies.

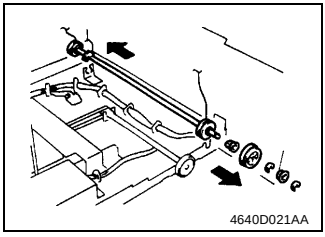

12. Snap off two E-rings and remove one bushing and two gears.
13. Remove the Wire Take-Up Pulley Assy.

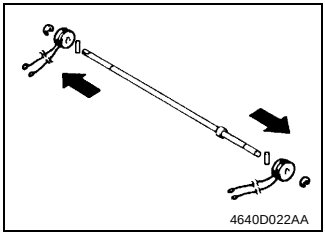

14. Snap off two E-rings, and remove two lock pins and the Wire Take-Up Pulleys.

NOTE

When reinstalling the Wire Take-Up Pulleys, make sure that the wires come off the pulleys in the same direction.

1-5. Remove of Guide Plate and Cover

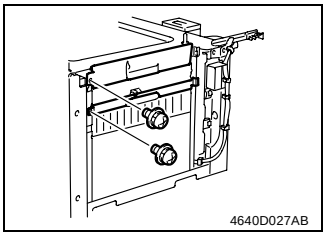

1. Remove two screws and the Lower Right Door.
2. Remove one screw each and take off the Paper Guide Plate and Cover Plate of each drawer.
3. Remove one screw and the Cover Plate.

1-6. Remove of Separator Roll Assy

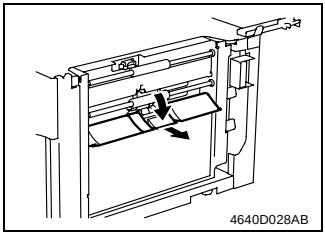

1. Press the Paper Descent key and slide out the 3rd Drawer.
2. Remove two screws and the Lower Right Door.
3. Remove the Paper Guide Plate and Cover Plate from each drawer.
4. Rotate the Separator Roll/Paper Guide Plate 90° in the direction of the arrow and remove the assy.

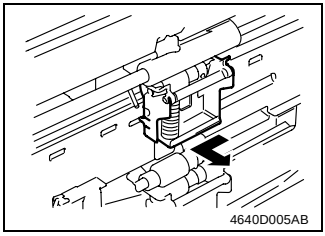

5. Loosen one screw and remove the Separator Roll Mounting Bracket Assy.

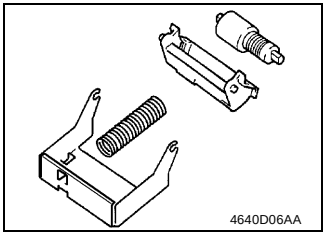

6. Unhook a spring and remove a holder from the Separator Roll Mounting Bracket Assy.
7. Remove the Separator Roll Assy from the holder.

1-7. Removal of Paper Take-Up Roll/Feed Roll Assy

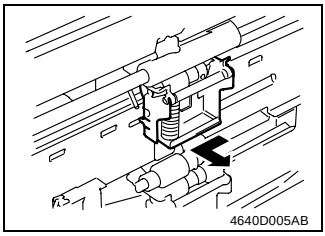

1. Press the Paper Descent key and slide out the 3rd Drawer.
2. Remove two screws and the Lower Right Door.
3. Remove the Paper Guide Plate and Cover Plate from each drawer.
4. Rotate the Separator Roll/Paper Guide Plate 90° in the direction of the arrow and remove the assy.
5. Loosen one screw and remove the Separator Roll Mounting Bracket Assy.

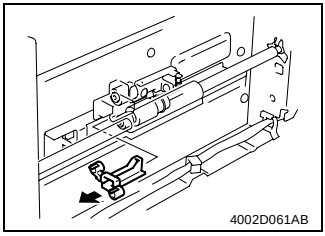

6. Remove the holder from the Paper Take-Up Roll/ Feed Roll Assy.

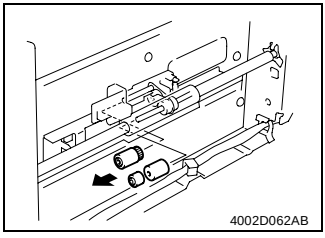

7. Remove the Paper Take-Up Roll and Feed Roll.

1-8. Cleaning of Separator Roll and Paper Take-Up Roll/Feed Roll

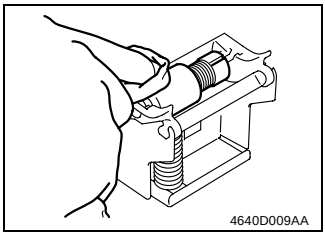

1. Press the Paper Descent key and slide out the 3rd Drawer.
2. Remove the Paper Guide Plate and Cover Plate from each drawer.
3. Rotate the Separator Roll/Paper Guide Plate 90° in the direction of the arrow and remove the assy.
4. Remove the Separator Roll Mounting Bracket Assy from the drawer.
5. Using a soft cloth dampened with alcohol, wipe the surface of the Separator Roll clean of dirt.

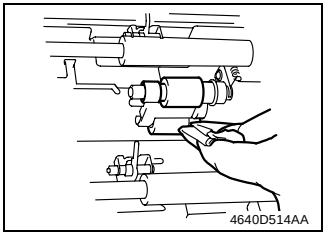

6. Using a soft cloth dampened with alcohol, wipe the surface of the Paper Take-Up Roll and Feed Roll clean of dirt.

1-9. Cleaning of Vertical Transport Rollers

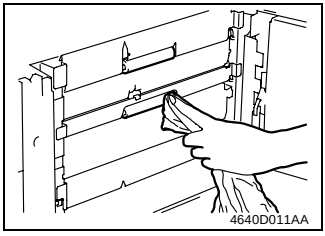

1. Open the Lower Right Door.
2. Using a soft cloth dampened with alcohol, wipe the surface of the Vertical Transport Rollers.

2. ADJUSTMENT

2-1. Adjustment of 3rd Drawer Reference Position

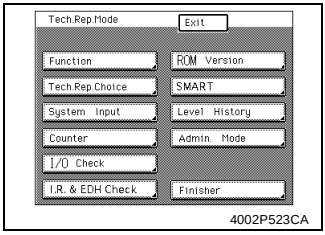

4002P523CA

1. Press the Utility key and touch “Meter Count.”
2. Press the following keys in this order to show the Tech. Rep. mode screen: Stop → 0 → 0 → Stop → 0 → 1.
3. Touch “Function.”

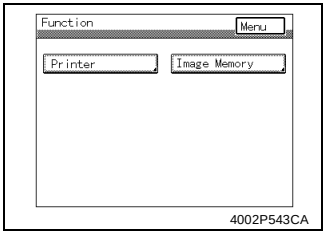

4002P543CA

4. Touch “Printer.”

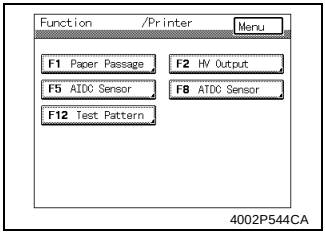

4002P544CA

5. Touch “F12 Test Pattern.”

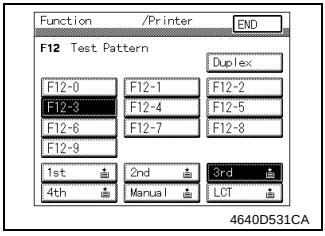

4640D531CA

6. Touch “F12-3.”
7. Touch “3rd.”
8. Press the Start key and Stop key, in that order, to produce a test print.

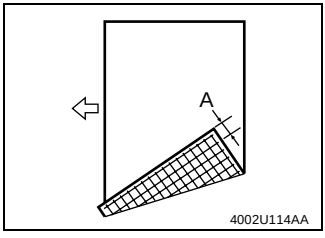

4002U114AA

9. Measure width A, which is the dimension between the leading edge and the second line, and check to see if it meets the specifications.

✻ Specifications: 8.5 ± 1.0 mm

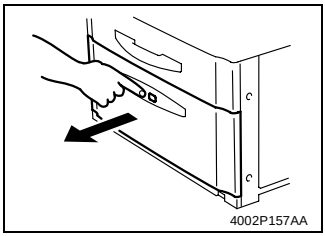

4002P157AA

10. If the measured width falls outside the specified range, perform the following steps to make an adjustment.
11. Press the Paper Descent key and slide out the 3rd Drawer.

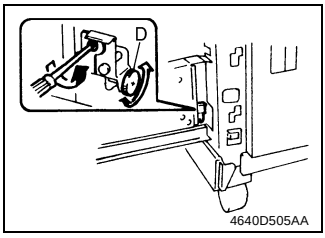

4640D505AA

12. Loosen the adjusting screw and turn screw D clockwise or counterclockwise as necessary.

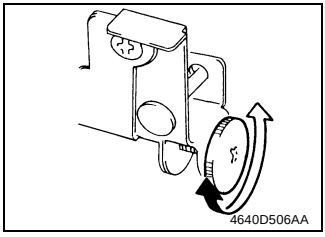

4640D506AA

- If width A on the test print is greater than the specifications, turn screw D clockwise.
- If width A on the test print is smaller than the specifications, turn screw D counterclockwise.

13. Produce a test print again to make sure that the adjustment has been made properly.

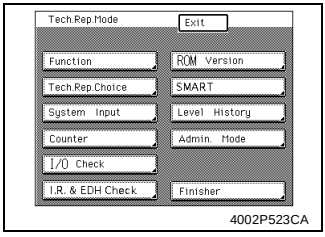

4002P523CA

14. Press the Panel Reset key and call the Tech. Rep. Mode menu to the Touch Panel.
15. Press the Stop key and then Start key to show the Adjust screen.

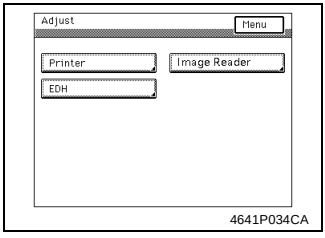

4641P034CA

16. Touch “Printer.”

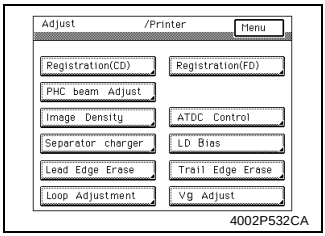

4002P532CA

17. Touch “Registration (CD).”

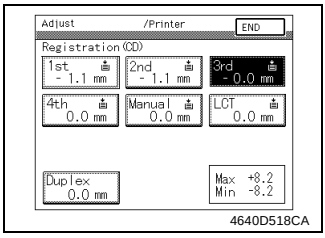

4640D518CA

18. Touch “3rd.”
19. Press the Start key to produce a test print.

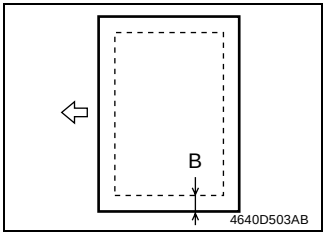

4640D503AB

20. Check to see if width B meets the specifications.
✻ Specifications: 5 ± 0.5 mm

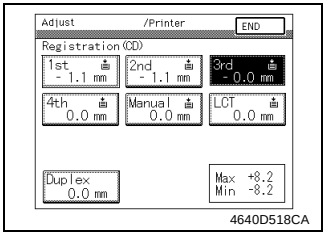

4640D518CA

21. If width B falls outside the specified range, press the Clear key and enter registration from the 10-Key Pad.
✻ Use the Access key to enter a “+” or “-” sign.
22. Produce a test print again and check for correct registration.

2-2. Adjustment of Shifter Transport Timing Belt

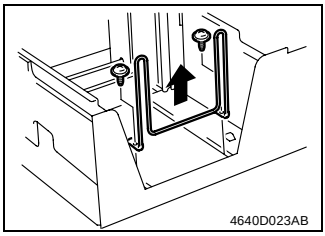

1. Slide out the 3rd Drawer and remove it.
2. Remove two screws and the Shifter.

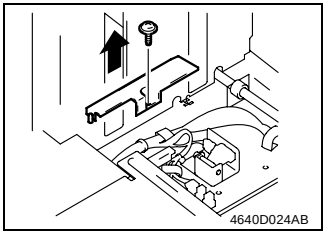

3. Raising the Main Tray with a hand, remove one screw and the harness cover.

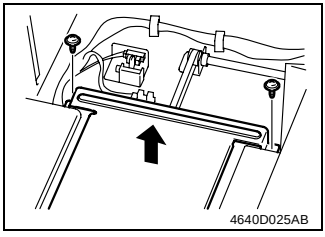

4. Remove two screws that secure the Shift Tray in position.

NOTE
During reassembly, be careful that the Main Tray wire will easily come unwound.

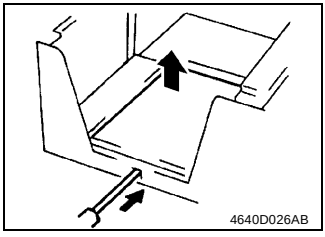

5. Disengage the Shift Tray lock by pressing the lock lever with a screwdriver as shown on the left.
6. Remove the Shift Tray.

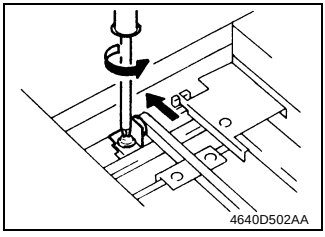

7. As illustrated on the left, loosen one screw that secures the Tension Pulley Assy and move the assy in the direction of the arrow.
8. Then tighten the mounting screw.

MISFEED DETECTION

1. MISFEED DETECTION

1-1. Location of Misfeed Detecting Sensors

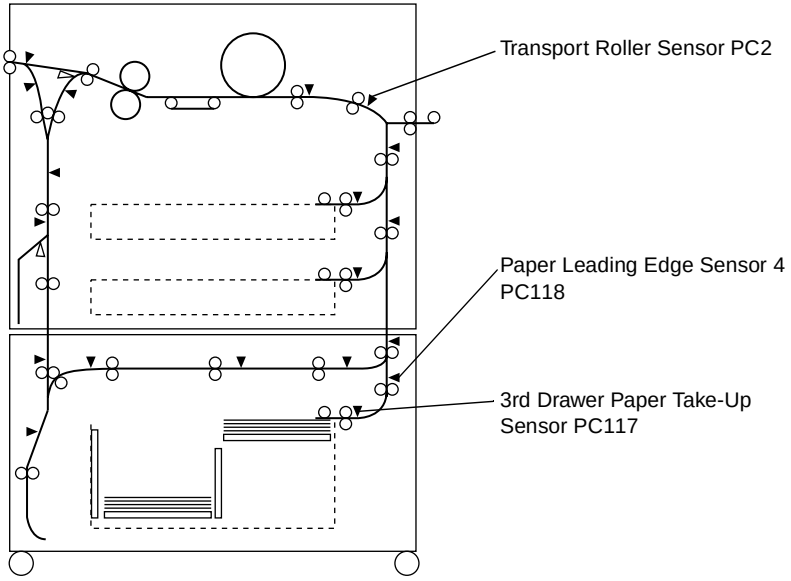

1-2. Misfeed Detection Types and Detection Timings

- The following lists the types of misfeed detection and detection timings for different misfeed locations within the Duplex Unit.
- The symbol “L” (for the leading edge) and “T” (for the trailing edge) given in ( ) indicate the particular edge of the paper detected by the sensor.

Type	Detection Start	Detection
Paper take-up failure	3rd Drawer Paper Take-Up Motor energized	3rd Drawer Paper Take-Up Sensor (L)
Trailing edge detection by the 3rd Drawer Paper Take-Up Sensor, trailing edge detection by Paper Leading Edge Sensor 4	3rd Drawer Paper Take-Up Sensor (L)	3rd Drawer Paper Take-Up Sensor (T)
		Paper Leading Edge Sensor 4 (T)
Leading edge detection by Paper Leading Edge Sensor 4	3rd Drawer Paper Take-Up Sensor (L)	Paper Leading Edge Sensor 4 (L)
Leading edge detection by the Transport Roller Sensor	Paper Leading Edge Sensor 4 (L)	Transport Roller Sensor (L)

2. TYPES OF MALFUNCTION DETECTION AND DETECTION TIMING

Malfunction Code	Description	Detection Timing
C0049	Vertical Transport Cooling Fan Motor malfunction	• The Motor Lock signal (H) is detected continuously even after the lapse of a given period of time after the motor has been energized.
C0990	Lifting motion failure	• The 3rd Drawer Paper Lift-Up Sensor is not blocked even when given numbers of both the rising and falling edges of LOW-going and HIGH-going signals of the Elevator Motor Pulse Sensor are counted after the Elevator Motor has started turning backward (for upward motion). • The 3rd Drawer Paper Lift-Up Sensor does not detect the upper limit position even after the lapse of a given period of time after the Elevator Motor has started turning backward (for upward motion). • The Elevator Lower Position Sensor is not unblocked even when given numbers of both the rising and falling edges of LOW-going and HIGH-going signals of the Elevator Motor Pulse Sensor are counted after the Elevator Motor has started turning backward (for upward motion). • The Lower Position Overrun Detecting Sensor is not blocked even after the lapse of a given period of time after the Elevator Motor has started turning forward (for downward motion). • The Elevator Lower Position Sensor is not blocked even when given numbers of both the rising and falling edges of LOW-going and HIGH-going signals of the Elevator Motor Pulse Sensor are counted after the Elevator Motor has started turning forward (for downward motion). • The 3rd Drawer Paper Lift-Up Sensor is not unblocked even when given numbers of both the rising and falling edges of LOW-going and HIGH-going signals of the Elevator Motor Pulse Sensor are counted after the Elevator Motor has started turning forward (for downward motion).
C0994	Elevator Motor malfunction	• No turning pulse edges are detected of the Elevator Motor Pulse Sensor even after the lapse of a given period of time after the motor has started turning backward or forward (upward or downward motion).
C0996	3rd Drawer lock release failure	• The 3rd Drawer is not released within a given period of time after the 3rd Drawer Lock Solenoid has been energized.

Malfunction Code	Description	Detection Timing
C0997	Shift Gate Position Sensor malfunction	• The Shift Gate Position Sensor is not unblocked even after the lapse of a given period of time after the Shift Gate Motor has started turning to allow the Shift Gate to block the paper stack. • The Shift Gate Position Sensor is not blocked even after the lapse of a given period of time after the Shift Gate Motor has started turning to retract the Shift Gate.
C0998	Shifter return failure	• The Nth blocking edge of the Shifter Return Position Sensor is not detected even when given numbers of both the rising and falling edges of LOW-going and HIGH-going signals of the Shift Motor Pulse Sensor are counted after the Shift Motor has started turning backward (for rightward motion) (8-1/2 × 11C: N=1; A4C: N=2). • The Nth blocking edge of the Shifter Return Position Sensor is not detected even after the lapse of a given period of time after the Shift Motor has started turning backward (for rightward motion) (8-1/2 × 11C: N=1; A4C: N=2). • The Shifter Home Position Sensor is not unblocked even when given numbers of both the rising and falling edges of LOW-going and HIGH-going signals of the Shift Motor Pulse Sensor are counted after the Shift Motor has started turning backward (for rightward motion). • The Shifter Home Position Sensor is not blocked even when given numbers of both the rising and falling edges of LOW-going and HIGH-going signals of the Shift Motor Pulse Sensor are counted after the Shift Motor has started turning forward (for leftward motion). • The Shifter Home Position Sensor is not blocked even after the lapse of a given period of time after the Shift Motor has started turning forward (for leftward motion). • The unblocking edge of the Shifter Return Position Sensor is not detected even when given numbers of both the rising and falling edges of LOW-going and HIGH-going signals of the Shift Motor Pulse Sensor are counted after the Shift Motor has started turning forward (for leftward motion).

Malfunction Code	Description	Detection Timing
C099C	Shift Motor's failure to turn	• Neither the rising edges nor falling edges of LOW-going and HIGH-going signals of the Shift Motor Pulse Sensor are detected even after the lapse of a given period of time while the Shift Motor is turning backward/forward (for rightward/leftward motion).

PF-208

SERVICE MANUAL

10794

CONTENTS

GENERAL, MECHANICAL/ELECTRICAL

1. SPECIFICATIONS M-1
2. COMPONENT IDENTIFICATION M-1
3. CROSS-SECTIONAL VIEW M-2
4. DRIVE SYSTEM COMPONENT LAYOUT M-2
5. ELECTRICAL PARTS LAYOUT M-3
6. VERTICAL TRANSPORT SECTION M-4
   - 6-1. Vertical Transport Drive Mechanism M-4
   - 6-2. Vertical Transport Motor Control M-4
7. PAPER TAKE-UP/FEEDING SECTION M-5
   - 7-1. Drawer Paper Take-Up Mechanism M-5
     - (1) Drawer Paper Take-Up Mechanism M-5
     - (2) Paper Separating Mechanism M-5
     - (3) Paper Pressure Releasing Mechanism M-6
     - (4) Paper Take-Up Roll Retraction Mechanism M-6
   - 7-2. Paper Take-Up Control M-7
     - (1) Paper Take-Up Motor Control M-7
     - (2) Paper Take-Up Retry Control M-7
     - (3) Paper Take-Up Interval Control M-8
     - (4) Double Feed Paper Take-Up Control M-8
   - 7-3. Fixed Drawer M-9
   - 7-4. Drawer-in-Position Detection M-9
   - 7-5. Drawer Paper Lift-Up Mechanism M-10
   - 7-6. Paper Empty Detection M-12
   - 7-7. Paper Level Detection M-13
   - 7-8. Paper Dehumidifying Heater (Option) M-14

DIS/REASSEMBLY, ADJUSTMENT

1. DISASSEMBLY D-1
   - 1-1. Maintenance Schedule D-1
   - 1-2. Removal of Exterior Parts D-2
   - 1-3. Removal of Paper Guide Plates and Cover Plates D-3
   - 1-4. Removal of Paper Separator Roll Assy from Drawer D-3
   - 1-5. Removal of Paper Take-Up Roll/Feed Roll Assy from Drawer D-4
   - 1-6. Removal of Paper Take-Up Motor from Drawer D-4
   - 1-7. Cleaning of Separator Roll and Paper Take-Up Roll/Feed Roll. D-5
   - 1-8. Cleaning of Vertical Transport Rollers D-5
2. ADJUSTMENT D-6
   - 2-1. Adjustment 0f 3rd and 4th Drawer Reference Position D-6

MISFEED DETECTION

1. MISFEED DETECTION T-1
   - 1-1. Location of Misfeed Detecting Sensors T-1
   - 1-2. Misfeed Detection Timing T-1
2. MALFUNCTION DETECTION T-2

GENERAL, MECHANICAL/ELECTRICAL

NOTE

A description of the Duplex Unit (Turnover Unit and Horizontal Transport Section) is contained in PF-7D Service Manual.

1. SPECIFICATIONS

Type	:	2 Way Paper Feed Cabinet
Type of Copy Paper	:	Plain and recycled paper
Paper Sizes	:	Upper: A5L to A3L, 5-1/2 × 8-1/2L to 11 × 17L Lower: A4L to A3L, 11 × 8-1/2L to 11 × 17L
Paper Weight	:	60 to 90 g/m^2
Capacity	:	500 sheets × 2 (when 80 g/m^2 paper is used) 550 sheets × 2 (when 20 lbs. paper is used)
Power Source	:	DC 24 V, DC 5 V (supplied from copier)
Dimensions	:	Width 664 mm or 26-1/4 in Depth 730 mm or 28-3/4 in Height 388 mm or 15-1/4 in
Weight	:	45.5 kg or 100-1/4 lbs.

2. COMPONENT IDENTIFICATION

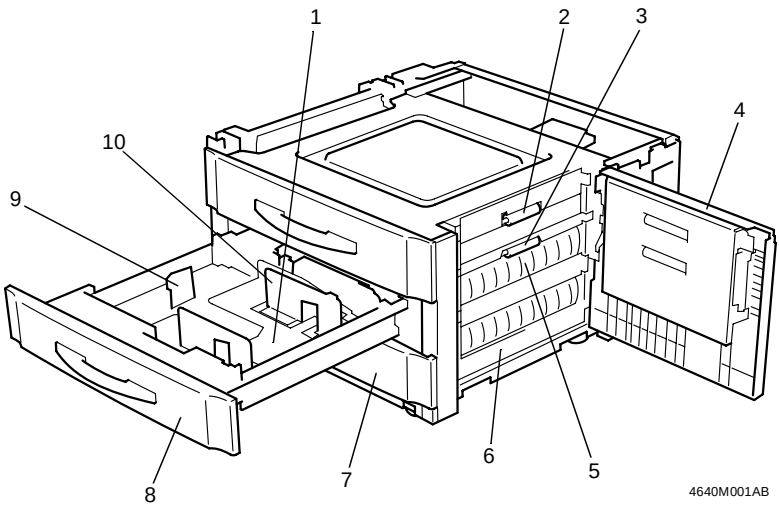

1. Paper Lifting Plate
2. Vertical Transport Roller 2 (Drive)
3. Vertical Transport Roller 1 (Drive)
4. Lower Right Door
5. Separator Roll/Paper Guide Plate
6. Cover Plate
7. 4th Drawer
8. 3rd Drawer
9. Trailing Edge Stop
10. Edge Guide

3. CROSS-SECTIONAL VIEW

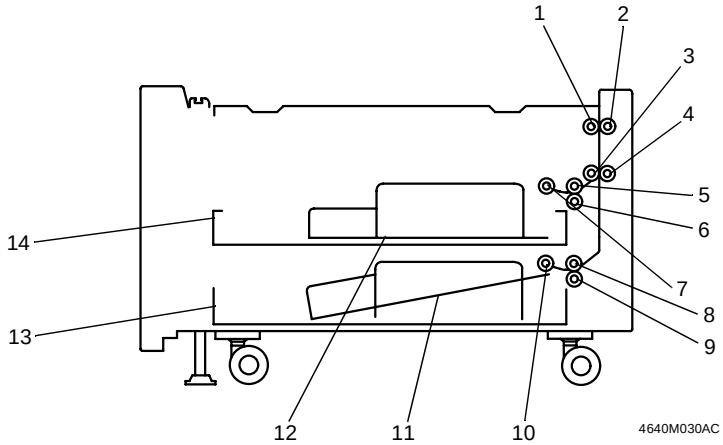

1. Vertical Transport Roller 2 (Drive)
2. Vertical Transport Roller 2 (Driven)
3. Vertical Transport Roller 1 (Drive)
4. Vertical Transport Roller 1 (Driven)
5. 3rd Drawer Feed Roll
6. 3rd Drawer Separator Roll
7. 3rd Drawer Take-Up Roll
8. 4th Drawer Feed Roll
9. 4th Drawer Separator Roll
10. 4th Drawer Take-Up Roll
11. 4th Drawer Lifting Plate
12. 3rd Drawer Lifting Plate
13. 4th Drawer
14. 3rd Drawer

4. DRIVE SYSTEM COMPONENT LAYOUT

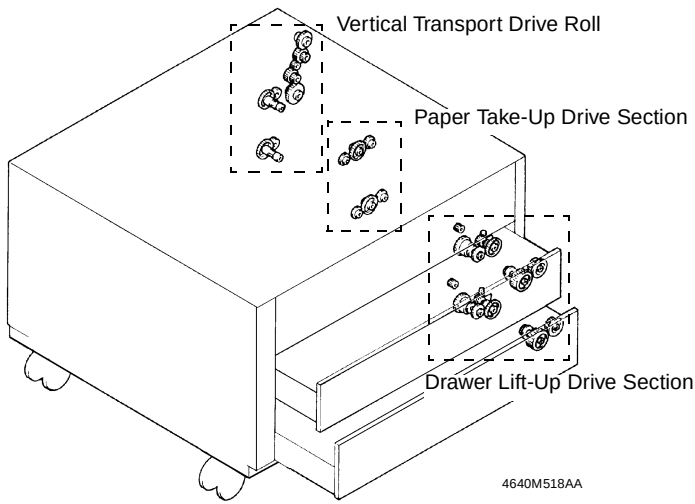

5. ELECTRICAL PARTS LAYOUT

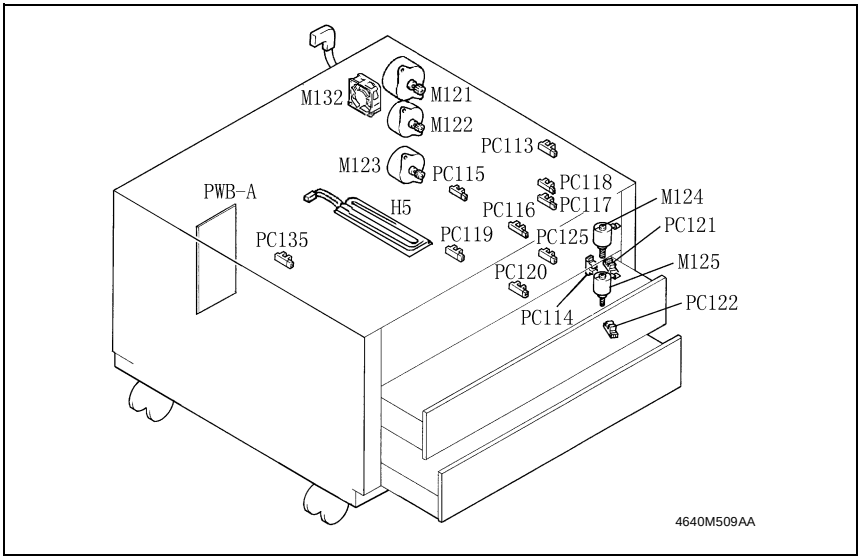

Symbol	Name	Symbol	Name
H5	Paper Dehumidifying Heater (Option)	PC117	3rd Drawer Paper Take-Up Sensor
M121	Vertical Transport Motor	PC118	Paper Leading Edge Sensor 4
M122	3rd Drawer Paper Take-Up Motor	PC119	4th Drawer Paper Lift-Up Sensor
M123	4th Drawer Paper Take-Up Motor	PC120	4th Drawer Paper Empty Sensor
M124	3rd Drawer Paper Lift-Up Motor	PC121	3rd Drawer Set Sensor
M125	4th Drawer Paper Lift-Up Motor	PC122	4th Drawer Set Sensor
M132	Vertical Transport Cooling Fan Motor	PC123	3rd Drawer Lift-Up Motor Pulse Sensor
PC113	Paper Leading Edge Sensor 3	PC124	4th Drawer Lift-Up Motor Pulse Sensor
PC114	Lower Right Door Sensor	PC125	4th Drawer Paper Take-Up Sensor
PC115	3rd Drawer Paper Lift-Up Sensor	PC135	Toner Collecting Bottle Set Sensor
PC116	3rd Drawer Paper Empty Sensor	PWB-A	Control Board

6. VERTICAL TRANSPORT SECTION

6-1. Vertical Transport Drive Mechanism

A motor drives the Vertical Transport Rollers.

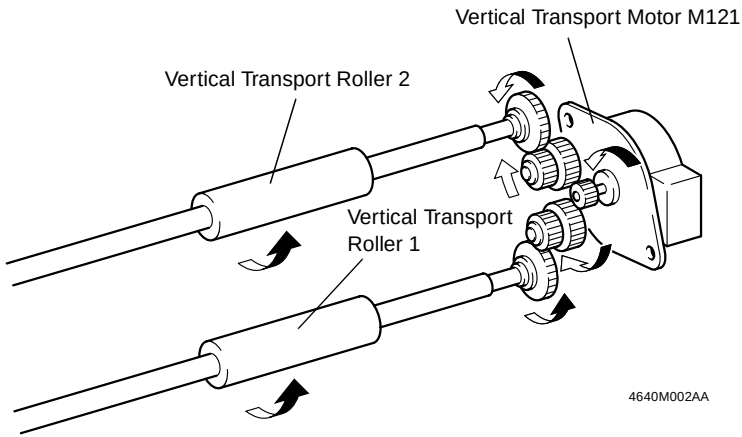

6-2. Vertical Transport Motor Control

The Vertical Transport Motor is controlled by the signal output from the Control Board.

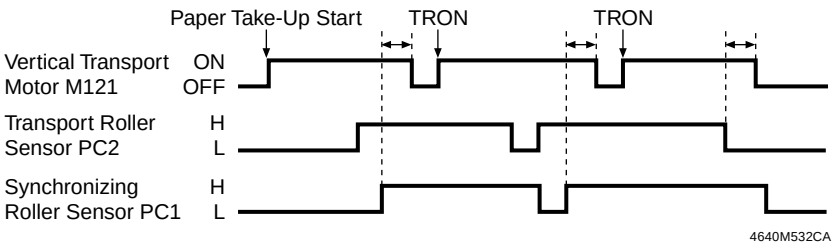

7. PAPER TAKE-UP/FEEDING SECTION

7-1. Drawer Paper Take-Up Mechanism

(1) Drawer Paper Take-Up Mechanism

Drive for the paper take-up sequence comes from a motor.

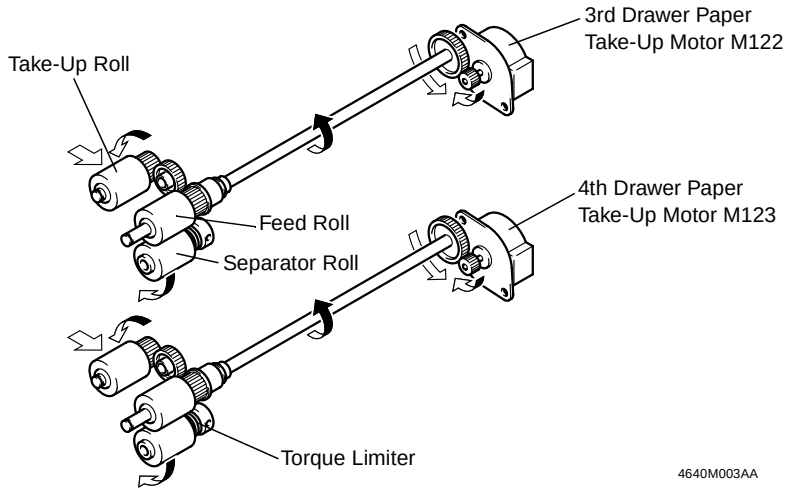

(2) Paper Separating Mechanism

The difference in friction coefficient between the Feed Roll and Separator Roll is used to stop the rotation of the Separator Roll for the prevention of double feed.
Normal feeding:

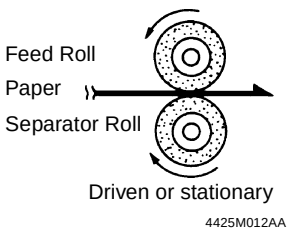

- When only one sheet of paper is taken up, the friction coefficient on the top side of the paper is equal to that on the underside. The Separator Roll is driven by the Feed Roll, which results in the paper being fed on.

Double feeding:

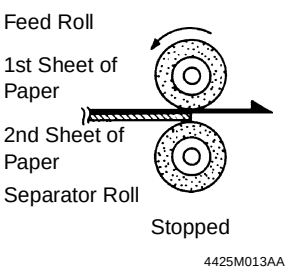

- Since the friction coefficient between the second sheet of paper and the Separator Roll is greater than that between the first and second sheets of paper, the Separator Roll remains stationary, allowing the Feed Roll to feed only the first sheet of paper

(3) Paper Pressure Releasing Mechanism

When the drawer is pulled out of the copier, the Pressure Release Rail presses down the Separator Roll Assy, which results in the Separator Roll being disengaged from the Feed Roll.

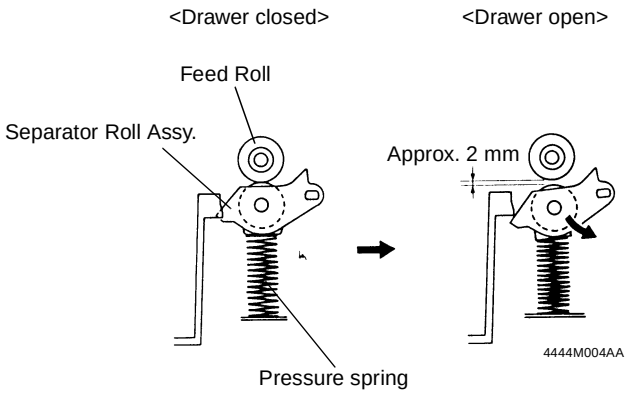

(4) Paper Take-Up Roll Retraction Mechanism

When the drawer is pulled out, the Pressure Release Lever pushes up the Paper Take-Up Roll, freeing the paper from the Paper Take-Up Roll.

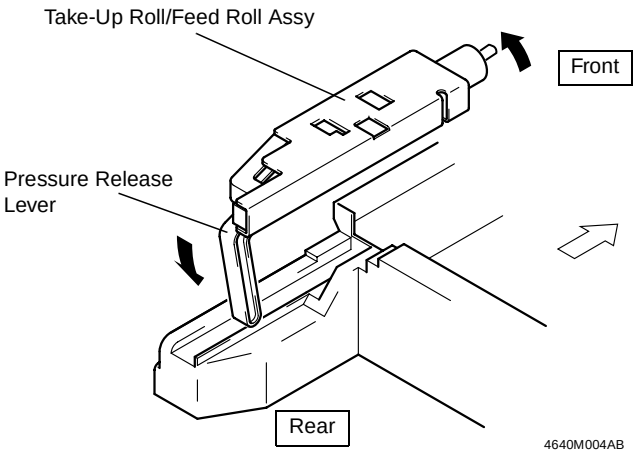

7-2. Paper Take-Up Control

(1) Paper Take-Up Motor Control

The Paper Take-Up Motor is controlled by the signal output from the Control Board.

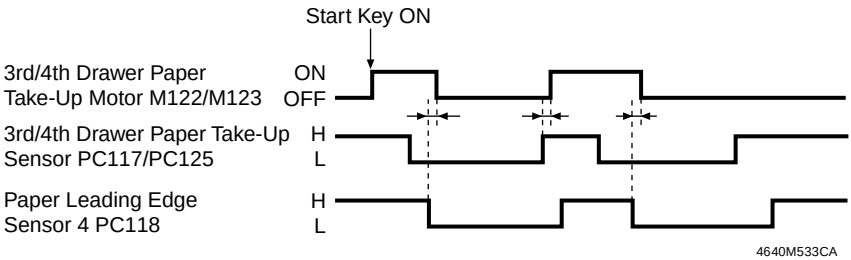

(2) Paper Take-Up Retry Control

To minimize the occurrence of a paper misfeed, the paper take-up sequence is temporarily halted if the paper fails to reach the Paper Take-Up Detecting Sensor within a given period of time after the sequence has been started. The paper take-up sequence is then performed again. These paper take-up sequences are repeated a given number of times.

Paper Take-Up Retry	No. of Paper Take-Up Retry Sequences
	Three Times

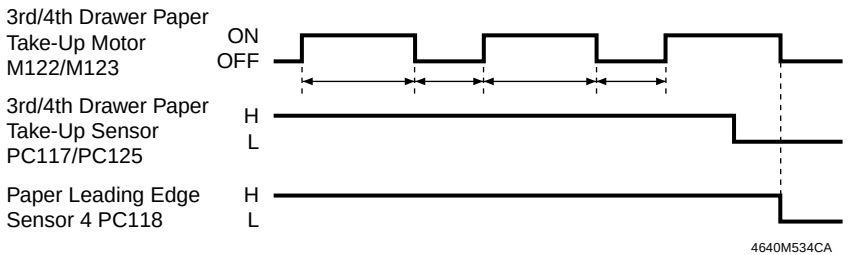

(3) Paper Take-Up Interval Control

To minimize the occurrence of a paper misfeed due to improper paper separation, the paper take-up sequence is temporarily halted if the paper fails to reach the Paper Take-Up Detecting Sensor within a given period of time after the sequence has been started. After another given period of time, the paper take-up sequence is performed a second time, thereby ensuring a good interval between two paper take-up sequences.

(4) Double Feed Paper Take-Up Control

If a sheet of paper has reached the Paper Take-Up Sensor when the trailing edge of a preceding sheet of paper moves past the Paper Take-Up Sensor, feeding of the second sheet of paper starts only after the trailing edge of the first sheet of paper moves past Paper Leading Edge Sensor SW2. This reduces the number of misfeeds that would otherwise be caused by double feeding.

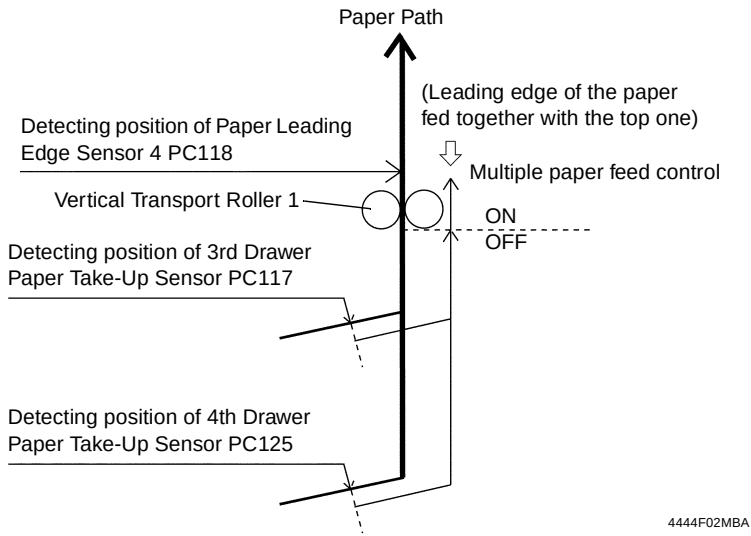

7-3. Fixed Drawer

- To change the paper size of each drawer, it is necessary to reposition the Trailing Edge Stop and Edge Guide.
- When the Trailing Edge Stop and Edge Guide have been repositioned, the new paper size should be entered through the control panel.

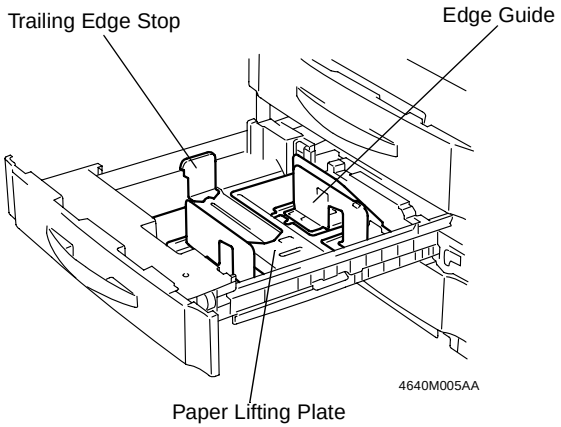

- Paper Sizes That Can be Loaded

	3rd Drawer	4th Drawer
Metric Areas	A5L to A3L	A4L to A3L
Inch Areas	5-1/2 × 8-1/2L to 11 × 17L	11 × 8-1/2L to 11 × 17L

7-4. Drawer-in-Position Detection

When a drawer is slid into the cabinet, the Drawer Set Sensor is blocked and the copier determines that the drawer has been slid in position.

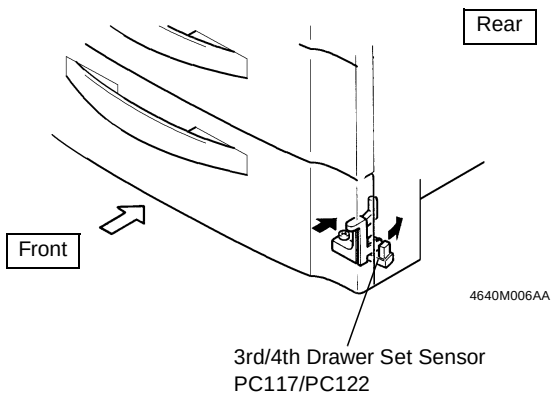

7-5. Drawer Paper Lift-Up Mechanism

The paper lifting mechanism employs the Lift-Up Motor that causes the paper stack loaded in the drawer to be pressed up against the Paper Take-Up Roll with a given pressure, thereby ensuring positive paper take-up.

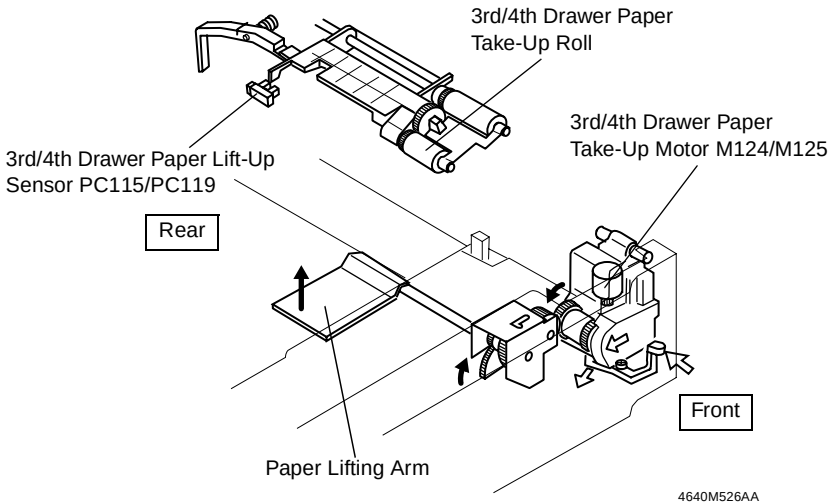

When the drawer is slid in

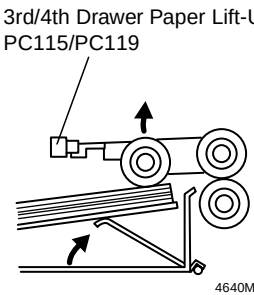

The Lift-Up Motor is energized.
↓
The Paper Lifting Arm goes up.
↓
The Lift-Up Sensor is blocked.
↓
The Lift-Up Motor is deenergized.

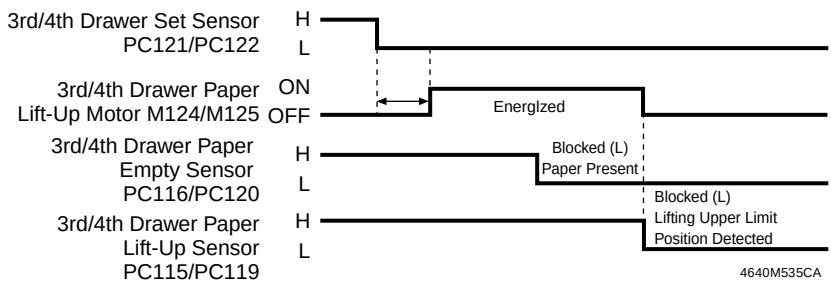

During a copy cycle

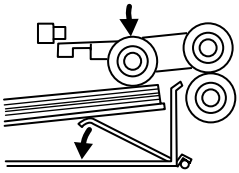

4640M523AB

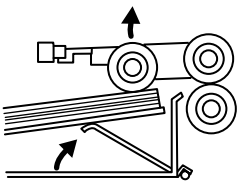

4640M522AB

Paper is consumed.

↓

The Paper Take-Up Roll lowers.

↓

The Lift-Up Sensor is unblocked.

↓

The Lift-Up Motor is energized.

↓

The Paper Lifting Arm goes up.

↓

The Lift-Up Sensor is blocked.

↓

The Lift-Up Motor is deenergized.

7-6. Paper Empty Detection

The Paper Empty Sensor detects a paper-empty condition in the drawer.

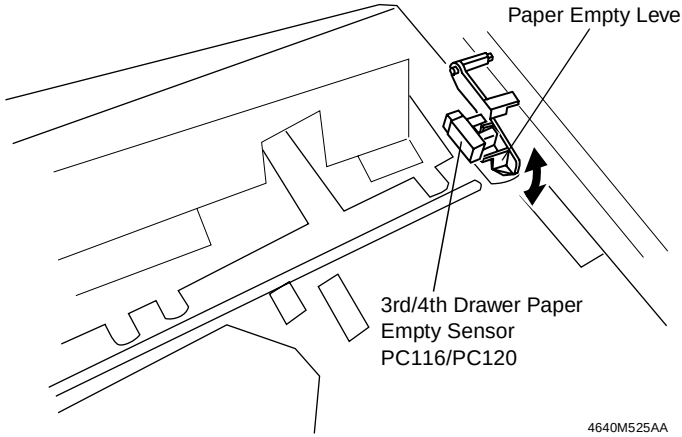

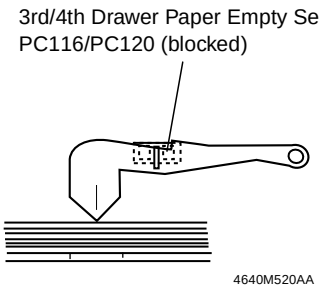

Paper Present

The paper stack raises the Paper Empty Lever, which blocks the Paper Empty Sensor. The copier then determines that the drawer is loaded with paper.

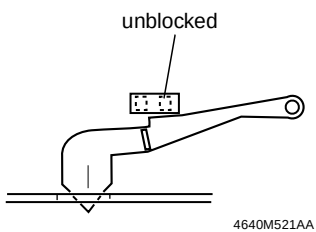

Paper Not Present

If the drawer runs out of paper, the Paper Empty Lever drops into a hole in the Paper Lifting Plate. This unblocks the Paper Empty Sensor and the copier determines that the drawer has run out of paper.

7-7. Paper Level Detection

The amount of paper still available for use, or the paper level, of the drawer is detected by the Lift-Up Motor Pulse Sensor and a pulse disk. They function to detect the speed of the Lift-Up Motor.

When the drawer is slid in

The Lift-Up Motor is energized.
↓
The number of pulses generated is counted for the period of time until the Lift-Up Sensor is blocked.
↓
The number of pulses is translated to the amount of paper which is indicated on the control panel.

During a copy cycle

Paper is consumed.
↓
The Lift-Up Motor is energized.
↓
The number of pulses generated is counted for the period of time until the Lift-Up Sensor is blocked.
↓
The number of pulses is cumulatively counted and the total count is translated to the amount of paper.
↓
The unit segment of the paper level indicator on the control panel goes out.

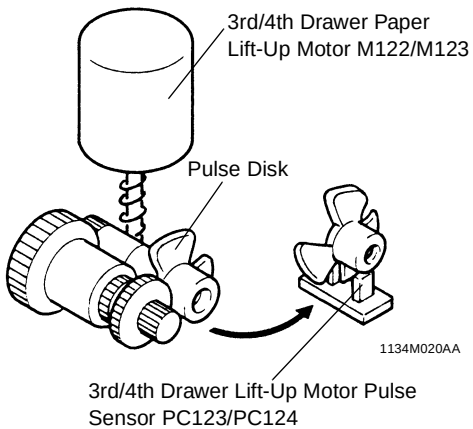

Paper Level Indicator

- 1 to 50 sheets  1134M058AA
- 50 to 200 sheets  1134M059AA
- 200 to 350 sheets  1134M060AA
- 350 to 500 sheets  1134M061AA
- 500 sheets up  1134M062A

7-8. Paper Dehumidifying Heater (Option)

A heater is used to prevent image transfer failure from occurring due to damp paper as a result of variations in the environmental conditions (temperature and humidity) surrounding the copier.

	Paper Dehumidifying Switch ON		
	Power cord plugged in	Power Switch ON	
		Upper Fusing Roller Heater Lamp ON	Upper Fusing Roller Heater Lamp OFF
Paper Dehumidifying Heater	ON	OFF	ON

DIS/REASSEMBLY, ADJUSTMENT

1. DISASSEMBLY

1-1. Maintenance Schedule

To ensure good copies and an extended service life of the Duplex Unit, it is recommended that the maintenance jobs described in this schedule be carried out.

PM Parts	Maintenance Schedule Cycle (K)		Tools Used for Cleaning	Parts No.	QTY	PM Counter	Reference Page
	Clean	Replace					
Paper Take-Up Roll	80/100	160/200	Cloth, alcohol	4002-3201-01	2	3rd Drawer (LCC) 4th Drawer	☞ D-4
Paper Feed Roll	80/100	160/200		4002-3216-01	2	3rd Drawer (LCC) 4th Drawer	☞ D-4
Separator Roll Assy	80/100	160/200		4002-0152-02	2	3rd Drawer (LCC) 4th Drawer	☞ D-3
Vertical Transport Roller (Drive)	80/100	–		–	2	Cleaning 1	☞ D-5
Vertical Transport Roller (Driven)				–	8		

K = 1,000 sheets

✻ Perform the service job based on the values of the PM Counter of the copier.

✻ The above information is subject to change without notice.

✻ The above maintenance schedule is for the 45/55-cpm copier.

1-2. Removal of Exterior Parts

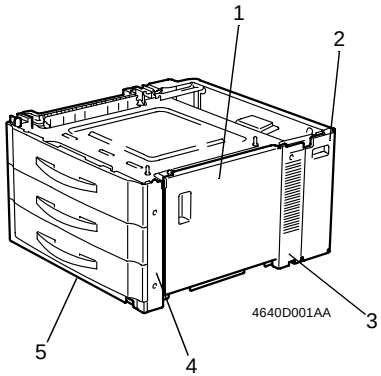

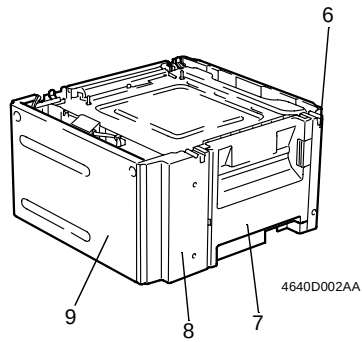

No.	Parts Name	Exterior Parts Removal Procedure
1	Lower Right Door	Remove two screws and take off the cover.
2	Toner Collecting Bottle Cover	Open to an angle of about 45°, then take off the cover.
3	Cover D	After the Toner Collecting Bottle Cover has been removed, remove one screw and take off the cover.
4	Cover A	Slide out the drawer, remove two screws, and take off the cover.
5	Lower Front Cover	After Cover A and Cover B have been removed, remove two screws and take off the cover.
6	Cover B	Remove two screws and take off the cover.
7	Lower Left Door	Open the Lower Left Door and lift it upward.
8	Cover C	After the Lower Left Door has been removed, remove two screws and take off the cover.
9	Rear Cover	Open the Toner Collecting Bottle Cover and remove the Toner Collecting Bottle; then remove two screws and take off the cover.

1-3. Removal of Paper Guide Plates and Cover Plates

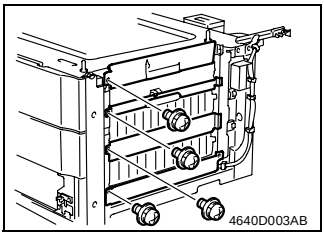

1. Remove two screws and the Lower Right Door.
2. Remove one screw each and take off the Paper Guide Plate and Cover Plate of each drawer.

1-4. Removal of Paper Separator Roll Assy from Drawer

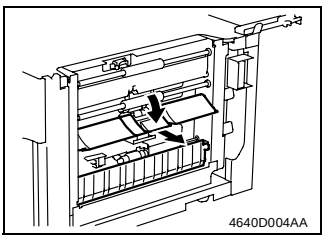

1. Slide out the drawer.
2. Remove two screws and the Lower Right Door.
3. Remove the Paper Guide Plate and Cover Plate from each drawer.
4. Rotate the Separator Roll/Paper Guide Plate 90° in the direction of the arrow and remove the assy.

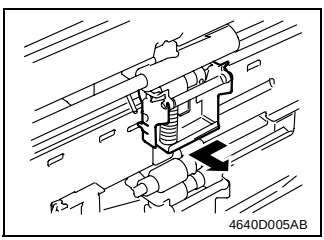

5. Loosen one screw and remove the Separator Roll Mounting Bracket Assy from the drawer.

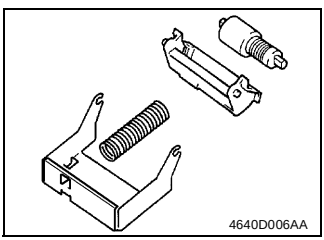

6. Unhook a spring and remove a holder from the Separator Roll Mounting Bracket Assy.
7. Remove the Separator Roll Assy from the holder.

1-5. Removal of Paper Take-Up Roll/Feed Roll Assy from Drawer

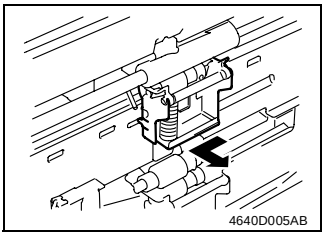

1. Slide out the drawer.
2. Remove two screws and the Lower Right Door.
3. Remove the Paper Guide Plate and Cover Plate from each drawer.
4. Rotate the Separator Roll/Paper Guide Plate 90° in the direction of the arrow and remove the assy.
5. Loosen one screw and remove the Separator Roll Mounting Bracket Assy from the drawer.

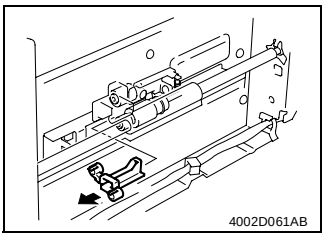

6. Unbending the hook, remove the holder from the Paper Take-Up Roll/Feed Roll Assy of the drawer.

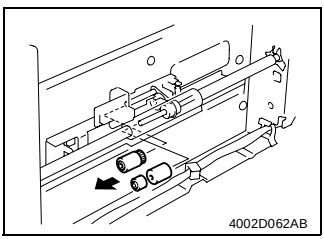

7. Remove the Paper Take-Up Roll and Feed Roll.

1-6. Removal of Paper Take-Up Motor from Drawer

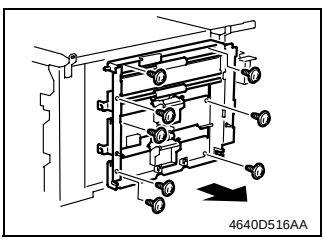

1. Remove the Toner Collecting Bottle Cover, Cover D, and Lower Right Door.
2. Remove the Paper Guide Plate and Cover Plate from each drawer.
3. Rotate the Separator Roll/Paper Guide Plate 90° in the direction of the arrow and remove the assy.
4. Remove eight screws, clamp, and the Vertical Transport Unit.

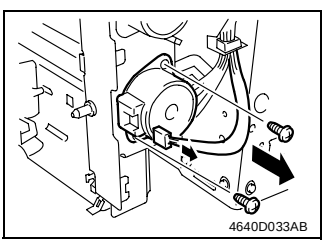

5. Unplug one connector and remove two screws and the Paper Take-Up Motor.

1-7. Cleaning of Separator Roll and Paper Take-Up Roll/Feed Roll.

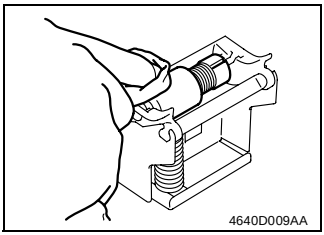

1. Slide out the drawer.
2. Remove the Paper Guide Plate and Cover Plate from each drawer.
3. Rotate the Separator Roll/Paper Guide Plate 90° in the direction of the arrow and remove the assy.
4. Remove the Separator Roll Mounting Bracket Assy from the drawer.
5. Using a soft cloth dampened with alcohol, wipe the surface of the Separator Roll clean of dirt.

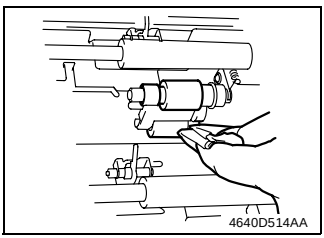

6. Using a soft cloth dampened with alcohol, wipe the surface of the Paper Take-Up Roll and Feed Roll clean of dirt.

1-8. Cleaning of Vertical Transport Rollers

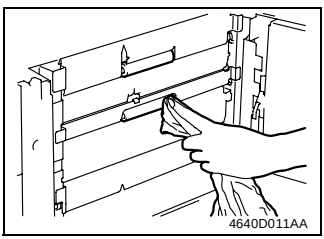

1. Open the Lower Right Door.
2. Using a soft cloth dampened with alcohol, wipe the surface of the Vertical Transport Rollers.

2. ADJUSTMENT

2-1. Adjustment 0f 3rd and 4th Drawer Reference Position

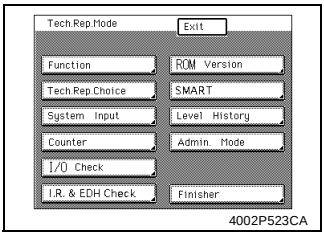

4002P523CA

1. Press the Utility key and touch “Meter Count.”
2. Press the following keys in this order to show the Tech. Rep. mode screen: Stop → 0 → 0 → Stop → 0 → 1.
3. Touch “Function.”

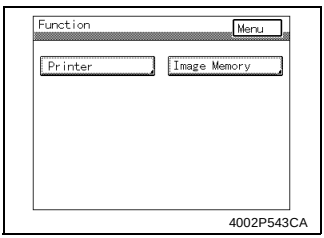

4002P543CA

4. Touch “Printer.”

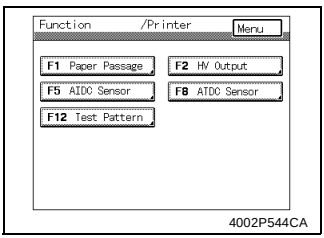

4002P544CA

5. Touch “F12 Test Pattern.”

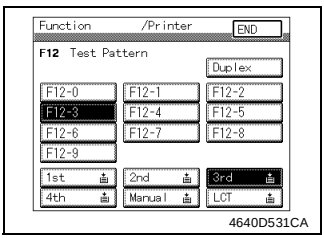

4640D531CA

6. Touch “F12-3.”
7. Touch “3rd” or “4th.”
8. Press the Start key and Stop key, in that order, to produce a test print.

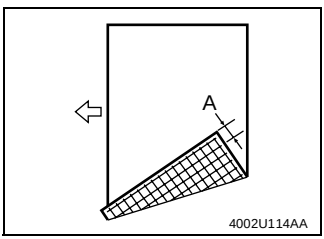

4002U114AA

9. Measure width A, which is the dimension between the leading edge and the second line, and check to see if it meets the specifications.

✻ Specifications: 8.5 ± 1.0 mm

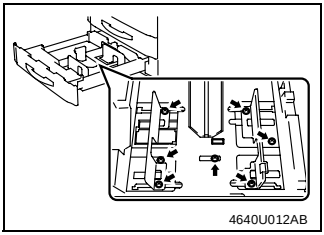

4640U012AB

10. If the measured width falls outside the specified range, perform the following steps to make an adjustment.
11. Slide out the drawer, remove the paper stack, and loosen seven screws in the drawer.

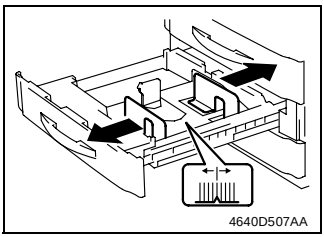

4640D507AA

12. Watching the scale on the adjustment plate in the drawer, move the Edge Guide.
- If width A on the test print is greater than the specifications, move the Edge Guide to the rear.
- If width A on the test print is smaller than the specifications, move the Edge Guide to the front.

13. Produce a test print again to make sure that the adjustment has been made properly.

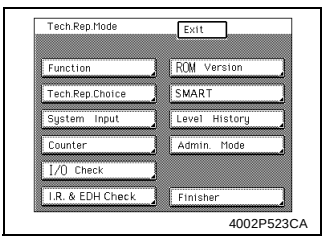

4002P523CA

14. Press the Panel Reset key and call the Tech. Rep. Mode menu to the Touch Panel.
15. Press the Stop key and then Start key to show the Adjust screen.

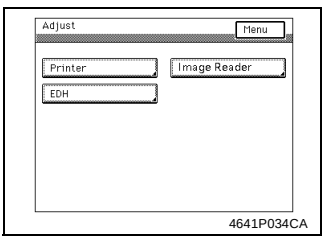

4641P034CA

16. Touch “Printer.”

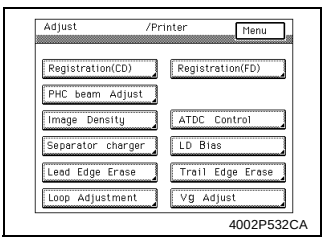

4002P532CA

17. Touch “Registration (CD).”

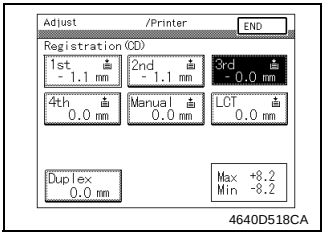

4640D518CA

18. Touch “3rd” or “4th.”
19. Press the Start key to produce a test print.

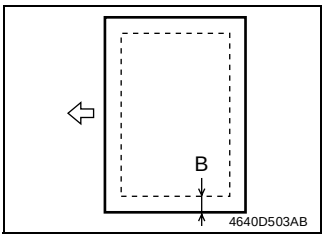

4640D503AB

20. Check to see if width B meets the specifications.
✻ Specifications: 5 ± 0.5 mm

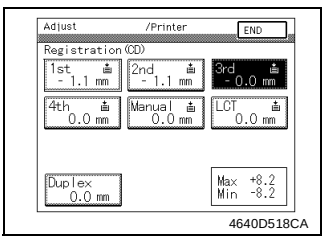

4640D518CA

21. If width B falls outside the specified range, press the Clear key and enter registration from the 10-Key Pad.
✻ Use the Access key to enter a “+” or “-” sign.
22. Produce a test print again and check for correct registration.

MISFEED DETECTION

1. MISFEED DETECTION

1-1. Location of Misfeed Detecting Sensors

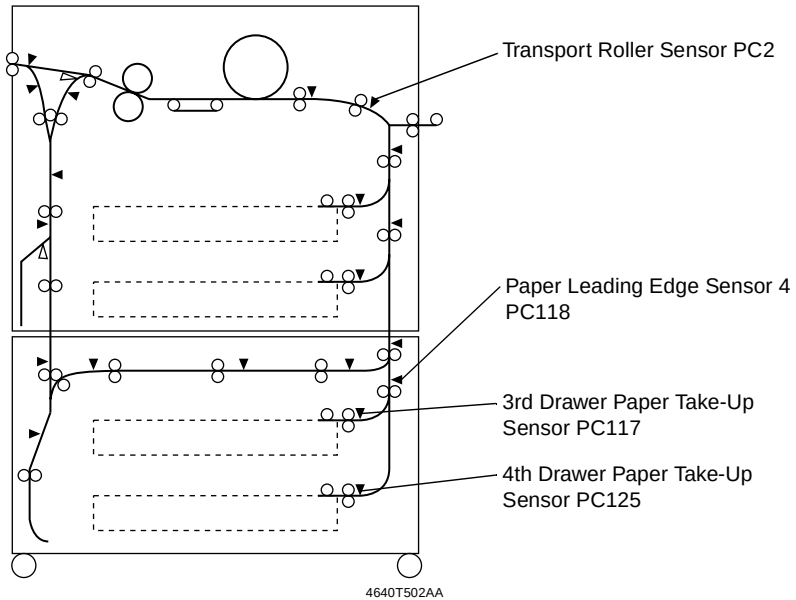

1-2. Misfeed Detection Timing

- The following lists the types of misfeed detection and detection timings for different misfeed locations within the Duplex Unit.
- The symbol “L” (for the leading edge) and “T” (for the trailing edge) given in ( ) indicate the particular edge of the paper detected by the sensor.

Type	Detection Start	Detection
Paper take-up failure	3rd Drawer Paper Take-Up Motor energized	3rd Drawer Paper Take-Up Sensor (L)
	4th Drawer Paper Take-Up Motor energized	4th Drawer Paper Take-Up Sensor (L)
Trailing edge detection by the Paper Take-Up Sensor, trailing edge detection by Paper Leading Edge Sensor	3rd Drawer Paper Take-Up Sensor (L)	3rd Drawer Paper Take-Up Sensor (T)
		Paper Leading Edge Sensor 4 (T)
	4th Drawer Paper Take-Up Sensor (L)	4th Drawer Paper Take-Up Sensor (T)
		Paper Leading Edge Sensor 4 (T)

Type	Detection Start	Detection
Leading edge detection by Paper Leading Edge Sensor 4	3rd Drawer Paper Take-Up Sensor (L)	Paper Leading Edge Sensor 4 (L)
	4th Drawer Paper Take-Up Sensor (L)	Paper Leading Edge Sensor 4 (L)
Leading edge detection by Transport Roller Sensor	Paper Leading Edge Sensor 4 (L)	Transport Roller Sensor (L)

2. MALFUNCTION DETECTION

Malfunction Code	Description	Detecting Timing
C0049	Vertical Transport Cooling Fan Motor malfunction	• The Motor Lock signal (H) is detected continuously even after the lapse of a given period of time after the motor has been energized.
C0900	3rd Drawer lifting motion failure	• The 3rd Drawer Paper Lift-Up Sensor does not detect the upper limit position even after the lapse of a given period of time after the motor has been energized. • The 3rd Drawer Paper Lift-Up Sensor does not detect the upper limit position even when the 3rd Drawer Lift-Up Motor Pulse Sensor detects a given number of lift-up pulses after the motor has been energized.
C0904	3rd Drawer Paper Lift-Up Motor malfunction	• The 3rd Drawer Lift-Up Motor Pulse Sensor detects no lift-up pulse edges even after the lapse of a given period of time after the motor has been energized.
C0950	4th Drawer lifting motion failure	• The 4th Drawer Paper Lift-Up Sensor does not detect the upper limit position even after the lapse of a given period of time after the motor has been energized. • The 4th Drawer Paper Lift-Up Sensor does not detect the upper limit position even when the 4th Drawer Lift-Up Motor Pulse Sensor detects a given number of lift-up pulses after the motor has been energized.
C0954	4th Drawer Paper Lift-Up Motor malfunction	• The 4th Drawer Lift-Up Motor Pulse Sensor detects no lift-up pulse edges even after the lapse of a given period of time after the motor has been energized.

PF-7D

SERVICE MANUAL

10794

CONTENTS

GENERAL, MECHANICAL/ELECTRICAL

1. SPECIFICATIONS M-1
2. COMPONENT IDENTIFICATION M-1
3. CROSS-SECTIONAL VIEW M-2
4. DRIVE SYSTEM COMPONENT LAYOUT M-2
5. ELECTRICAL PARTS LAYOUT M-3
6. TURNOVER SECTION M-4
   - 6-1. Drive Mechanism M-5
   - 6-2. Turnover Control M-6
     - (1) If Turnover Roller is separated from drive roller M-6
     - (2) If Turnover Roller is engaged with drive roller M-6
   - 6-3. Roller Separation Control M-7
   - 6-4. Duplex Paper Take-Up Priority Control M-7
7. DUPLEX UNIT M-8
8. VERTICAL TRANSPORT SECTION M-9
   - 8-1. Vertical Transport Drive Mechanism M-9
   - 8-2. Vertical Transport Motor Control M-9

DIS/REASSEMBLY, ADJUSTMENT

1. DISASSEMBLY D-1
   - 1-1. Maintenance Schedule D-1
   - 1-2. Removal of Exterior Parts D-2
   - 1-3. Cleaning of Vertical Transport Rollers D-3
   - 1-4. Removal of Duplex Unit D-3
   - 1-5. Cleaning of Turnover Rollers D-3
   - 1-6. Cleaning of Horizontal Transport Rollers D-3
2. ADJUSTMENT D-4
   - 2-1. Adjustment of Turnover Roller Retraction Solenoid Position D-4
   - 2-2. Adjustment of Duplex Unit Timing Belt D-4
   - 2-3. Adjustment of Duplex Unit Reference Position D-5

MISFEED DETECTION

1. MISFEED DETECTION T-1
   - 1-1. Location of Misfeed Detecting Sensors T-1
   - 1-2. Misfeed Detection Timing T-1
2. TYPES OF MALFUNCTION DETECTION AND DETECTION TIMING T-2

GENERAL, MECHANICAL/ELECTRICAL

1. SPECIFICATIONS

Type of Copy Paper	:	Plain and recycled paper
Paper Sizes	:	A5L to A3L, 5-1/2 × 8-1/2L to 11 × 17L
Paper Weight	:	60 to 90 g/m^2
Power Source	:	DC 24 V, DC 5 V (supplied from copier)
Dimensions	:	Width 664 mm or 26-1/4 in Depth 730 mm or 28-3/4 in Height 388 mm or 15-1/4 in
Weight	:	37.5 kg or 82-3/4 lbs.

2. COMPONENT IDENTIFICATION

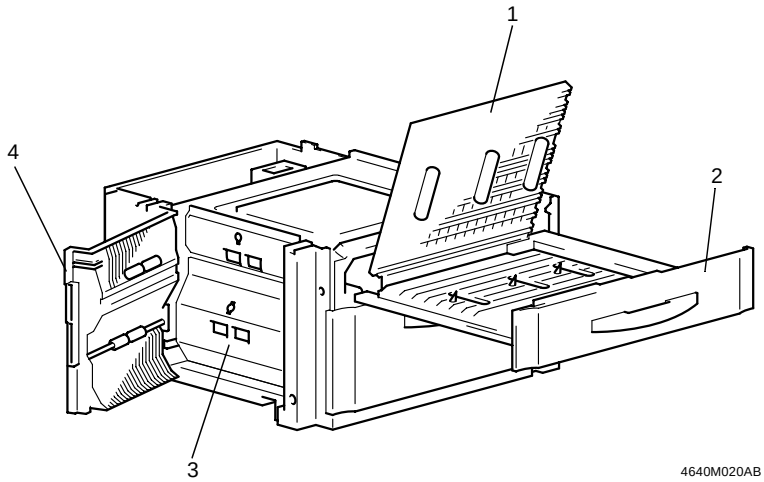

1. Upper Guide Plate Assy
2. Duplex Unit
3. Duplex Turnover Unit
4. Lower Left Door

3. CROSS-SECTIONAL VIEW

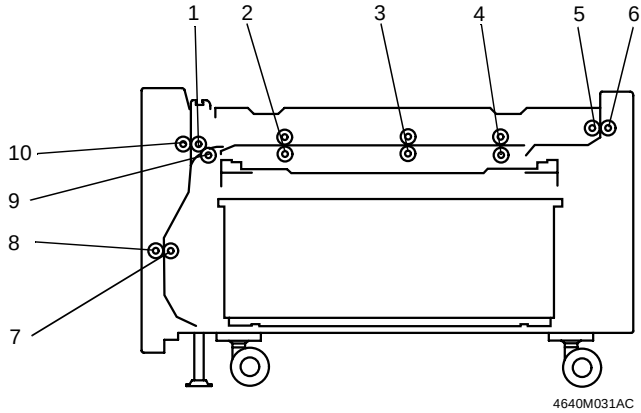

1. Horizontal Entry Transport Roller
2. Duplex Unit Horizontal Transport Roller 1
3. Duplex Unit Horizontal Transport Roller 2
4. Duplex Unit Horizontal Transport Roller 3
5. Vertical Transport Roller 2 (Drive)
6. Vertical Transport Roller 2 (Driven)
7. Paper Turnover Roller (Drive)
8. Paper Turnover Roller (Driven)
9. Roll B
10. Roll A

4. DRIVE SYSTEM COMPONENT LAYOUT

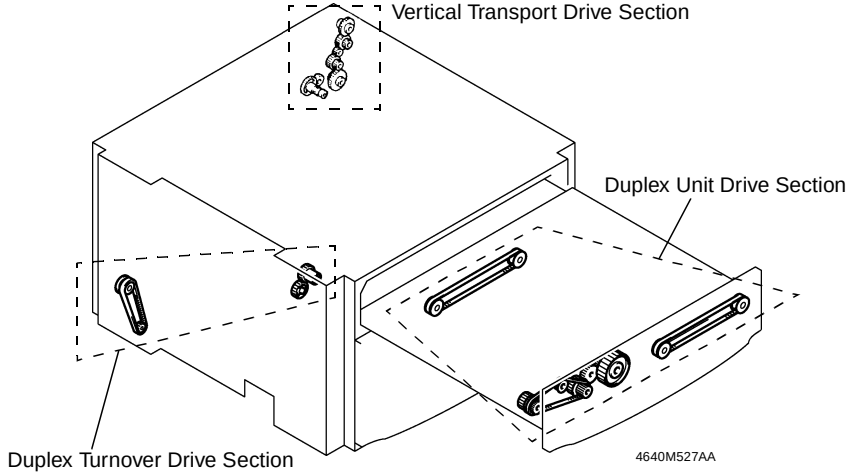

5. ELECTRICAL PARTS LAYOUT

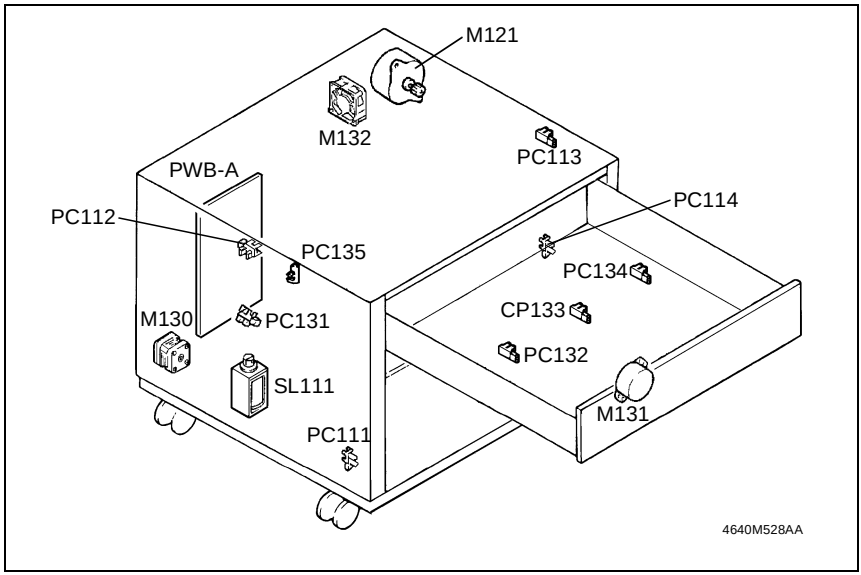

Symbol	Name	Symbol	Name
M121	Vertical Transport Motor	PC114	Lower Right Door Sensor
M130	Duplex Unit Turnover Motor	PC131	Turnover Feed Jam Sensor
M131	Horizontal Transport Motor	PC132	Horizontal Transport Entry Sensor
M132	Vertical Transport Cooling Fan Motor	PC133	Horizontal Transport Jam Sensor
		PC134	Horizontal Transport Exit Sensor
PC111	Turnover Door Sensor	PC135	Toner Collecting Bottle Set Sensor
PC112	Duplex Unit Turnover Entry Sensor	SL111	Turnover Roller Retraction Solenoid
PC113	Paper Leading Edge Sensor 3	PWB-A	Control Board

6. TURNOVER SECTION

The turnover unit reverses the copy fed from the Exit/Turnover Switching Unit and feeds it into the Duplex Unit.

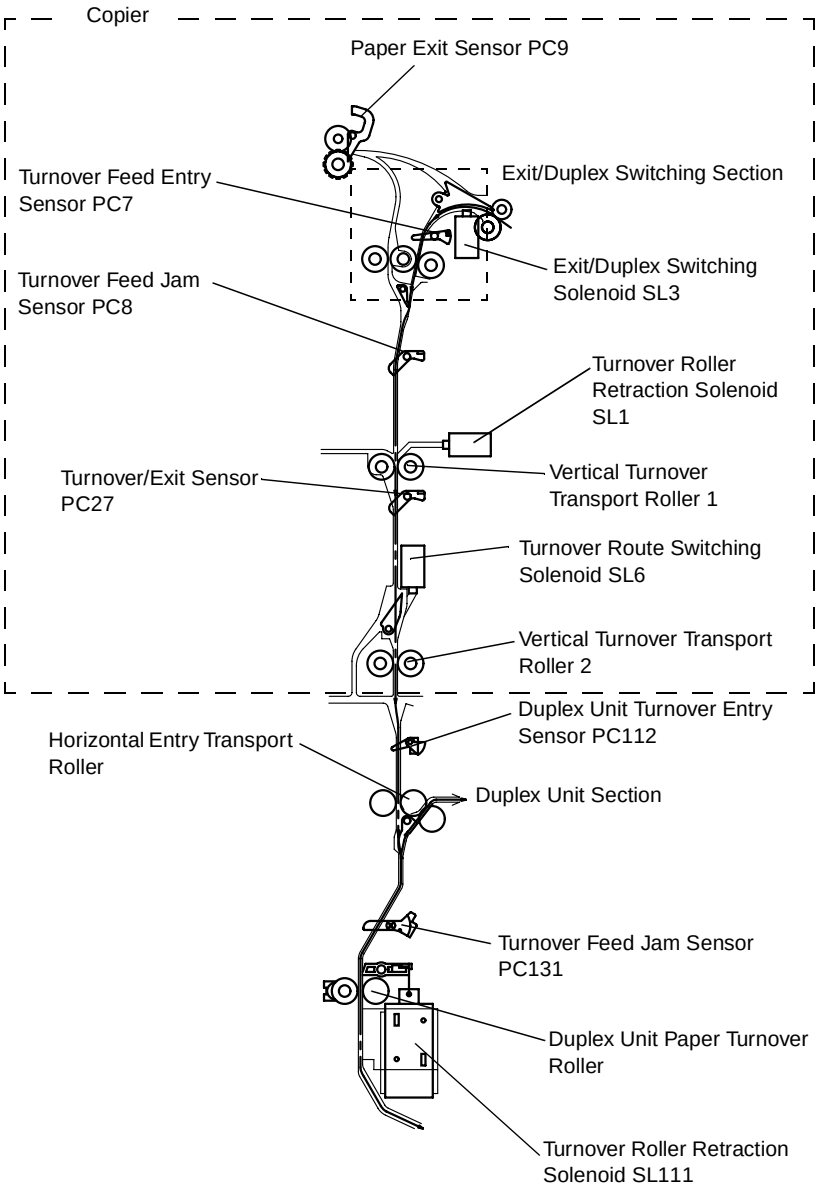

6-1. Drive Mechanism

- The Turnover Unit is driven by a motor.

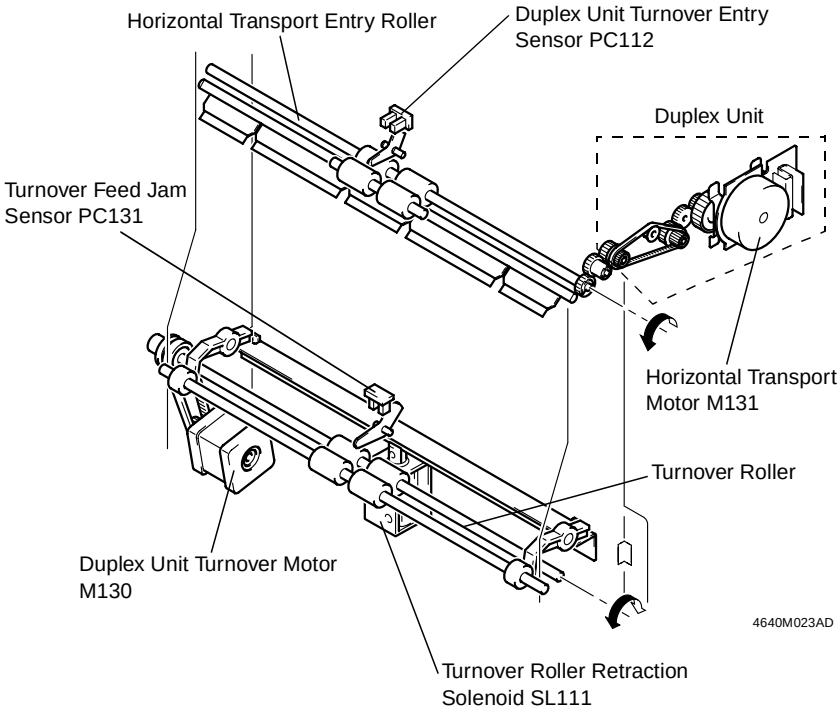

6-2. Turnover Control

- The paper transport direction is selected by turning the motor forward or backward.
- A sensor on the paper path is used to determine the timing at which the direction of motor rotation is switched from backward to forward, or vice versa.

(1) If Turnover Roller is separated from drive roller

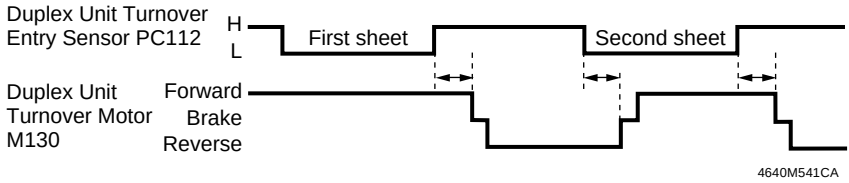

(2) If Turnover Roller is engaged with drive roller

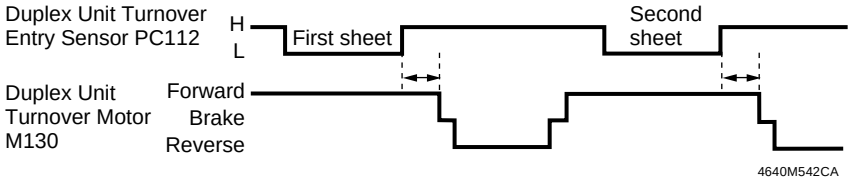

6-3. Roller Separation Control

- The Turnover Drive Roller is temporarily separated from the Turnover Driven Roller in the event that, during a multi-copy cycle using large-sized paper, the leading edge of the subsequent paper reaches the Turnover Drive/Driven Rollers before the trailing edge of the preceding paper moves past them.
- The Turnover Drive/Driven Rollers are separated from each other by energizing and deenergizing the Turnover Roller Separation Solenoid.

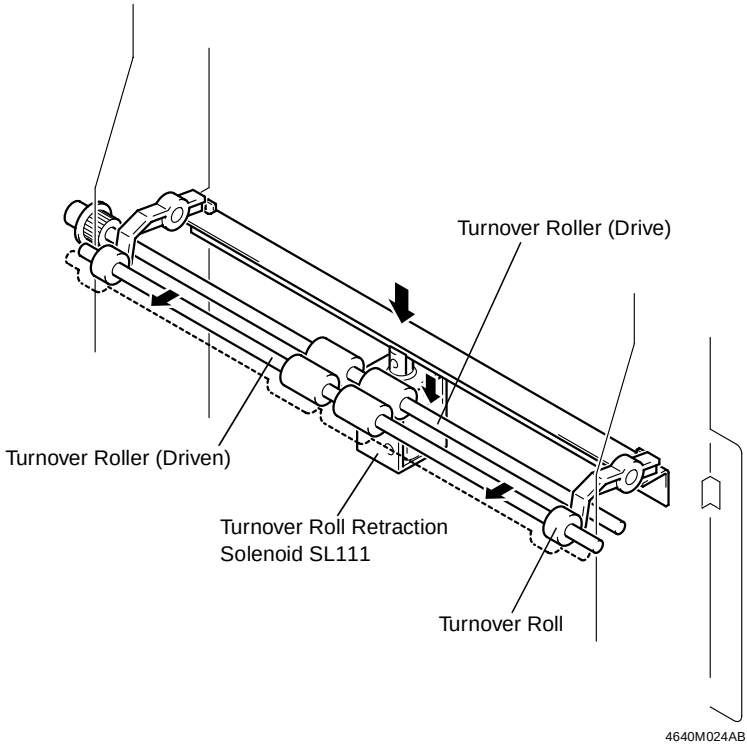

6-4. Duplex Paper Take-Up Priority Control

- A circulation system is employed to enhance productivity in making copies. When there are a given number of 1-sided copies (up to seven A4 crosswise copies) present on the paper path, the paper take-up sequence for copying of the front side is stopped and the copy cycle for the second side of the original is started. When all the 1-sided copies on the paper path have been subjected to the second copy cycle, the copier starts a sequence to make new 1-sided copies. This sequence of operations is repeated.

7. DUPLEX UNIT

- The Duplex Unit transports the paper fed from the Turnover Unit back into the copier.
- The Duplex Unit is driven by a motor.

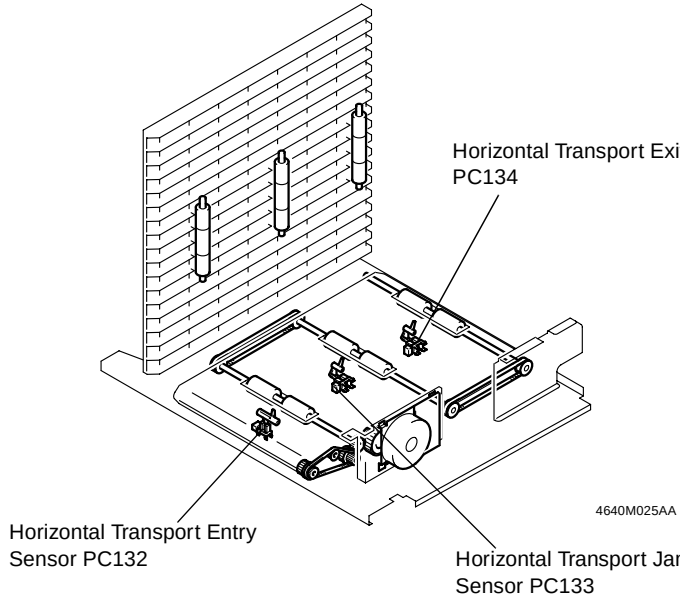

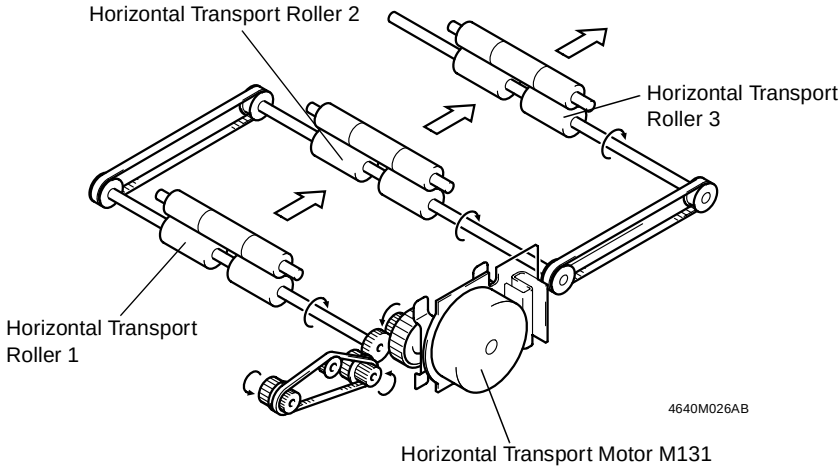

8. VERTICAL TRANSPORT SECTION

8-1. Vertical Transport Drive Mechanism

A motor drives the Vertical Transport Rollers.

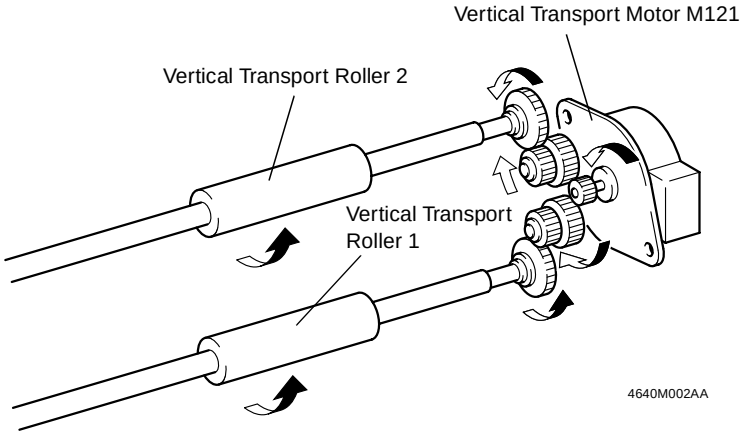

8-2. Vertical Transport Motor Control

The Vertical Transport Motor is controlled by the signal output from the Control Board.

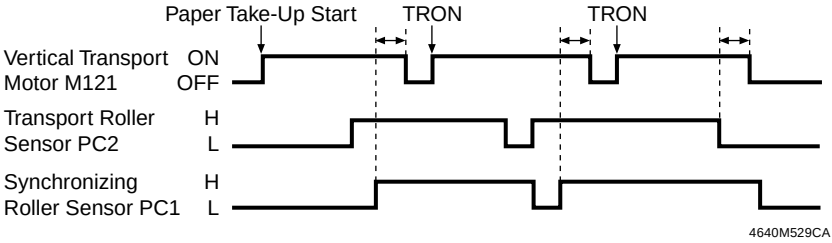

DIS/REASSEMBLY, ADJUSTMENT

1. DISASSEMBLY

1-1. Maintenance Schedule

- To ensure good copies and an extended service life of the Duplex Unit, it is recommended that the maintenance jobs described in this schedule be carried out.

PM Parts	Maintenance Schedule Cycle (K)		Tools Used for Cleaning	Parts No.	QTY	PM Counter	Reference Page
	Clean	Replace					
Vertical Transport Roller (Drive)	80/100	–	Cloth, alcohol	–	1	Cleaning 1	☞ D-3
Vertical Transport Roller (Driven)				–	4		
Turnover Roller (Drive)	80/100	–		–	2	Cleaning 1	☞ D-3
Turnover Roller (Driven)				–	2		
Horizontal Transport Roller (Drive)	80/100	–		–	3	Cleaning 1	☞ D-3
Horizontal Transport Roller (Driven)				–	12		

K = 1,000 copies

✻ Perform the service job based on the values of the PM Counter of the copier.

✻ The above information is subject to change without notice.

✻ The above maintenance schedule is for the 45/55-cpm copier.

1-2. Removal of Exterior Parts

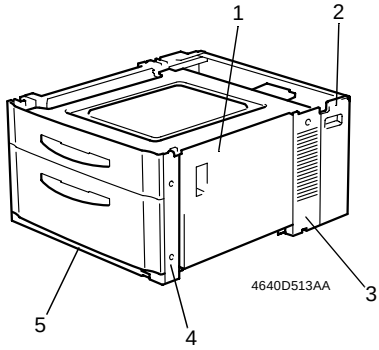

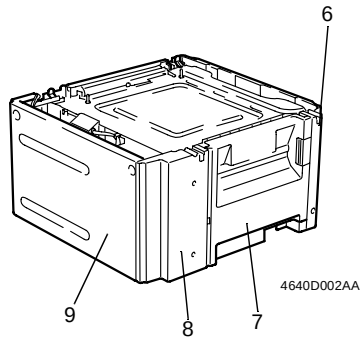

No.	Parts Name	Exterior Parts Removal Procedure
1	Lower Right Door	Remove two screws and take off the cover.
2	Toner Collecting Bottle Cover	Open to an angle of about 45°, then take off the cover.
3	Cover D	After the Toner Collecting Bottle Cover has been removed, remove one screw and take off the cover.
4	Cover A	Slide out the drawer, remove two screws, and take off the cover.
5	Lower Front Cover	After Cover A and Cover B have been removed, remove two screws and take off the cover.
6	Cover B	Remove two screws and take off the cover.
7	Lower Left Door	Open the Lower Left Door and lift it upward.
8	Cover C	After the Lower Left Door has been removed, remove two screws and take off the cover.
9	Rear Cover	Open the Toner Collecting Bottle Cover and remove the Toner Collecting Bottle; then remove two screws and take off the cover.

1-3. Cleaning of Vertical Transport Rollers

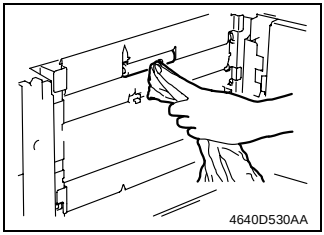

1. Open the Lower Right Door.
2. Using a soft cloth dampened with alcohol, wipe the surfaces of the Vertical Transport Rollers clean of dirt.

1-4. Removal of Duplex Unit

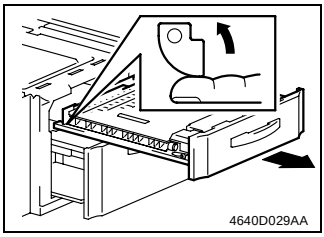

1. Slide out the 3rd Drawer.
2. Slide out the Duplex Unit. Then, push up the stopper, slightly lift up the Duplex Unit, and take it off.

1-5. Cleaning of Turnover Rollers

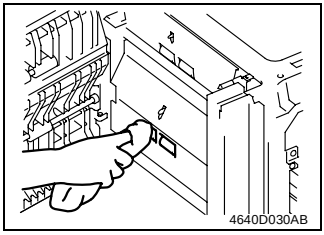

1. Open the Lower Left Door.
2. Using a soft cloth dampened with alcohol, wipe the surfaces of the Turnover Rollers clean of dirt.

1-6. Cleaning of Horizontal Transport Rollers

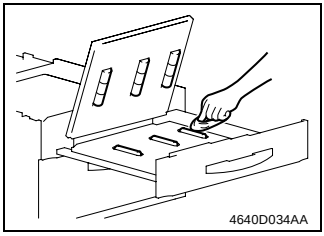

1. Slide out the Duplex Unit.
2. Swing up the Upper Guide Plate Assy.
3. Using a soft cloth dampened with alcohol, wipe the Horizontal Transport Rollers clean of dirt.

2. ADJUSTMENT

2-1. Adjustment of Turnover Roller Retraction Solenoid Position

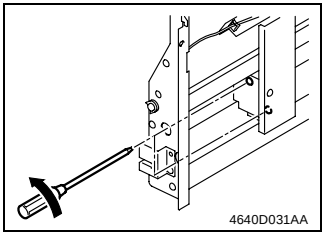

1. Remove four screws, unplug two connectors, and remove the Turnover Section Assy.
2. Loosen the two screws that secure the solenoid in position.

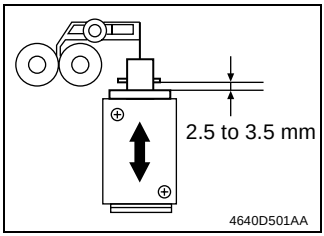

3. Find a position of the solenoid so that the clearance between the plunger E-ring and solenoid body measures 2.5 to 3.5 mm when the solenoid is in the deenergized position.
4. When a good position is found, tighten the two screws to secure the solenoid in position.

2-2. Adjustment of Duplex Unit Timing Belt

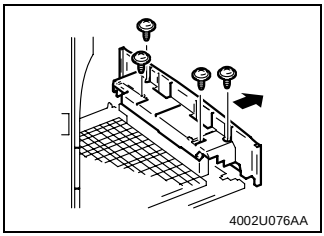

1. Slide out the Duplex Unit. Pushing up the stopper, take off the Duplex Unit.
2. Remove the four screws and the Duplex Unit Front Cover.

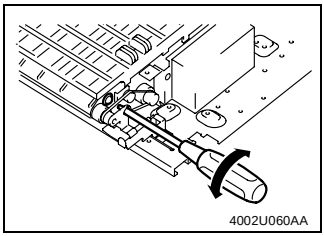

3. Loosen one screw and adjust tension in the timing belt. Then tighten the screw.

2-3. Adjustment of Duplex Unit Reference Position

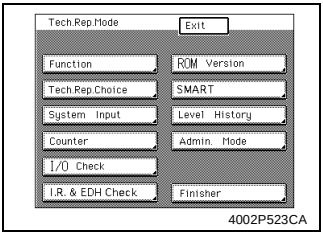

4002P523CA

1. Press the Utility key and touch “Meter Count.”
2. Press the following keys in this order to show the Tech. Rep. mode screen: Stop → 0 → 0 → Stop → 0 → 1.
3. Touch “Function.”

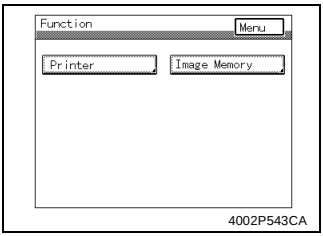

4002P543CA

4. Touch “Printer.”

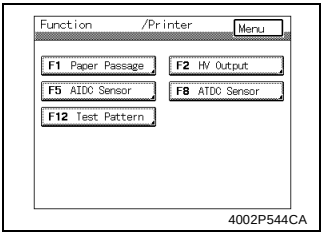

4002P544CA

5. Touch “F12 Test Pattern.”

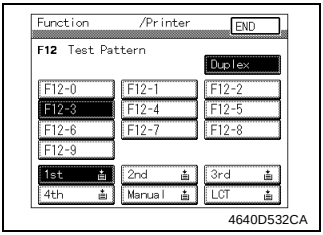

4640D532CA

6. Touch “F12-3.”
7. Touch “1st.”
8. Touch “Duplex.”
9. Press the Start key and Stop key, in that order, to produce a test print.

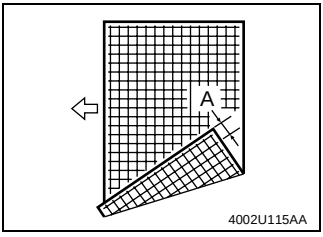

4002U115AA

10. On the second side (that faces down) of the test print, measure width A, which is the dimension between its leading edge and the second line, and check to see if it meets the specifications.

✻ Specifications: 8.5 ± 1.0 mm

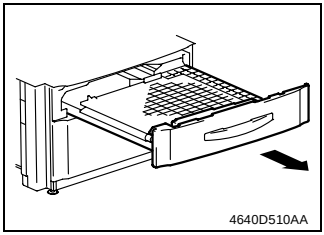

11. If the measured width falls outside the specified range, perform the following steps to make an adjustment.
12. Slide out the Duplex Unit.

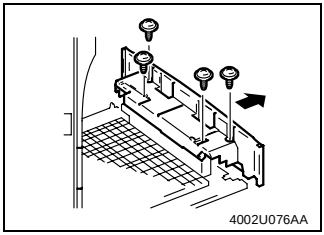

13. Remove four screws and the Duplex Unit Front Cover.

14. Loosen the four screws shown in the illustrations below.

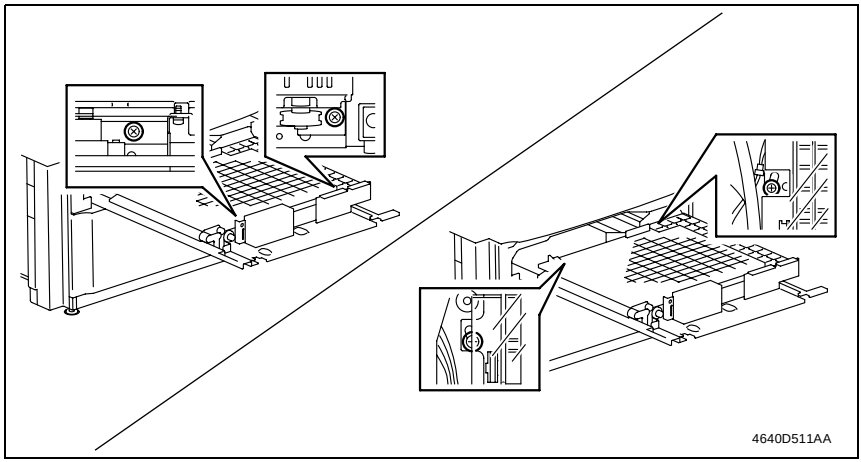

15. Watching the scale on the adjustment plate in the drawer, move the Upper Guide Plate Assy.

- If width A on the test print is greater than the specifications, move the Upper Guide Plate Assy to the left.
- If width A on the test print is smaller than the specifications, move the Upper Guide Plate Assy to the right.

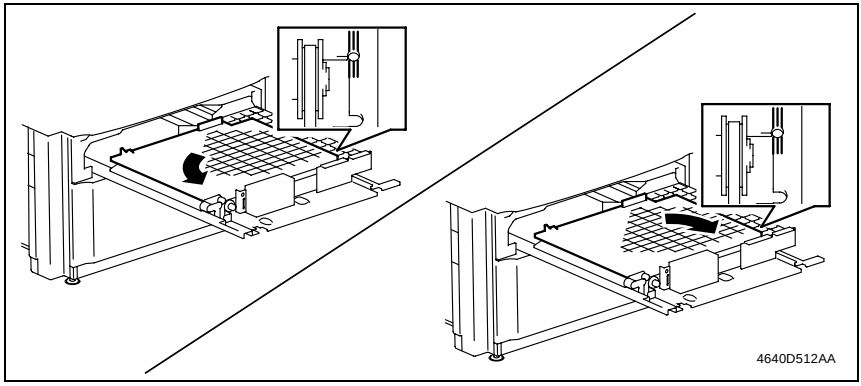

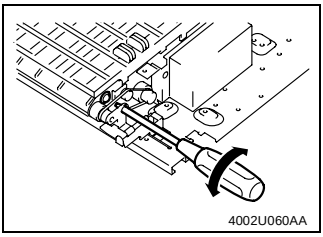

16. Loosen one screw and adjust tension in the timing belt. Then tighten the screw.
17. Produce a test print again to make sure that the adjustment has been made properly.

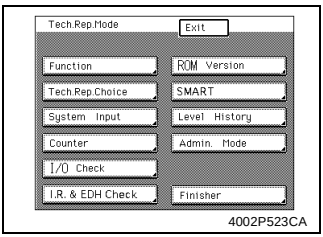

18. Press the Panel Reset key and call the Tech. Rep. Mode menu to the Touch Panel.
19. Press the Stop key and then Start key to show the Adjust screen.

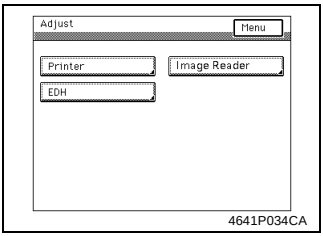

20. Touch “Printer.”

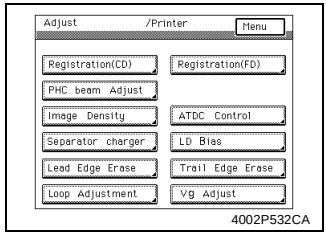

4002P532CA

21. Touch “Registration (CD).”

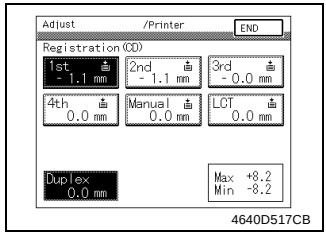

4640D517CB

22. Touch “1st.”
23. Touch “Duplex.”
24. Press the Start key to produce a test print.

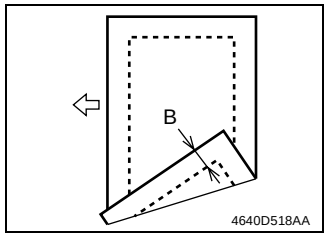

4640D518AA

25. Check to see if width B on the second side (that faces down) of the test print meets the specifications.

✻ Specifications: 5 ± 0.5 mm

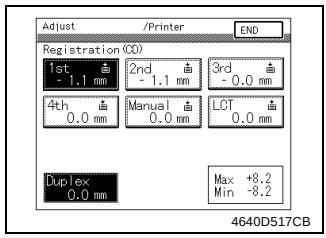

4640D517CB

26. If width B falls outside the specified range, press the Clear key and enter registration from the 10-Key Pad.

✻ Use the Access key to enter a “+” or “-” sign.

27. Produce a test print again and check for correct registration.

MISFEED DETECTION

1. MISFEED DETECTION

1-1. Location of Misfeed Detecting Sensors

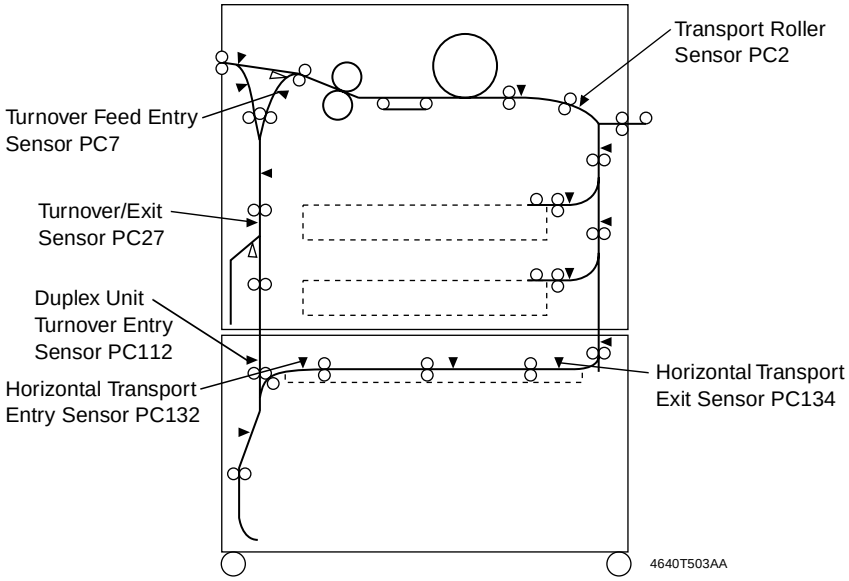

1-2. Misfeed Detection Timing

- The following lists the types of misfeed detection and detection timings for different misfeed locations within the Duplex Unit.
- The symbol “L” (for the leading edge) and “T” (for the trailing edge) given in ( ) indicate the particular edge of the paper detected by the sensor.

Type	Detection Start	Detection
Leading edge detection by Turnover Feed Entry Sensor	Horizontal Transport Exit Sensor (L)	Transport Roller Sensor (L)
Leading edge detection by Turnover/Exit Sensor	Turnover Feed Entry Sensor (T)	Turnover/Exit Sensor (L)
Leading edge detection by Duplex Unit Turnover Entry Sensor	Turnover/Exit Sensor (L)	Duplex Unit Turnover Entry Sensor (L)
Trailing edge detection by Duplex Unit Turnover Entry Sensor	Turnover/Exit Sensor (T)	Duplex Unit Turnover Entry Sensor (T)
Leading edge detection by Horizontal Transport Entry Sensor	Duplex Unit Turnover Entry Sensor (T)	Horizontal Transport Entry Sensor (L)
Leading edge detection by Horizontal Transport Exit Sensor	Horizontal Transport Entry Sensor (L)	Horizontal Transport Exit Sensor (L)

2. TYPES OF MALFUNCTION DETECTION AND DETECTION TIMING

Malfunction Code	Description	Detecting Timing
C0D50	Horizontal Transport Motor's failure to turn	• The Motor Lock signal (H) is detected for a continuous given period of time after the Horizontal Transport Motor has been energized. • The Motor Lock signal (L) is detected for a continuous given period of time after the Horizontal Transport Motor has been deenergized.

C-306/C-306L

SERVICE MANUAL

10794

CONTENTS

GENERAL, MECHANICAL/ELECTRICAL

1. SPECIFICATIONS M-1
2. COMPONENT IDENTIFICATION M-2
3. CROSS-SECTIONAL VIEW M-3
4. DRIVE SYSTEM COMPONENT LAYOUT M-3
5. ELECTRICAL COMPONENT LAYOUT M-4
6. PAPER PLATE DRIVE SECTION M-5
   - 6-1. Paper Plate Lifting Mechanism M-5
     - (1) Paper Plate Ascent/Descent Conditions M-5
     - (2) Operation during Paper Plate Ascent/Descent Motion M-6
   - 6-2. Paper Top Level Correction Mechanism M-7
   - 6-3. Elevator Motor Control M-7
   - 6-4. Paper Supply Level Detection M-8
7. PAPER TAKE-UP AND FEEDING SECTION M-9
   - 7-1. Paper Take-Up Mechanism M-9
   - 7-2. Paper Separating Mechanism M-9
   - 7-3. Double Feed Paper Take-Up Control M-10
   - 7-4. Paper Take-Up Interval Control M-10
   - 7-5. Paper Take-Up Motor Control M-10
   - 7-6. Paper Retry Control M-11
   - 7-7. Paper Empty Detecting Mechanism M-11
   - 7-8. LCT-in-Locked-Position Detection System M-12
   - 7-9. Paper Dehumidifier Heaters (Option) M-12

DIS/REASSEMBLY, ADJUSTMENT

1. DISASSEMBLY D-1
   - 1-1. Maintenance Schedule D-1
   - 1-2. Removal of the Paper Take-Up Roll and Paper Feed Roll D-2
   - 1-3. Removal of the Paper Separator Roll Assy D-3
2. ADJUSTMENT D-4
   - 2-1. Adjustment of Paper Registration D-4
3. MISCELLANEOUS D-7
   - 3-1. Conversion of Paper Size D-7
     - (1) C-306 ..... D-7
     - (2) C-306L D-9

MISFEED DETECTION

1. MISFEED DETECTION T-1
   - 1-1. I/O Check T-1
   - 1-2. Misfeed Detection Timings T-1
   - 1-3. Misfeed Troubleshooting Procedures T-2
     - (1) Misfeed occurring before a copy cycle is started T-2
     - (2) Misfeed occurring after a copy cycle has been started T-2
2. MALFUNCTION DETECTION T-3
   - 2-1. Types of Malfunction Detection and Detection Timing T-3
   - 2-2. Malfunction Troubleshooting Procedures T-4

(1) Ascent T-4
(2) Descent T-4

GENERAL, MECHANICAL/ELECTRICAL

1. SPECIFICATIONS

- C-306

Type	:	Large Capacity Tray C-306
Installation	:	Fixed to the copier using a dedicated Base with Slide Rails
Type of Paper	:	Plain paper, recycled paper
Size of Paper	:	A4C, B5C, 11 × 8-1/2C
Paper Weight	:	60 to 90 g/m^2
Position of Feed	:	Center
Capacity	:	Inch Area: 3,400 sheets (when paper weighing 20 lbs is used) Metric Area: 3,000 sheets (when paper weighing 80 g/m^2 is used)
Power Supply	:	DC 24 V, 5 V (supplied from the copier)
Power Consumption	:	50 W or less (including 20 W of Paper Dehumidifying Heater)
Dimensions	:	Width 287 mm or 11-1/4 in Depth 446 mm or 17-1/2 in Height 491 mm or 19-1/4 in
Weight	:	14.2 kg or 31-1/4 lbs.

- C-306L

Type	:	Large Capacity Tray C-306L
Installation	:	Fixed to the copier using a dedicated Base with Slide Rails
Type of Paper	:	Plain paper, recycled paper
Size of Paper	:	A4L, A4C, B5C, 11 × 8-1/2C, 11 × 8-1/2L, 14 × 8-1/2L
Paper Weight	:	60 to 90 g/m^2
Position of Feed	:	Center
Capacity	:	Inch Area: 3,400 sheets (when paper weighing 20 lbs is used) Metric Area: 3,000 sheets (when paper weighing 80 g/m^2 is used)
Power Supply	:	DC 24 V, 5 V (supplied from the copier)
Power Consumption	:	60 W or less (including 20 W of Paper Dehumidifying Heater)
Dimensions	:	Width 440 mm or 17-1/4 in Depth 446 mm or 17-1/2 in Height 491 mm or 19-1/4 in
Weight	:	15.2 kg or 33-1/2 lbs.

2. COMPONENT IDENTIFICATION

• C-306

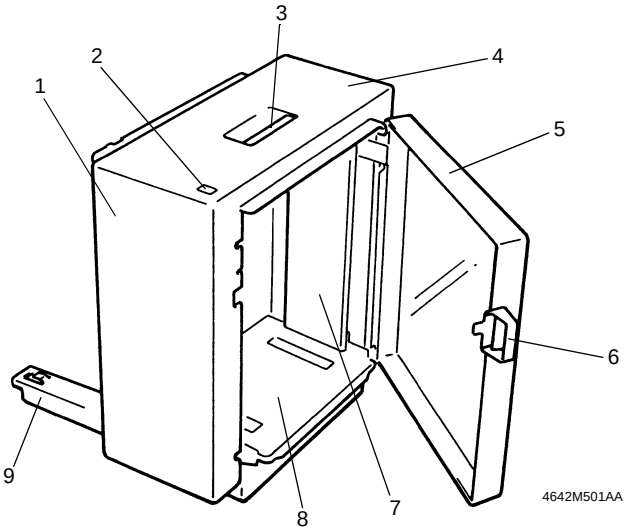

• C-306L

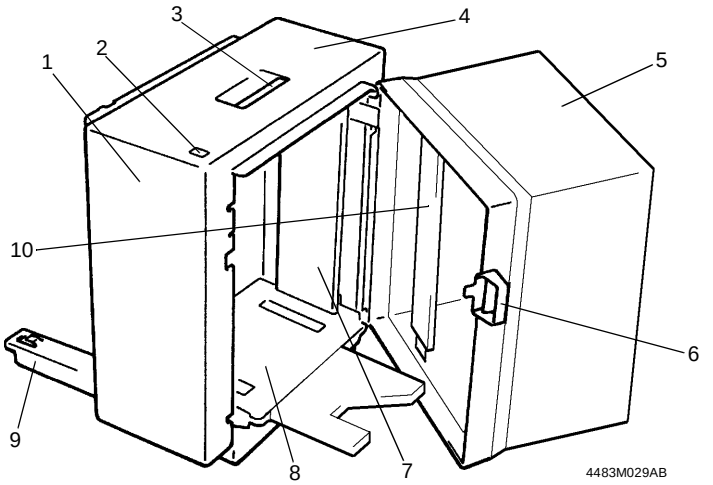

1. Front Cover
2. Paper Plate Descent Switch (S1B)
3. Tray Unlocking Lever
4. Top Cover
5. Door Unlocking Lever
6. Door Unlocking Lever
7. Edge Guide
8. Paper Plate
9. Support Base
10. Paper Stop Bar

3. CROSS-SECTIONAL VIEW

✻ The illustration represents C-306 and is applicable also to C-306L.

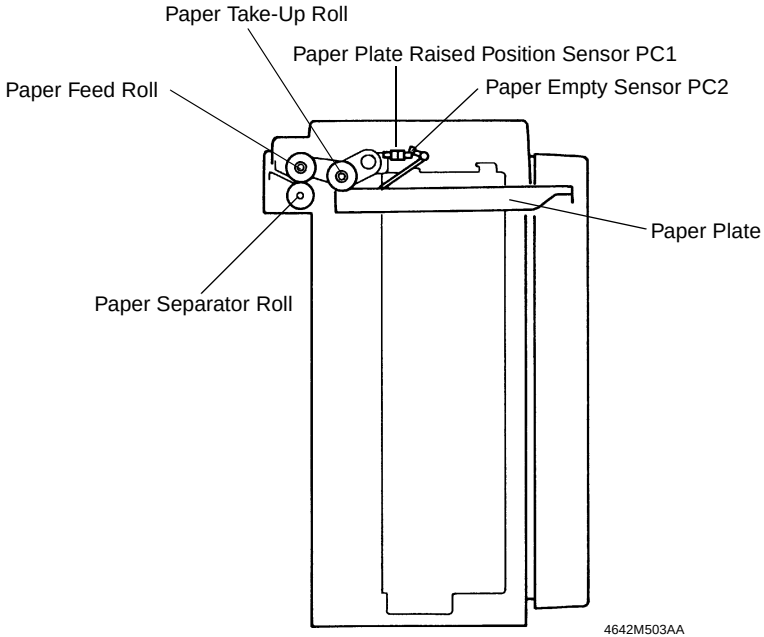

4. DRIVE SYSTEM COMPONENT LAYOUT

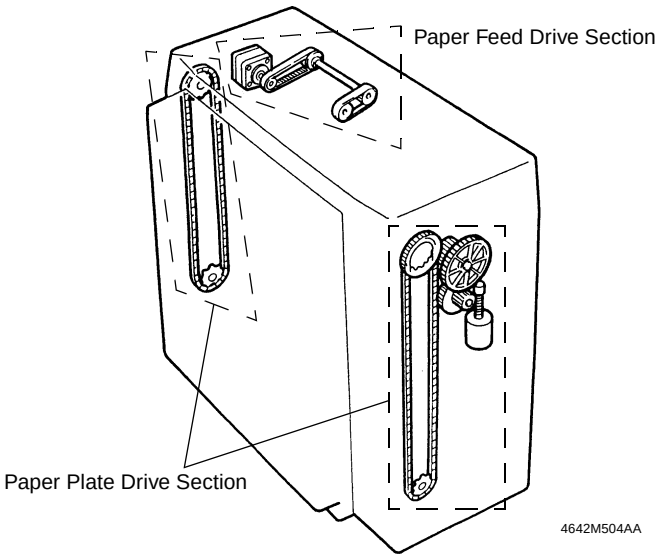

5. ELECTRICAL COMPONENT LAYOUT

✻ The illustration represents C-306 and is applicable also to C-306L.

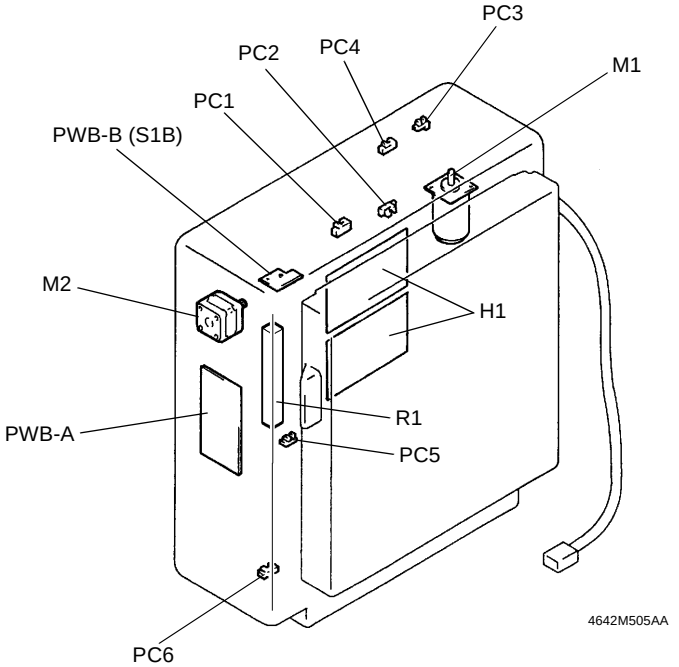

Symbol	Name	Symbol	Name
PWB-A	Drive Control Board	PC1	Paper Plate Raised Position Sensor
PWB-B	Paper Plate Descent Key Board	PC2	Paper Empty Sensor
S1B	Paper Plate Descent Key	PC3	Set Sensor
M1	Elevator Motor	PC4	Paper Take-Up Sensor
M2	Paper Take-Up Motor	PC5	Cassette Door Sensor
H1	Paper Dehumidifying Heater (Option)	PC6	Paper Plate Lowered Position Sensor
		R1	Paper Supply Level Resistor

6. PAPER PLATE DRIVE SECTION

6-1. Paper Plate Lifting Mechanism

- The Paper Plate is moved up and down by the chains mounted on the front and rear ends of the C-306, driven by the Elevator Motor.

(1) Paper Plate Ascent/Descent Conditions

- Ascent conditions
  1. The Cassette Door is closed (the Paper Plate Raised Position Sensor is unblocked).
  2. The Paper Plate Raised Position Sensor is unblocked during paper take-up operation (paper top level correction).
- Ascent stop conditions
  1. The Cassette Door is opened.
  2. The Paper Plate Raised Position Sensor is blocked.
  3. The Paper Plate Descent key is pressed. (The Paper Plate starts lowering after a stop.)
- Descent conditions
  1. A paper-empty condition is detected.
  2. The Paper Plate Descent key is pressed.

  With the Stacker Door closed
- Descent stop conditions
  1. The Cassette Door is opened.
  2. The Paper Plate Lowered Position Sensor is blocked.
  3. The Paper Plate Descent key is pressed.

(2) Operation during Paper Plate Ascent/Descent Motion

- Ascent

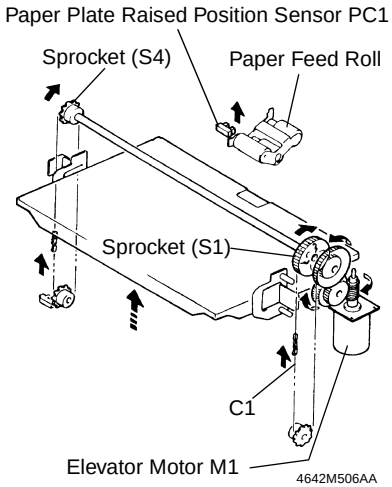

The Paper Plate ascent conditions are met.
↓
The Elevator Motor turns forward.
↓
Sprocket S1 turns.
↓
Sprocket S4 turns.
↓
Chains C1 and C2 are driven.
↓
The Paper Plate ascends.
↓
The Paper Take-Up Roll is pushed up by the Paper Plate.
↓
The Paper Plate Raised Position Sensor is blocked.
↓
The Elevator Motor is deenergized.

- Descent

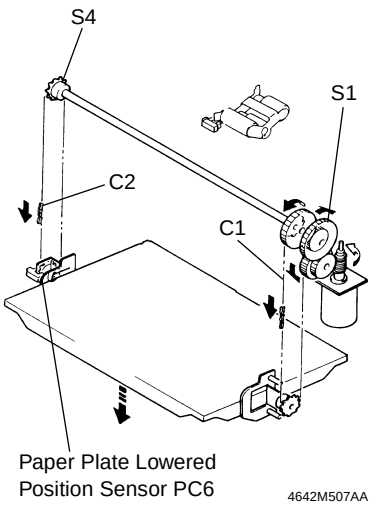

The Paper Plate descent conditions are met.
↓
The Elevator Motor turns backward.
↓
Sprocket S1 turns.
↓
Sprocket S4 turns.
↓
Chains C1 and C2 are driven.
↓
The Paper Plate descends.
↓
The Paper Plate Lowered Position Sensor is blocked.
↓
The Elevator Motor is deenergized and the Paper Plate stops

6-2. Paper Top Level Correction Mechanism

- The paper top level correction mechanism employs the Elevator Motor that presses the paper stack in the LCT at a given pressure up against the Paper Take-Up Roll, thereby ensuring positive paper take-up and feeding.

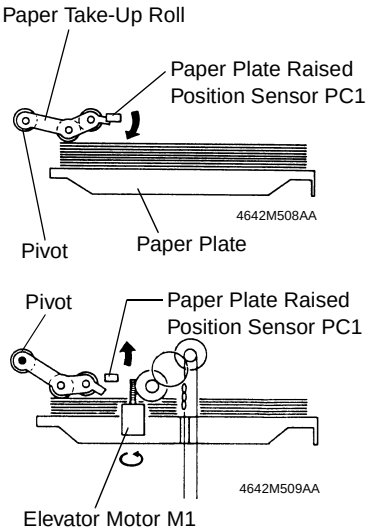

As sheets of paper are taken up, the top level of the paper

↓

The Paper Plate Raised Position Sensor is unblocked.

↓

The Elevator Motor turns forward. The Paper Plate ascends causing the paper stack to push up the Paper Take-Up Roll.

↓

The Paper Plate Raised Position Sensor is blocked.

↓

The Elevator Motor stops turning.

↓

End of Paper Top Level Correction.

6-3. Elevator Motor Control

The Elevator Motor is controlled by the signal output from the Drive Control Board.

Elevator Motor	Paper Plate	PJ5A-1	PJ5A-3
Forward rotation	Ascent	DC 24 V	DC 0 V
Backward rotation	Descent	DC 0 V	DC 24 V
Stop	–	DC 0 V	DC 0 V

6-4. Paper Supply Level Detection

- The paper level of the LCT is detected and the corresponding paper supply level is displayed on the copier control panel.
- The Paper Supply Level Resistor, located on the Elevator section at the front of the LCT, outputs a voltage value corresponding to the paper level and that voltage is in turn input to the IC on the Drive Control Board.

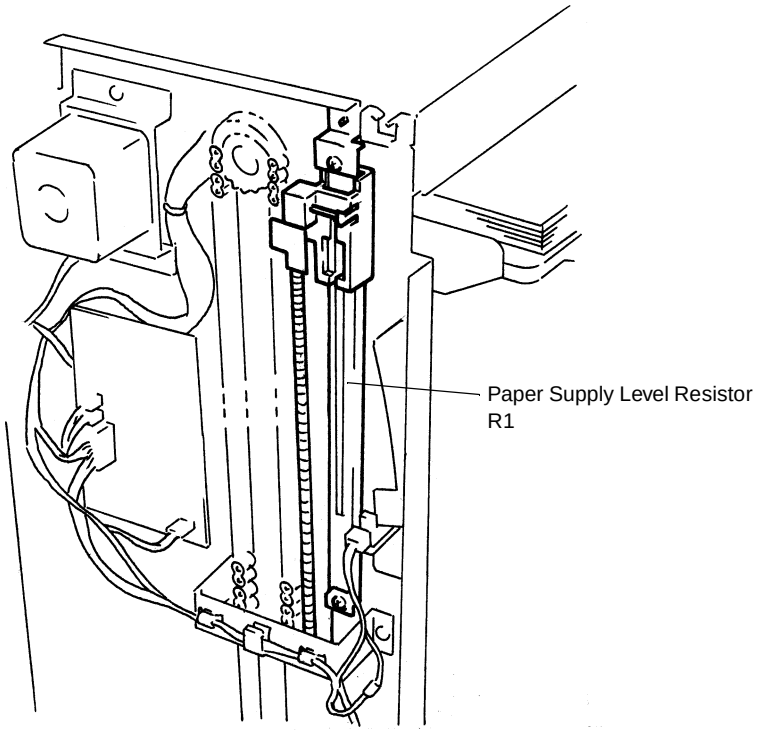

7. PAPER TAKE-UP AND FEEDING SECTION

7-1. Paper Take-Up Mechanism

- Drive for the paper take-up sequence comes from a motor.

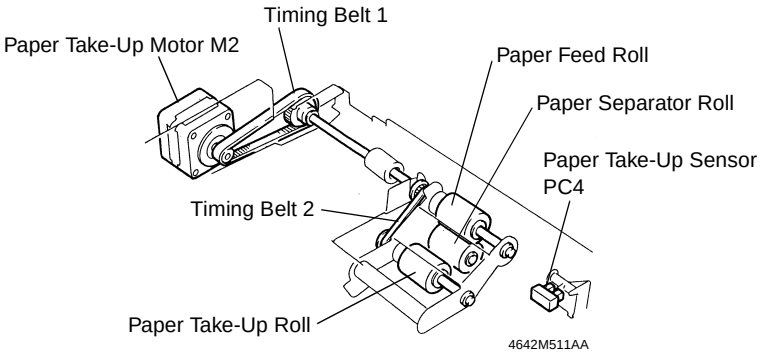

7-2. Paper Separating Mechanism

The difference in friction coefficient between the Feed Roll and Separator Roll is used to stop the rotation of the Separator Roll for the prevention of double feed.

Normal feeding:

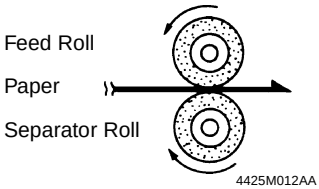

Drive or stops

- When only one sheet of paper is taken up, the friction coefficient on the top side of the paper is equal to that on the underside. The Separator Roll is driven by the Feed Roll, which results in the paper being fed on.

Double feeding:

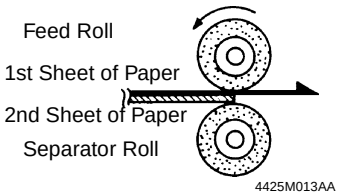

Stops

- Since the friction coefficient between the second sheet of paper and the Separator Roll is greater than that between the first and second sheets of paper, the Separator Roll remains stationary, allowing the Feed Roll to feed only the first sheet of paper.

7-3. Double Feed Paper Take-Up Control

If a sheet of paper has reached the Paper Take-Up Sensor when the trailing edge of a preceding sheet of paper moves past the Paper Take-Up Sensor, feeding of the second sheet of paper starts only after the trailing edge of the first sheet of paper moves past Paper Leading Edge Sensor SW2. This reduces the number of misfeeds that would otherwise be caused by double feeding.

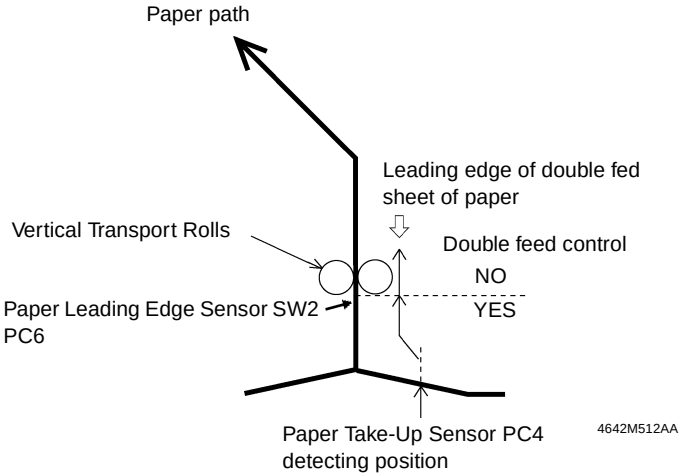

7-4. Paper Take-Up Interval Control

To minimize the occurrence of a paper misfeed due to improper paper separation, the paper take-up sequence is temporarily halted if the paper fails to reach the Paper Take-Up Detecting Sensor within a given period of time after the sequence has been started. After another given period of time, the paper take-up sequence is performed a second time, thereby ensuring a good interval between two paper take-up sequences.

7-5. Paper Take-Up Motor Control

The Paper Take-Up Motor is controlled by the signal output from the Drive Control Board.

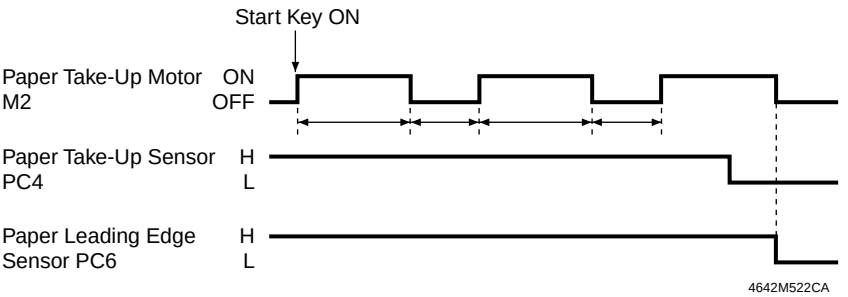

7-6. Paper Retry Control

To minimize the occurrence of a paper misfeed, the paper take-up sequence is temporarily halted if the paper fails to reach the Paper Take-Up Detecting Sensor within a given period of time after the sequence has been started. The paper take-up sequence is then performed again. These paper take-up sequences are repeated a given number of times.

Paper Take-Up Retry	No. of Paper Take-Up Retry Sequences
	Three Times

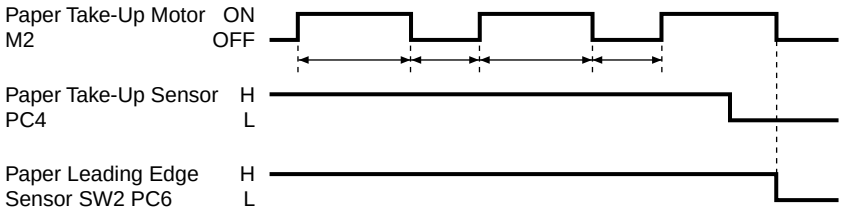

7-7. Paper Empty Detecting Mechanism

The Paper Empty Sensor detects a paper-empty condition in the drawer.

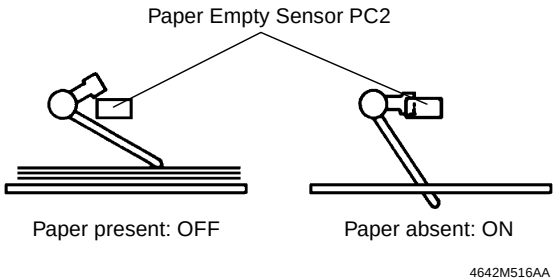

7-8. LCT-in-Locked-Position Detection System

- The Set Sensor detects that the LCT has been locked to the copier.

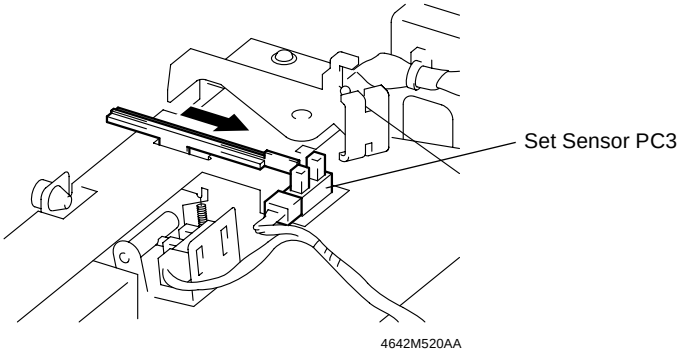

7-9. Paper Dehumidifier Heaters (Option)

A heater is used to prevent image transfer failure from occurring due to damp paper as a result of variations in the environmental conditions (temperature and humidity) surrounding the copier.

	Paper Dehumidifying Switch ON		
	Power cord plugged in	Power Switch ON	
		Upper Fusing Roller Heater Lamp ON	Upper Fusing Roller Heater Lamp OFF
Paper Dehumidifying Heater	ON	OFF	ON

DIS/REASSEMBLY, ADJUSTMENT

1. DISASSEMBLY

1-1. Maintenance Schedule

- To ensure good copies and an extended service life of the Duplex Unit, it is recommended that the maintenance jobs described in this schedule be carried out.

PM Parts	Maintenance Schedule Cycle (K)		Tools Used for Cleaning	Parts No.	QTY	PM Counter	Reference Page
	Clean	Replace					
Paper Take-Up Roll	When a malfunction occurs	200	Cloth, alcohol	1075-3051-01	1	LCT	☞ D-2
Paper Feed Roll	When a malfunction occurs	200		1075-3051-01	1	LCT	☞ D-2
Paper Separator Roll	When a malfunction occurs	–		–	1	LCT	☞ D-3
Paper Separator Roll Assy	–	200		4421-0165-02			

K = 1,000 sheets

✻ Perform the service job based on the values of the PM Counter of the copier.

✻ The above information is subject to change without notice.

✻ The Paper Feed Roll and Paper Separator Roll Assy should be replaced as a set.

1-2. Removal of the Paper Take-Up Roll and Paper Feed Roll

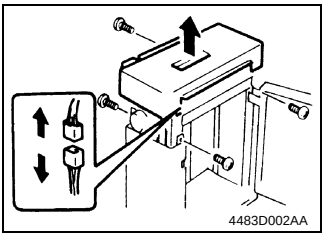

1. Loosen four screws, unplug the Connector, and remove the Top Cover.

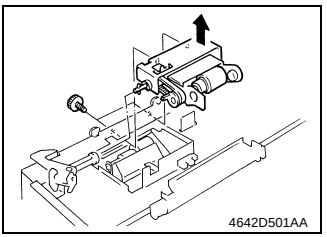

2. Remove two screws and the Paper Feed Roll Unit.

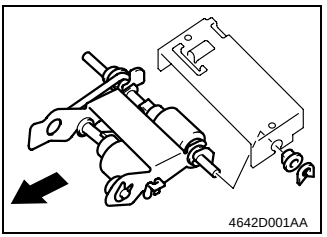

3. Snap off one C-clip, remove the bushing, and the Paper Feed Roll Assy.

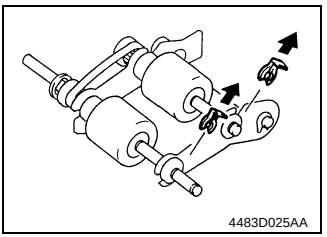

4. Remove one C-clip each from the Paper Feed Roll Shaft and Paper Take-Up Roll Shaft.

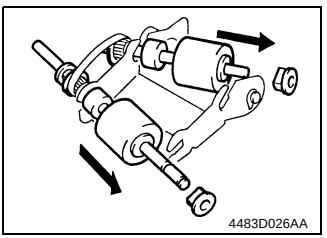

5. Slide off the bushings, the Paper Feed Roll and Paper Take-Up Roll.

1-3. Removal of the Paper Separator Roll Assy

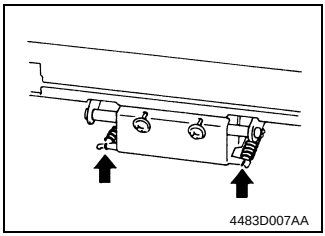

1. Remove the two springs in the Paper Separator Roll Unit.

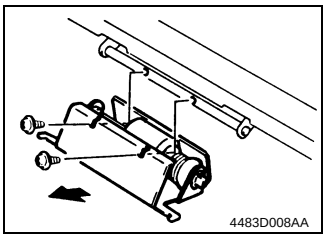

2. Remove two screws and the Paper Separator Roll Unit.

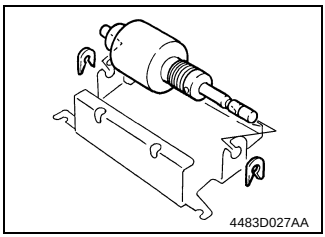

3. Snap off two E-rings, slide the bushing, and remove the Paper Separator Roll Assy.

2. ADJUSTMENT

2-1. Adjustment of Paper Registration

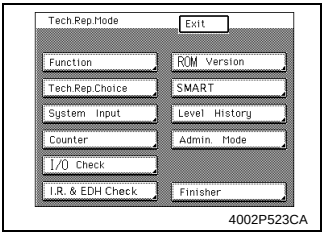

4002P523CA

1. Press the Utility key and touch “Meter Count.”
2. Press the following keys in this order to show the Tech. Rep. mode screen: Stop → 0 → 0 → Stop → 0 → 1.
3. Touch “Function.”

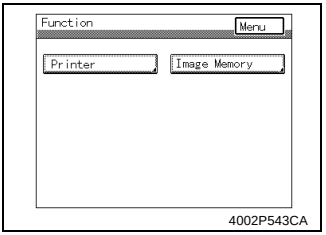

4002P543CA

4. Touch “Printer.”

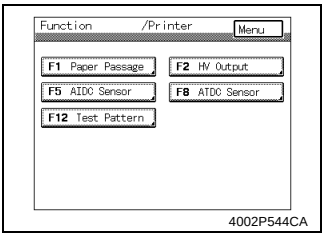

4002P544CA

5. Touch “F12 Test Pattern.”

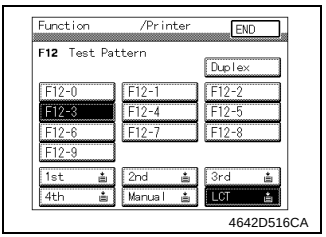

4642D516CA

6. Touch “F12-3.”
7. Touch “LCT.”
8. Press the Start key and Stop key, in that order, to produce a test print.

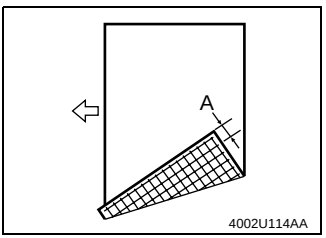

4002U114AA

9. Measure width A, which is the dimension between the leading edge and the second line, and check to see if it meets the specifications.

✻ Specifications: 8.5 ± 1.0 mm

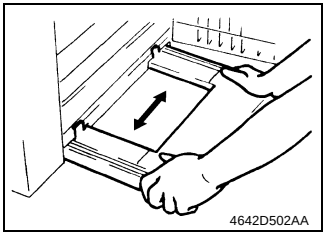

4642D502AA

10. If readjustment is necessary, move the Support Base of the LCT as necessary and produce a test print again to make sure of the correct adjustment.

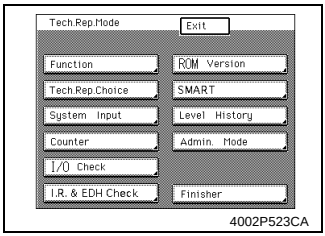

4002P523CA

11. Press the Panel Reset key and call the Tech. Rep. Mode menu to the Touch Panel.
12. Press the Stop key and then Start key to show the Adjust screen.

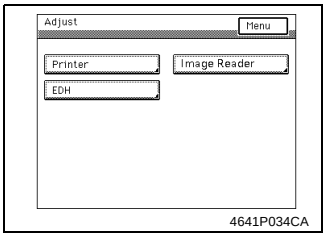

4641P034CA

13. Touch “Printer.”

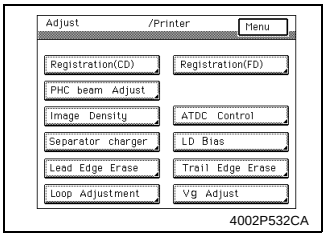

4002P532CA

14. Touch “Registration (CD).”

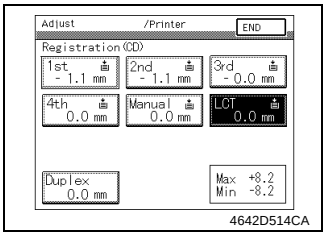

4642D514CA

15. Touch “LCT.”
16. Press the Start key to produce a test print.

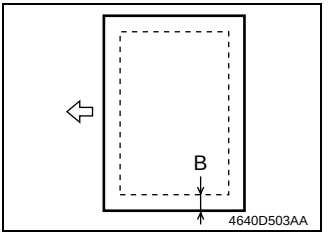

17. Check to see if width B meets the specifications.
✻ Specifications: 5 ± 0.5 mm

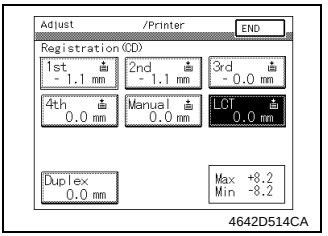

18. If width B falls outside the specified range, press the Clear key and enter registration from the 10-Key Pad.
✻ Use the Access key to enter a “+” or “-” sign.
19. Produce a test print again and check for correct registration.

3. MISCELLANEOUS

3-1. Conversion of Paper Size

(1) C-306

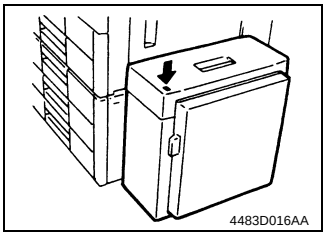

1. Press the Paper Plate Descent Switch to lower the Paper Plate to its lower most position.

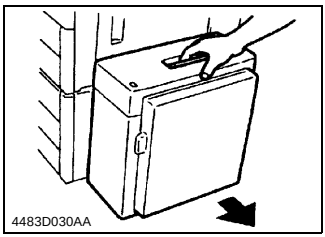

2. Turn OFF the Power Switch of the copier and unplug the power cord of the copier. Then press the Tray Unlocking Lever and slide the LCT away from the copier.

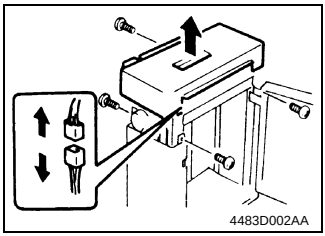

3. Open the Tray Door, loosen four screws, unplug the connector, and remove the Top Cover.

NOTE
For ease of understanding, the illustration shows the LCT with the screws removed.

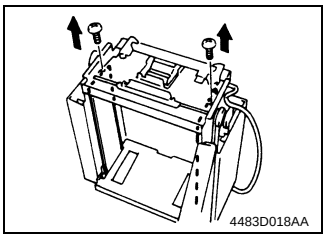

4. Remove the screws for the Front and Rear Edge Guides.

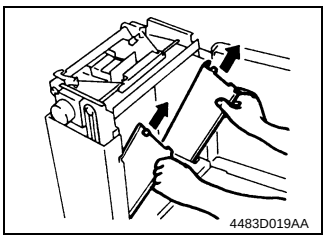

5. Remove the Front and Rear Edge Guides.

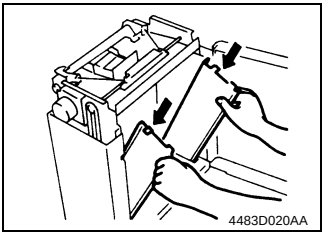

6. Referring to the following table and illustration, fit the Front and Rear Edge Guides into the top and bottom slots corresponding to the paper size to be loaded.

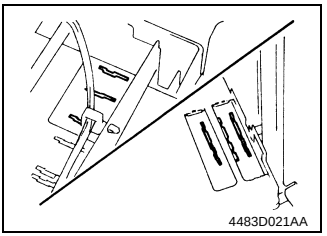

Paper Size	Slot
A4C	Outer slots
B5C	Inner slots
11 × 8-1/2C	Center slots

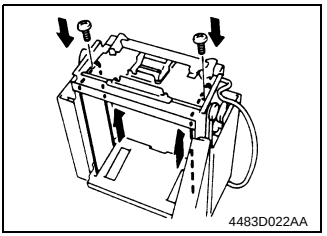

7. Secure the Edge Guides with the two screws.
8. In the Tech. Rep. Mode of the copier, input the new paper size.

✻ For the paper size input procedure, see the copier's Service Manual.

(2) C-306L

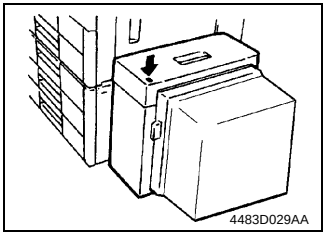

1. Press the Paper Plate Descent Switch to lower the Paper Plate to its lower most position.

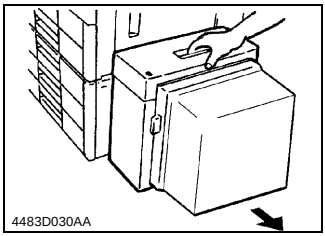

2. Turn OFF the Power Switch of the copier and unplug the power cord of the copier from the outlet. Then, press the Tray Unlocking Lever and slide the cassette away from the copier.

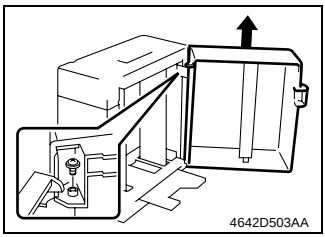

3. Remove one screw and the Cassette Door.

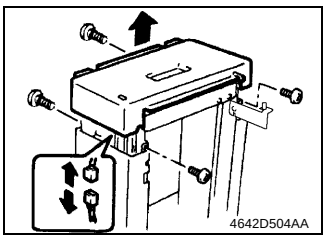

4. Open the Tray Door, loosen four screws, unplug the connector, and remove the Top Cover.

NOTE
For ease of understanding, the illustration shows the LCT with the screws removed.

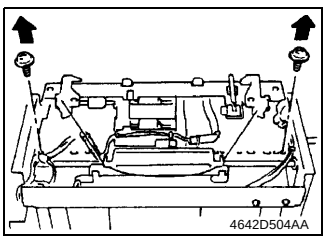

5. Remove the screws for the Front and Rear Edge Guides.

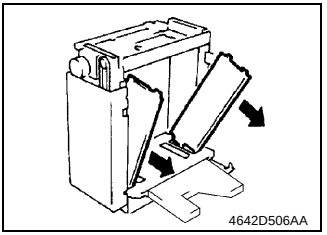

6. Remove the Front and Rear Edge Guides.

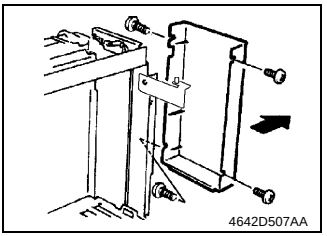

7. Loosen four screws and remove the Rear Cover.

NOTE
For ease of understanding, the illustration shows the LCT with the screws removed.

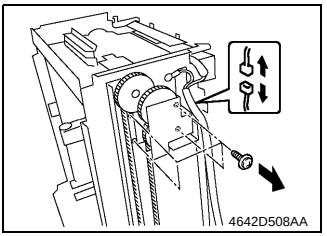

8. To free the Paper Plate, remove four screws, unplug one connector, and remove the Paper Plate drive assy.

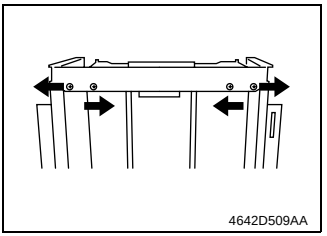

9. Loosen four screws. Slide the Upper Size Plates inward or outward to match the size of the paper and then tighten the screws.
10. Raise the Paper Plate and move the Lower Size Plates as necessary in the same manner.

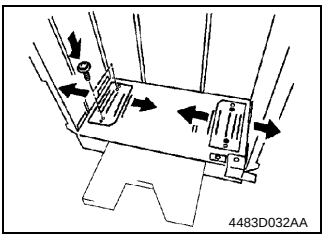

Paper Size	Upper and Lower Size Plate	
	Front	Rear
A4C	Upper: IN Lower: OUT	OUT
11 × 8-1/2C	OUT	OUT
B5C	Not Used	OUT
A4L	IN	IN
11 × 8-1/2L 14 × 8-1/2L	OUT	OUT

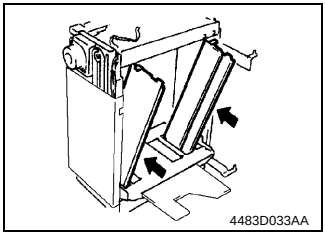

11. Lower the Paper Plate and fit the Front and Rear Edge Guides into the top and bottom slots corresponding to the size of the paper to be loaded. (See the next diagram.)

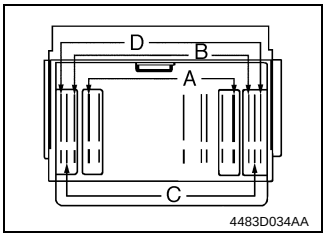

A: A4L, 11 × 8-1/2L, 14 × 8-1/2L
B: B5C
C: 11 × 8-1/2C
D: A4C

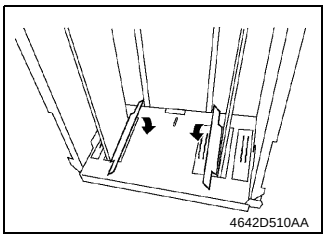

12. Peel off the seals from the H Guides that come with the LCT and affix them to the Paper Plate.

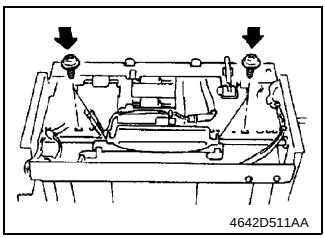

13. Raise the Front and Rear Edge Guides and install the positioning screws in alignment with the top slots. (See the next diagram.)

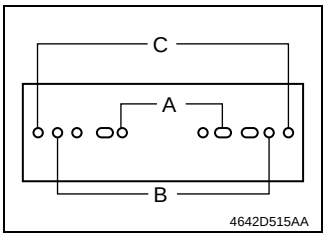

A: A4L, B5C, 11 × 8-1/2L, 14 × 8-1/2L
B: 11 × 8-1/2C
C: A4C

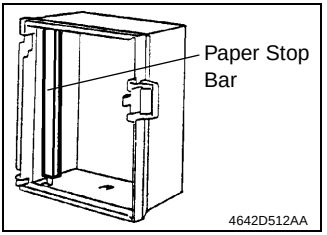

14. According to the size of the paper to be loaded, change the position of the Trailing Edge Stop which has been fitted to the Cassette Door.

    For A4C, B5C, and 14 × 8-1/2L:

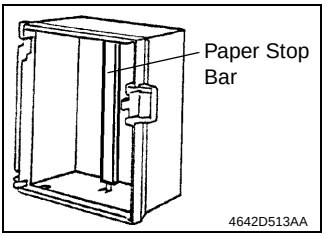

    For A4L and 11 × 8-1/2C:

15. Using the Tech. Rep. mode function offered by the copier, input the new paper size.

✻ For the paper size input procedure, see the copier's Service Manual.

MISFEED DETECTION

1. MISFEED DETECTION

1-1. I/O Check

- The Tech. Rep. mode offered by the copier can be used to check sensors of the LCT for operation, which may be used for troubleshooting and other purposes.

Sensor Checking Procedure

1. Access the Tech. Rep. Mode Screen and select “I/O Check” mode.
2. Press the “Next” key to access the screen which includes the item of “LCT”. (Refer to the SWITCHES ON PWBs/TEST MODE Section of the copier manual.)
3. Refer to the following table and ensure the state of the Sensor to be checked.
4. Change the state of that Sensor with a finger, sheet of paper or the like.
5. The Sensor is normal if its state has changed. If its state remains unchanged, the Sensor itself or the Board may be faulty.

Symbol	Panel Display		Sensor	Panel Display	
				1	0
PC1	LCT	Raised Position	Paper Plate Uppered Position Sensor	Raised position	Position other than raised
PC6		Lowered Position	Paper Plate Lowered Position Sensor	Lowered position	Position other than lowered
PC4		Take-Up	Paper Take-Up Sensor	Paper present	Paper not present
PC5		Door	Cassette Door Sensor	Closed	Open
S1B		Descent SW	Paper Plate Descent Key	ON	OFF
PC3		Set	Set Sensor	Locked	Not locked
PC2		Paper Empty	Paper Empty Sensor	Paper present	Paper not present

1-2. Misfeed Detection Timings

- The following lists the types of misfeed detection and detection timings for different misfeed locations within the Duplex Unit.
- The symbol “L” (for the leading edge) and “T” (for the trailing edge) given in ( ) indicate the particular edge of the paper detected by the sensor.

Type	Detection Start	Detection
Paper left	Power Switch ON	Paper Take-Up Sensor (L)
	Malfunction reset	
Paper take-up failure	Paper Take-Up Motor energized	Paper Take-Up Sensor (L)
Paper take-up trailing edge detection	Paper Take-Up Sensor (L)	Paper Take-Up Sensor (T)
Leading edge detection by Transport Roller Sensor	Paper Take-Up Sensor (L)	Transport Roller Sensor (L)

1-3. Misfeed Troubleshooting Procedures

✻ If the misfeed is not eliminated after these procedures, check the copier.

(1) Misfeed occurring before a copy cycle is started

Step	Check	Result	Action
1	There is a sheet of paper being fed through the LCT.	YES	Remove the paper.
2	Paper Take-Up Sensor operation: “Take-up” of the I/O Check screen changes from 0 to 1 when the sensor is unblocked.	YES	Change Drive Control Board.
		NO	Change sensor.

(2) Misfeed occurring after a copy cycle has been started

Step	Check	Result	Action
1	Paper Take-Up Motor rotation	NO	Change motor. Change Drive Control Board.
2	Paper being used meets the specifications.	NO	Instruct user.
3	Paper is curled, wavy, or damp.	YES	Change paper. Instruct user.
4	The Paper Take-Up, Feed, or Separator Roll is deformed, worn, or dirty with paper dust.	YES	Clean or change the defective roll.
5	The paper path is deformed or dirty.	YES	Clean or change.
6	Paper Take-Up Sensor operation: “Take-up” of the I/O Check screen changes from 0 to 1 when the sensor is unblocked.	YES	Change Drive Control Board.
		NO	Change sensor.

2. MALFUNCTION DETECTION

2-1. Types of Malfunction Detection and Detection Timing

Malfunction Code	Description	Detection Timing
C09C0	Elevator ascent/descent failure	(Ascent) • The Paper Plate Raised Position Sensor is not blocked even after the lapse of a given period of time after the Elevator Motor has started turning backward (for upward motion). • The Paper Plate Raised Position Sensor is not blocked even after the lapse of a given period of time after the Elevator Motor has started turning backward (for upward motion) and the Paper Empty Sensor has been unblocked.
		(Descent) • The Paper Plate Lowered Position Sensor is not blocked even after the lapse of a given period of time after the Elevator Motor has started turning forward (for downward motion).

2-2. Malfunction Troubleshooting Procedures

✻ If the misfeed is not eliminated after these procedures, check the copier.

(1) Ascent

Step	Check Item	Result	Remedy
1	Paper Plate Raised Position Sensor operation: “Raised Position” of the I/O Check screen changes from 0 to 1 when the sensor is blocked.	YES	Change Drive Control Board.
		NO	Change sensor.
2	Elevator Motor operation: The voltage across PJ5A-3 and GND is DC0V when the motor is deenergized and DC24V when the motor is energized for downward motion while the Cassette Door is being opened and closed after the malfunction has been reset.	YES	Change motor.
		NO	Change Drive Control Board.

(2) Descent

Step	Check Item	Result	Remedy
1	Paper Plate Lowered Position Sensor operation: “Lowered Position” of the I/O Check screen changes from 0 to 1 when the sensor is blocked.	YES	Change Drive Control Board.
		NO	Change sensor.
2	Elevator Motor operation: The voltage across PJ5A-3 and GND is DC0V when the motor is deenergized and DC24V when the motor is energized for downward motion while the Cassette Door is being opened and closed after the malfunction has been reset.	YES	Change motor.
		NO	Change Drive Control Board.

FN-105/FN-106

SERVICE MANUAL

14413

CONTENTS

GENERAL, MECHANICAL/ELECTRICAL

1. SPECIFICATIONS M-1
2. PARTS IDENTIFICATION M-3
3. CROSS-SECTIONAL VIEW M-4
4. DRIVE SYSTEM M-5
5. ELECTRICAL COMPONENTS LAYOUT M-6
6. PAPER TRANSPORT M-8
   - 6-1. Paper Transport Mechanism M-8
     - (1) Entrance Section Paper Transport Mechanism M-8
     - (2) 1st Tray Paper Transport Mechanism M-9
     - (3) Finisher Tray Paper Transport Mechanism M-10
     - (4) Elevator Tray Paper Transport Mechanism M-11
   - 6-2. Paper Switchback Mechanism M-12
   - 6-3. Roller/Rolls Spacing Mechanism M-13
     - (1) Storage Roller/Rolls Spacing Mechanism M-13
     - (2) Exit Roller/Rolls Spacing Mechanism M-13
7. PUNCH MECHANISM (FN-105) M-14
8. FINISHER TRAY M-16
   - 8-1. Paper Aligning Mechanism M-17
     - (1) Aligning Plate M-17
     - (2) Paddles M-18
9. STAPLING M-19
   - 9-1. Stapling Mechanism M-19
   - 9-2. Stapling Unit Moving Mechanism (FN-105) M-20
   - 9-3. Staple Sheet Empty Detection M-21
10. ELEVATOR TRAY M-22
    - 10-1.Elevator Tray Ascent/Descent Mechanism M-22
    - 10-2.Elevator Tray Shifting Mechanism M-24

SWITCHES ON PWB, TEST MODE

1. SWITCHES ON PWB S-1
2. TEST MODE S-2
   - 2-1. Test Mode Setting Procedure S-2
   - 2-2. Test Mode Operations S-2
   - 2-3. Operation in Each Test Mode Operation S-3
     - (1) 1st Tray Exit S-3
     - (2) Elevator Tray Exit S-3
     - (3) Finisher Tray Exit S-3
     - (4) Shifting Operation S-3
     - (5) Aligning Plate Operation S-4
     - (6) Stapling Unit CD Movement S-4
     - (7) Exit Roller/Rolls Spacing S-4
     - (8) Storage Roller/Rolls Spacing S-4
     - (9) Elevator Tray Operation S-5
     - (10) Hole Punch Operation (FN-105) S-5
     - (11) Hole Position Selection (FN-105) U.S.A. and Canada S-5

(12) Sensor Test S-5

DIS/REASSEMBLY, ADJUSTMENT

1. DISASSEMBLY AND REASSEMBLY D-1
1-1. Maintenance Schedule D-1
1-2. Removal of the Exterior Parts D-1
1-3. Removal of the Punch Unit D-2
1-4. Removal of the Stapling Unit D-2
2. ADJUSTMENTS D-3
2-1. Check and Adjustment of the Hole Punch Positions D-3
2-2. Adjustment of Punch Loop Length D-4
2-3. Adjustment of the Solenoids D-5
(1) Adjustment of the Upper/Lower Entrance Switching Solenoid (SL1) D-5
(2) Adjustment of the 1st Tray Entrance Selecting Solenoid (SL2) D-5
2-4. Timing Belt Tension Adjustment D-6
(1) Adjustment of the Upper Entrance Motor (M4) Timing Belt D-6
(2) Adjustment of the Lower Entrance Motor (M2) Timing Belt D-6
(3) Adjustment of the Exit Motor (M3) Timing Belt D-6
2-5. Adjustment of the Elevator Tray Upper Limit Sensor D-7

TROUBLESHOOTING

1. SENSOR CHECK T-1
1-1. Sensor Check Screen T-1
1-2. Sensor Check List T-2
1-3. Sensor Check Procedure T-4
2. MISFEED DETECTION AND TROUBLESHOOTING PROCEDURES T-5
2-1. Misfeed Detecting Sensor Layout T-5
2-2. Misfeed Detection T-6
2-3. Misfeed Troubleshooting Procedures T-7
(1) Transport misfeed T-7
(2) Misfeed at the 1st Tray exit T-7
(3) Misfeed at the Elevator Tray exit T-8
(4) Paper stack exit misfeed T-8
(5) Staple misfeed T-8
3. MALFUNCTION DETECTION AND TROUBLESHOOTING PROCEDURES T-9
3-1. Malfunction Detection T-9
3-2. Malfunction Troubleshooting Procedures T-10
(1) C0B20 ..... T-10
(2) C0B30 ..... T-10
(3) C0B48 ..... T-10
(4) C0B4A T-10
(5) C0B50 ..... T-11
(6) C0B54 (FN-105) T-11
(7) C0B73 (FN-105) T-11
(8) C0B78 (FN-105): U.S.A. and Canada T-11

(9) C0B80 ..... T-11
(10) C0BA0 ..... T-12

GENERAL, MECHANICAL/ELECTRICAL

1. SPECIFICATIONS

Type	:	Multi Staple Finisher (FN-105) Single Staple Finisher (FN-106)
Installation	:	Freestanding
Modes	:	Non-Sort, Sort, Group, Sort Staple, Group Staple, Hole Punch (FN-105)

Copy Medium

Mode	Paper Type	Paper Size	Paper Weight	Capacity	Finishing Tray	No. of Sheets to be Stapled
Non-Sort	Plain paper	A3L to A6L 11 × 17 to 5-1/2 × 8-1/2	60 to 256 g/m^2 16 to 68 lb	250 sheets	1st Tray	———
	Recycled paper					
	Thick paper			20 sheets		
	Transparencies					
	Translucent paper					
	Postcards					
	Envelopes					
Sort, Group	Plain paper	A3L to B5L/C 11 × 17 to 8-1/2 × 11	60 to 256 g/m^2 16 to 68 lb	FN-105: 3,000 sheets (A4L or smaller), 1,500 sheets (B4L or larger) FN-106: 1,000 sheets (A4L or smaller), 500 sheets (B4L or larger)	Elevator Tray	———
	Recycled paper					
	Thick paper					
Sort Staple, Group Staple	Plain paper	A3L to B5L/C 11 × 17 to 8-1/2 × 11	60 to 90 g/m^2 16 to 24 lb			FN-105: 50 sheets (60 to 90 g/m^2, 16 to 24 lb) FN-106: 30 sheets (60 to 80 g/m^2, 16 to 21 lb)
	Recycled paper					
Hole Punch	Plain paper			———	1st Tray, Elevator Tray	———
	Recycled paper					

Registration	:	Center
No. of Holes	:	2, 3, or 4 holes
Power Requirements	:	DC24V (supplied from copier) DC5V (generated by Finisher)
Power Consumption	:	63W
Dimensions	:	Width: 538 mm, 21-1/4 Depth: 629 mm, 24-3/4 Height: 978 mm, 38-1/2
Mass	:	Metric: 39.2 kg (FN-105), 35.5 kg (FN-106) Inch: 86-1/2 lb (FN-105), 78-1/4 lb (FN-106)
Environmental Requirements	:	Same as copier
Supplies	:	Staple Cartridge

2. PARTS IDENTIFICATION

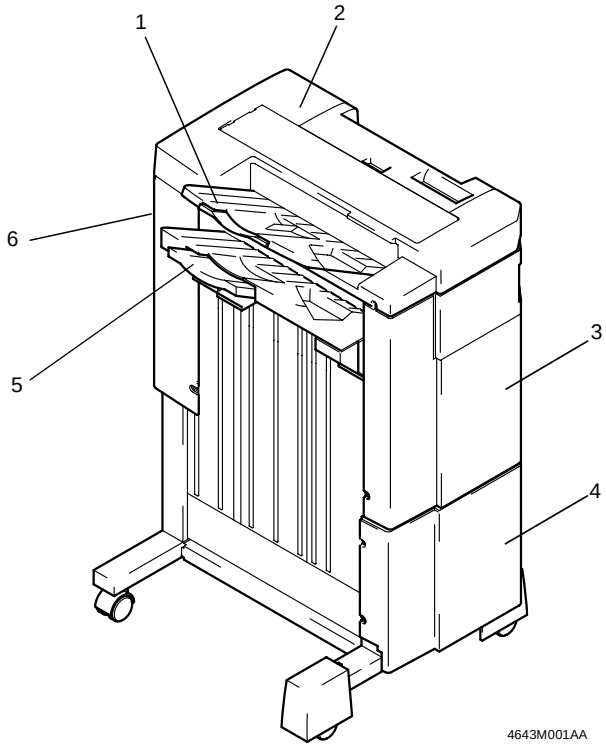

1. 1st Tray
2. Upper Cover
3. Upper Front Cover
4. Lower Front Cover
5. Elevator Tray
6. Rear Cover

3. CROSS-SECTIONAL VIEW

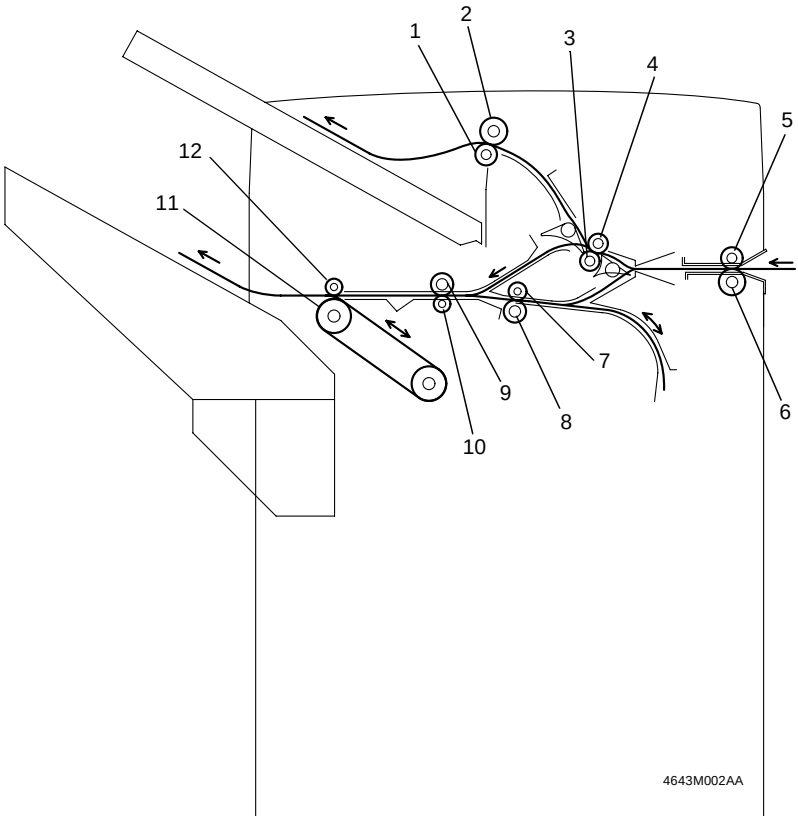

1. 1st Tray Exit Roll
2. 1st Tray Exit Roller
3. Upper Path Transport Roller
4. Upper Path Transport Roll
5. Entrance Roller
6. Entrance Roll
7. Lower Path Transport Roll
8. Lower Path Transport Roller
9. Storage Roller
10. Storage Roll
11. Exit Roller
12. Exit Roll

4. DRIVE SYSTEM

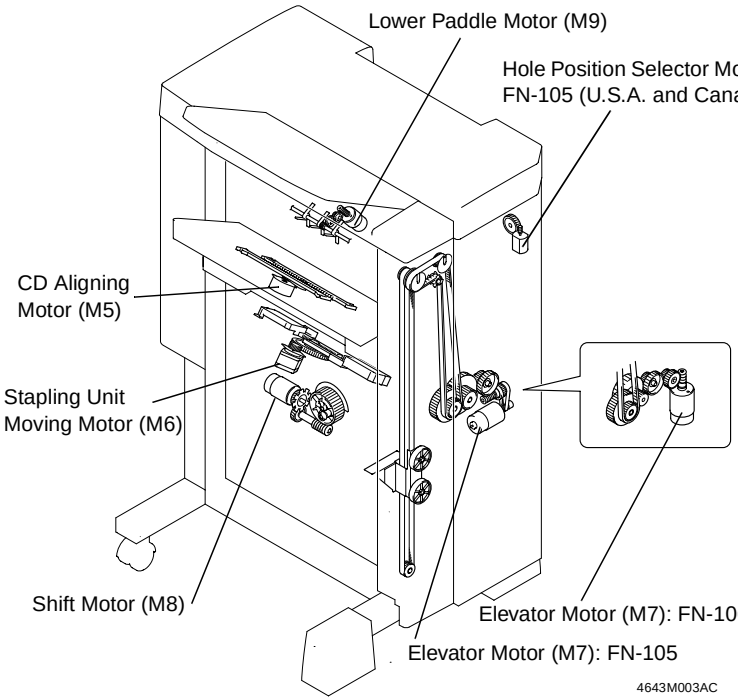

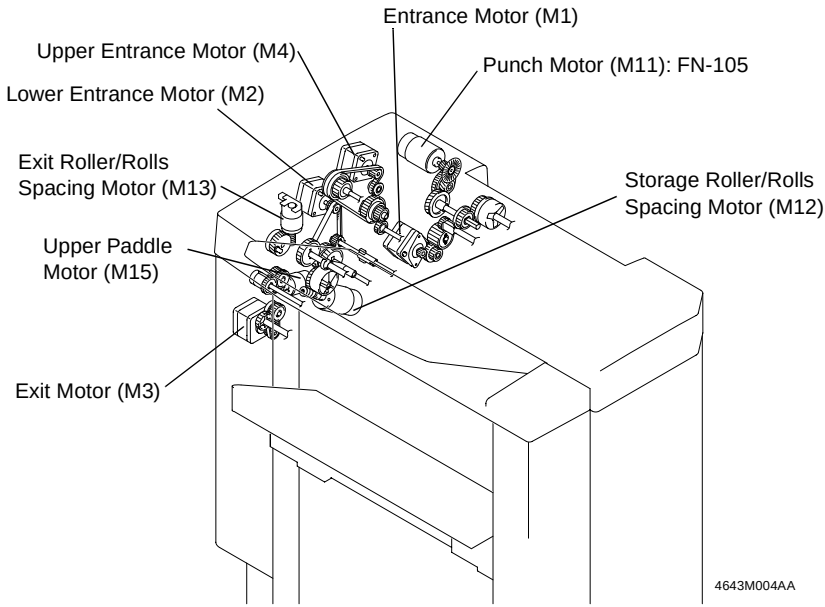

5. ELECTRICAL COMPONENTS LAYOUT

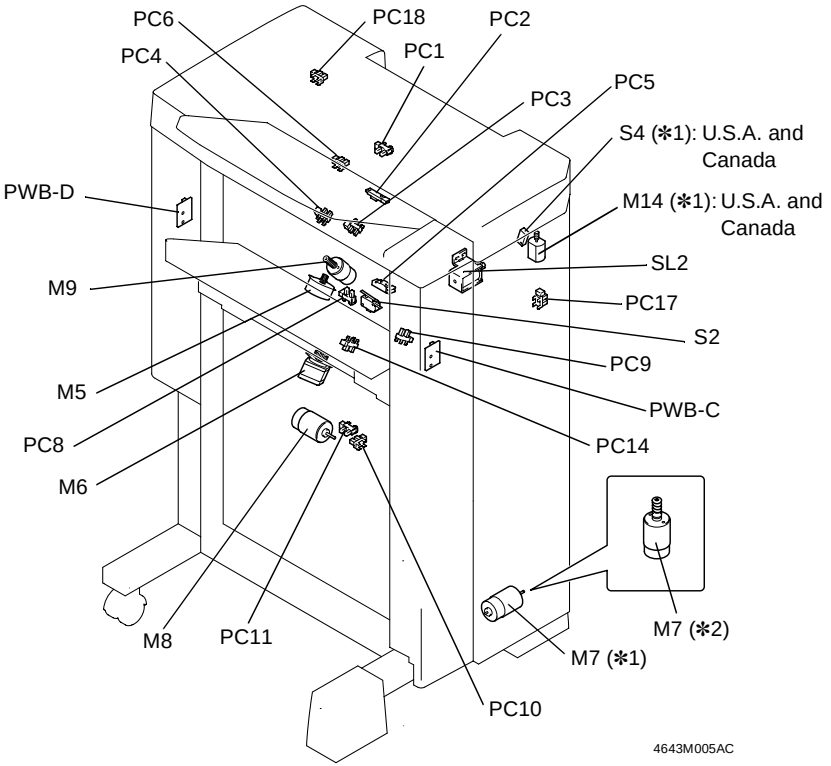

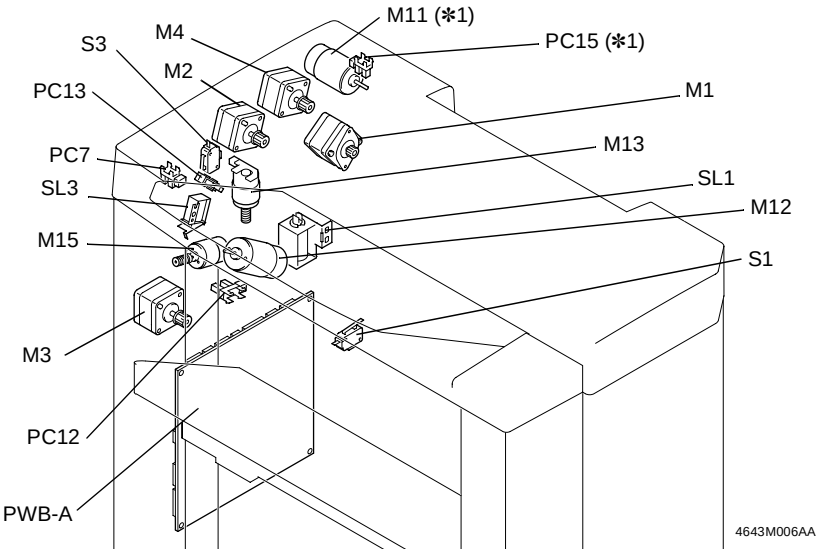

Symbol	Name	Symbol	Name
PWB-A	Control Board	PC1	1st Tray Exit Sensor
PWB-C	Elevator Tray Upper Limit Sensor LED	PC2	Lower Entrance Sensor
		PC3	Storage Sensor
PWB-D	Elevator Tray Upper Limit Sensor PQ	PC4	Upper Entrance Sensor
		PC5	Finisher Tray Paper Detecting Sensor
M1	Entrance Motor		
M2	Lower Entrance Motor	PC6	1st Tray Full Detecting Sensor
M3	Exit Motor	PC7	Elevator Tray Full Detecting Sensor
M4	Upper Entrance Motor		
M5	CD Aligning Motor	PC8	Elevator Tray Paper Detecting Sensor
M6	Stapling Unit Moving Motor		
M7 (✻1, ✻2)	Elevator Motor	PC9	CD Aligning Home Position Sensor
M8	Shift Motor		
M9	Lower Paddle Motor	PC10	Shift Home Position Sensor
M11 (✻1)	Punch Motor	PC11	Shift Motor Pulse Sensor
M12	Storage Roller/Rolls Spacing Motor	PC12	Storage Roller Home Position Sensor
M13	Exit Roller/Rolls Spacing Motor	PC13	Exit Roller Home Position Sensor
M14 (✻1)	Hole Position Selector Motor	PC14	Staple Home Position Sensor
M15	Upper Paddle Motor	PC15 (✻1)	Punch Motor Pulse Sensor
SL1	Upper/Lower Entrance Switching Solenoid	PC17	Front Door Detecting Sensor
		PC18	Upper Cover Detecting Sensor
SL2	1st Tray Entrance Selecting Solenoid	S1	Set Switch
		S2	Elevator Tray Upper Limit Switch
SL3	Upper Paddle Solenoid		
		S3	Elevator Tray Lower Limit Switch
		S4 (✻1)	Hole Punch Position Switch

(✻1): Parts used exclusively for FN-105
(✻2): Parts used exclusively for FN-106

6. PAPER TRANSPORT

6-1. Paper Transport Mechanism

(1) Entrance Section Paper Transport Mechanism

- The Entrance Roller is turned to transport the paper into the Finisher as the Entrance Motor is energized.

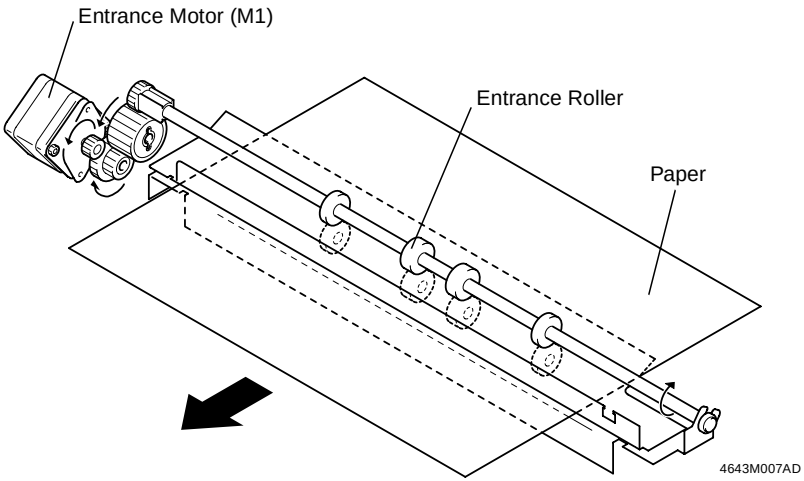

	CONTROL SIGNAL	Energized	Deenergized	WIRING DIAGRAM
M1	PWB-A PJ9A-1~-4	Pulse output		4-B

(2) 1st Tray Paper Transport Mechanism

- Paper transport to the 1st Tray takes place when the Finisher is in the Non-Sort mode.
- The Upper Path Transport Roller and 1st Tray Exit Roller turn to transport the paper into the 1st Tray as the motor is energized.
- The 1st Tray Entrance Selecting Solenoid and Upper/Lower Entrance Switching Solenoid are energized to select the paper path into the 1st Tray.

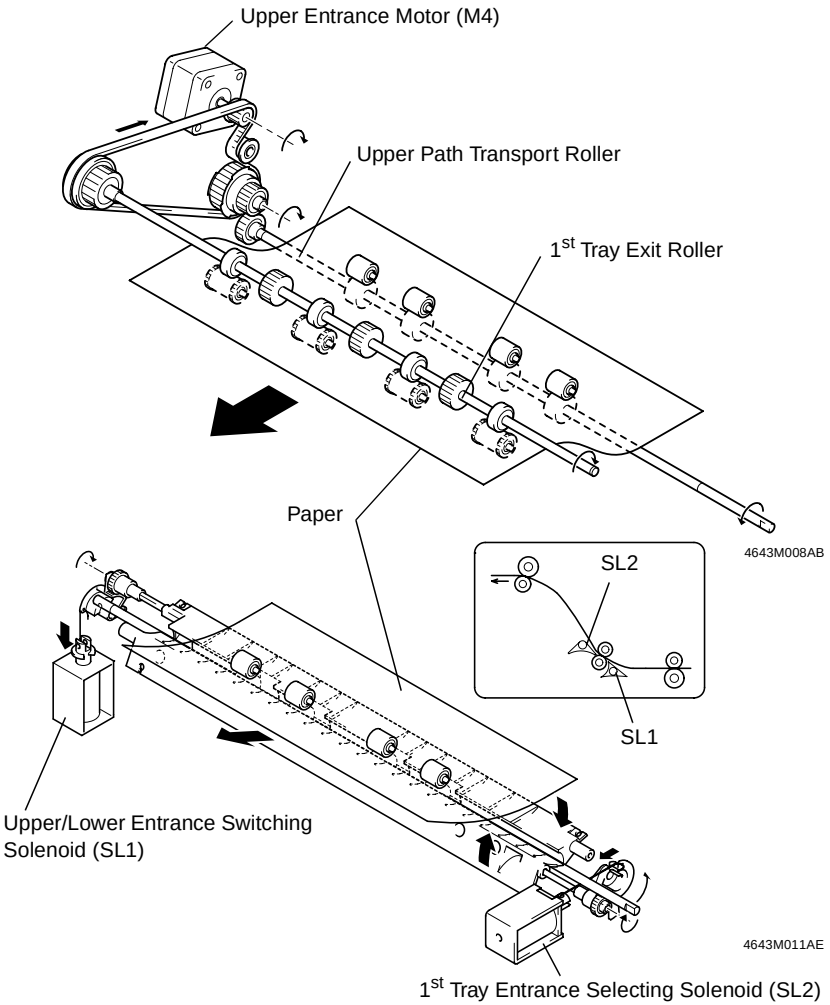

	CONTROL SIGNAL	Energized	Deenergized	WIRING DIAGRAM
M4	PWB-A PJ9A-5~-8	Pulse output		4-B
SL1	PWB-A PJ18A-2	L	H	9-D
SL2	PWB-A PJ18A-4	L	H	9-E

(3) Finisher Tray Paper Transport Mechanism

- Paper transport to the Finisher Tray takes place when the Finisher is in the Staple mode.
- As the Lower Entrance Motor is energized, the Storage Roller turns to transport the paper toward the exit direction.
- By turning the Exit Motor backward, paper is transported onto the Finisher Tray.
- Either the upper paper path or lower paper path is used depending on the copy mode to transport the paper onto the Finisher Tray.
- The upper paper path is selected when the Upper/Lower Entrance Switching Solenoid is energized, while the 1st Tray Entrance Selecting Solenoid is deenergized.
- The lower paper path is selected when the Upper/Lower Entrance Switching Solenoid is deenergized.

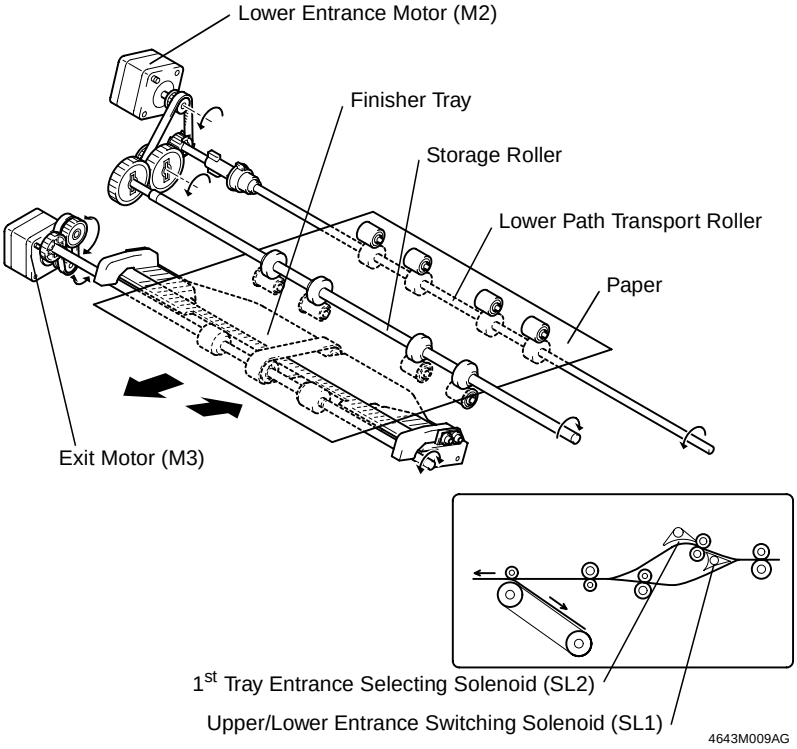

	CONTROL SIGNAL	Energized	Deenergized	WIRING DIAGRAM
M2	PWB-A PJ9A-9~-12	Pulse output		4-A

(4) Elevator Tray Paper Transport Mechanism

- Paper transport to the Elevator Tray takes place when the Finisher is in the Sort or Group mode.
- As the motor is energized, the Exit Roller turns to transport the paper into the Elevator Tray.
- Either the upper paper path or lower paper path is used depending on the copy mode to transport the paper into the Elevator Tray.
- The upper paper path is selected when the Upper/Lower Entrance Switching Solenoid is energized, while the 1st Tray Entrance Selecting Solenoid is deenergized.
- The lower paper path is selected when the Upper/Lower Entrance Switching Solenoid is deenergized.

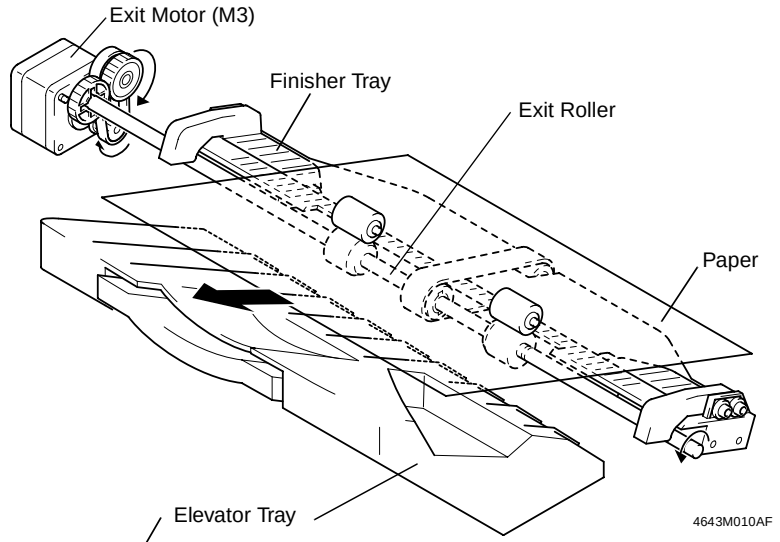

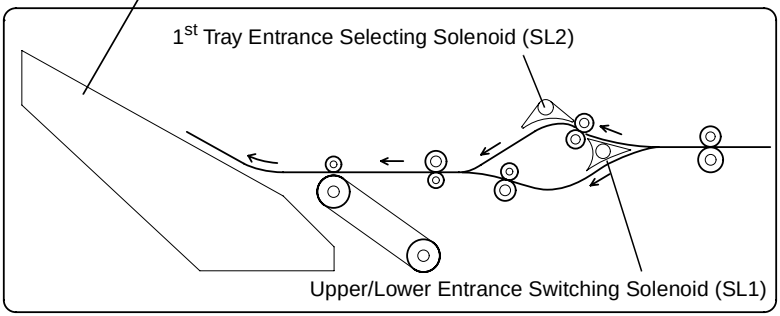

	CONTROL SIGNAL	Energized	Deenergized	WIRING DIAGRAM
M3	PWB-A PJ8A-1~-4	Pulse output		3-A

6-2. Paper Switchback Mechanism

- When the last paper of the first copy set is transported onto the Finisher Tray during a multi-copy cycle in the Sort Staple mode, the first paper of the subsequent copy set, which is to be next transported, undergoes a switchback sequence. The paper for the switchback is transported via the lower paper path.
- The second paper of the second copy set is placed over the paper which has undergone the switchback sequence. After the first copy set has been fed into the Elevator Tray, the first and second sheets of paper of the second copy set are together transported onto the Finisher Tray.
- The switchback sequence of the paper is performed by turning the motor backward, which turns the Lower Path Transport Roller and Storage Roller backward.
- The sheet of paper to be transported next to the one subjected to the switchback sequence is transported via the upper paper path.

<Three A4L originals for two copy sets>

①, ②, ③: Sheets of paper for the first copy set
①', ②', ③': Sheets of paper for the second copy set

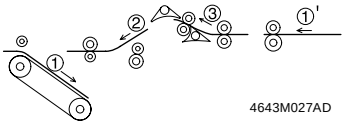

The sheets of paper for the first copy are transported via the upper paper path onto the Finisher Tray.

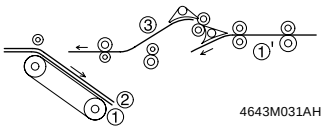

The first sheet of paper of the second copy set is transported via the lower paper path.

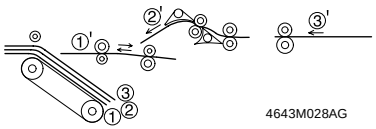

The first sheet of paper of the second copy set undergoes the switchback sequence.

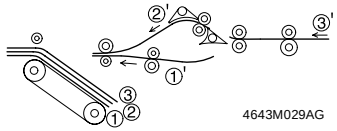

The first and second sheets of paper of the second copy set are transported together, one on top of the other.

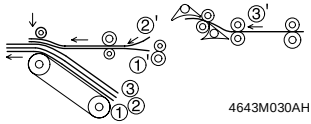

The Exit Rolls are pressed against the Exit Roller to feed the sheets of paper of the first copy set out. At the same time, the first and second sheets of paper of the second copy set are transported toward the exit.

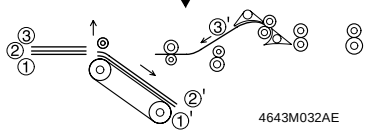

When the first copy set is fed out, the Exit Roller starts turning backward to transport the first and second sheets of paper of the second copy set to the Finisher Tray. The Exit Rolls leave the Exit Roller.

6-3. Roller/Rolls Spacing Mechanism

(1) Storage Roller/Rolls Spacing Mechanism

- When the first sheet of paper of the second copy set is to be subjected to a switchback sequence during a multi-copy cycle in the Sort Staple mode, the Storage Roller briefly stops and then starts turning backward. The second sheet of paper is stationary during the switchback sequence. If, however, the paper measures 217 mm or more in the feeding direction, it reaches the Storage Roller before the roller stops turning. The Storage Roller is therefore raised up to allow a given clearance from the Storage Rolls.
- The Storage Roller is spaced from the Storage Rolls as a cam is turned by the corresponding motor.

(2) Exit Roller/Rolls Spacing Mechanism

- Paper needs to be temporarily transported to the Finisher Tray in the Staple mode, which makes it necessary to raise the Exit Rolls to provide a given clearance from the Exit Roller.
- After the stapling sequence has been completed, the Exit Rolls are lowered and pressed against the Exit Roller so that the paper can be fed out.
- The Exit Rolls are spaced from the Exit Roller as a lever is moved to the right and left by the corresponding motor.

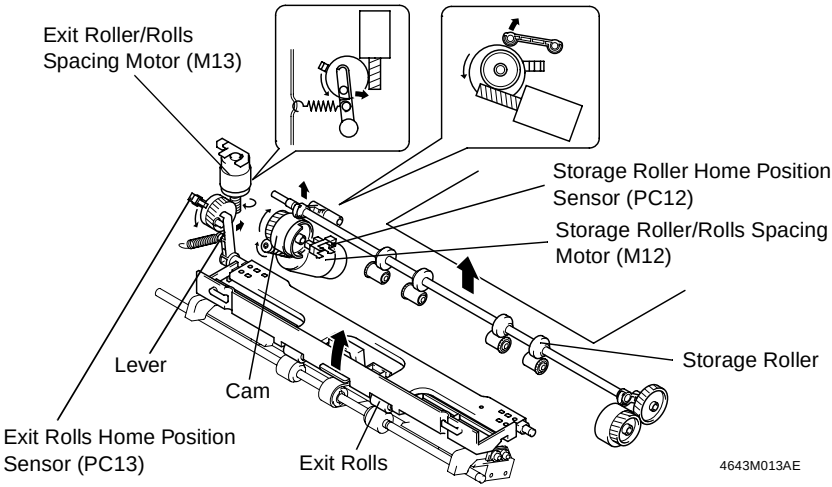

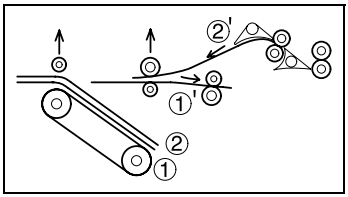

	CONTROL SIGNAL	Energized	Deenergized	WIRING DIAGRAM
M12	PWB-A PJ8A-6	Pulse output	L	3-A
M13	PWB-A PJ16A-2	H	L	9-C

7. PUNCH MECHANISM (FN-105)

- The paper being transported through the Finisher is briefly stopped and holes are made in a space near its trailing edge.
- When the Punch Motor is energized and the electromagnetic spring clutch fitted to the Punch Roller is energized, the Punch Bars move up and down to make holes in the paper.

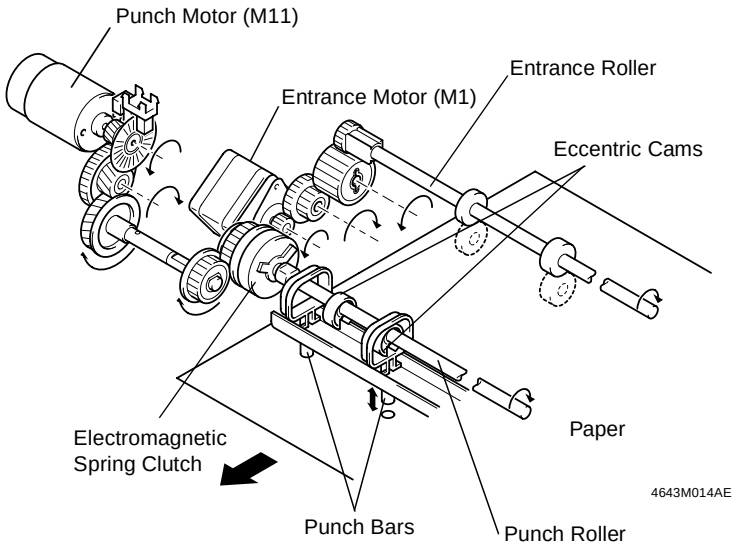

(Operation)
The Entrance Motor is energized and paper is allowed into the Finisher.

↓

The trailing edge of the paper moves past the Paper Exit Sensor of the copier.

↓

A given period of time thereafter, the Upper Entrance Motor or Lower Entrance Motor is deenergized to bring the paper to a stop.

↓

The electromagnetic spring clutch is energized to turn the Punch Roller and the eccentric cams.

↓

The Punch Bars move up and down to make holes in the paper.

↓

The Upper Entrance Motor or Lower Entrance Motor is energized to transport the paper.

	CONTROL SIGNAL	Energized	Deenergized	WIRING DIAGRAM
M11	PWB-A PJ6A-1	Pulse output	H	2-C

U.S.A. and Canada

- The Hole Position Selector Motor and Hole Punch Position Switch are employed to move the lock holder as necessary to select the hole positions (2 or 3 holes).

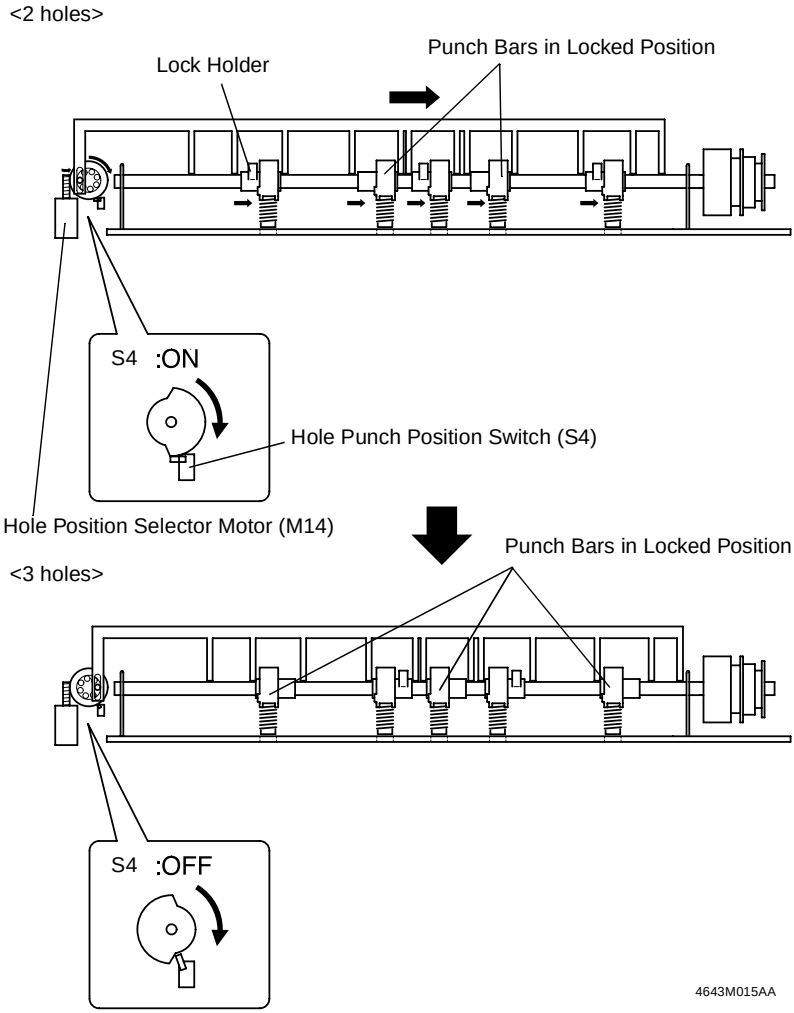

8. FINISHER TRAY

- Sheets of paper are properly aligned and stapled together on the Finisher Tray before being fed out into the Elevator Tray.

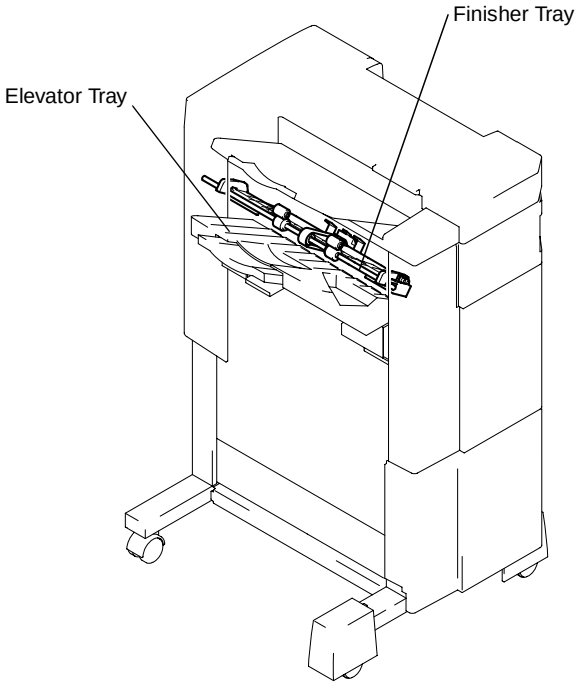

4643M016AA

8-1. Paper Aligning Mechanism

- The Aligning Plate is moved and the Paddles are turned to align paper correctly for stapling.

(1) Aligning Plate

- The Aligning Plate is moved to align the paper in the crosswise direction with reference to the center position of the Finisher Tray.
- The Aligning Plate is moved as the CD Aligning Motor turns forward or backward.
- The CD Aligning Home Position Sensor detects the Aligning Plate at its home position. The movement of the Aligning Plate is determined with this home position used as the reference.
- The movement of the plate is varied depending on the width of the paper.

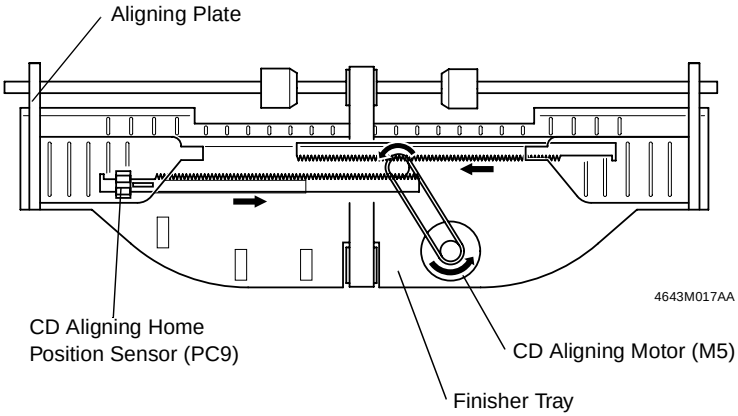

	CONTROL SIGNAL	Energized	Deenergized	WIRING DIAGRAM
M5	PWB-A PJ11A-5~-8	Pulse output		6-A

	CONTROL SIGNAL	Blocked	Unblocked	WIRING DIAGRAM
PC9	PWB-A PJ25A-6	H	L	2-I

(2) Paddles

- The Upper and Lower Paddles are turned to align the paper in the feeding direction.
- The Upper Paddles are turned by the Upper Paddle Motor and Upper Paddle Solenoid.
- The Lower Paddles are turned by the Lower Paddle Motor.

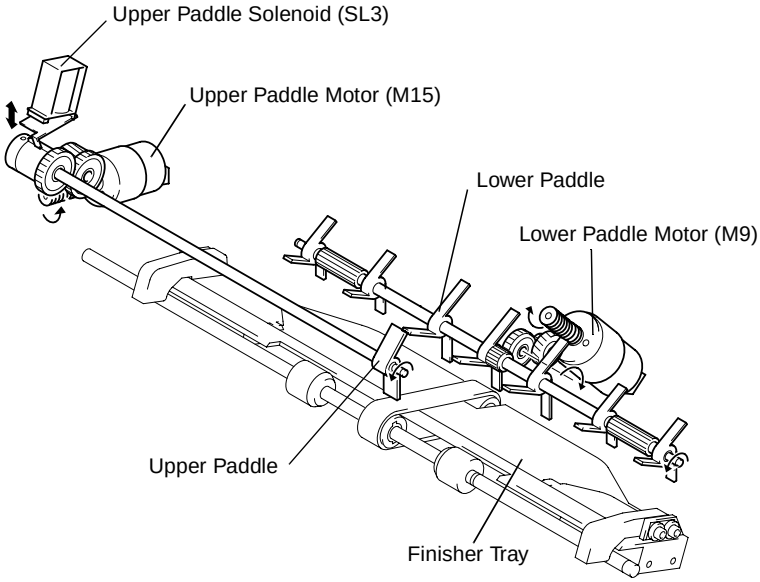

	CONTROL SIGNAL	Energized	Deenergized	WIRING DIAGRAM
M9	PWB-A PJ11A-2	L	H	6-A
M15	PWB-A PJ16A-6	L	H	9-D
SL3	PWB-A PJ16A-4	L	H	9-D

9. STAPLING

9-1. Stapling Mechanism

- The Stapling Unit performs the stapling action.
- When the Stapling Motor turns, the Clinch Arm lowers. Then the Stapler moves up to drive a staple into paper and the staple is formed.
- The following stapling modes are available to choose from.
  FN-105: Rear corner, Front corner, and 2-point side
  FN-106: Rear corner

<FN-105>

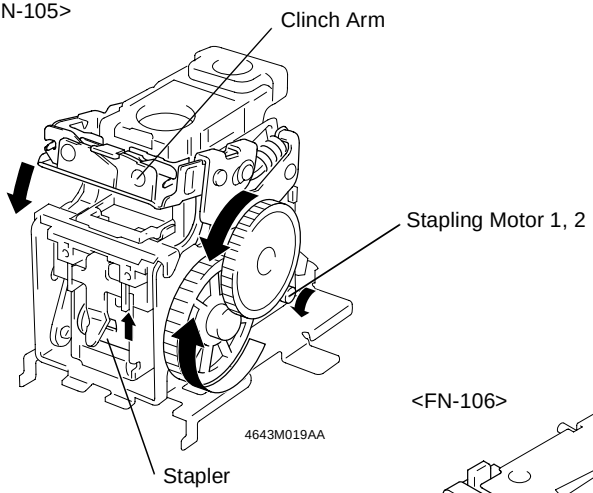

<FN-106>

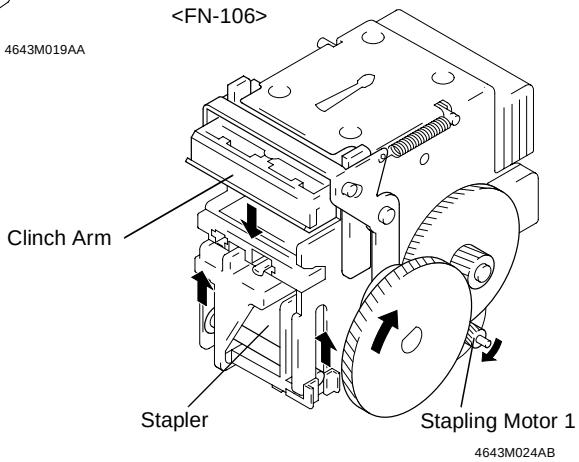

	CONTROL SIGNAL	Energized	Deenergized	WIRING DIAGRAM
Stapling Motor 1	PWB-A PJ7A-5, -6	L	L	4-H
	PWB-A PJ7A-7, -8	H	L	
Stapling Motor 2	PWB-A PJ7A-1, -2	L	L	3-H
	PWB-A PJ7A-3, -4	H	L	

9-2. Stapling Unit Moving Mechanism (FN-105)

- Stapling Units 1 and 2 are moved by the Stapling Unit Moving Motor.
- The Staple Home Position Sensor detects Stapling Units 1 and 2 at their respective home positions. Each of the two Stapling Units is moved with reference to this home position.

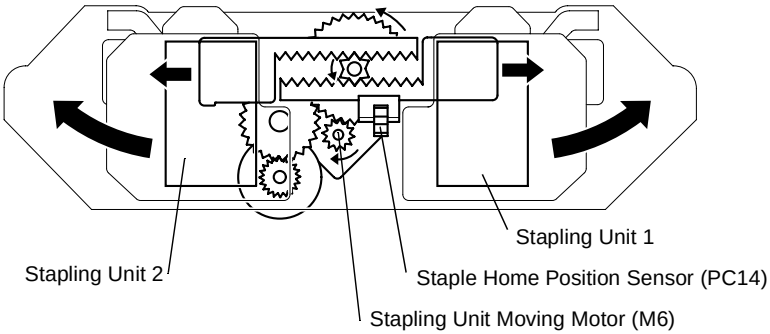

4643M020AE

	CONTROL SIGNAL	Energized	Deenergized	WIRING DIAGRAM
M6	PWB-A PJ10A-1~-4	Pulse output		4-A

	CONTROL SIGNAL	Blocked	Unblocked	WIRING DIAGRAM
PC14	PWB-A PJ22A-3	H	L	7-I

9-3. Staple Sheet Empty Detection

- The Staple Empty Detecting Sensor is used to detect whether there is a staple sheet or not in the Staple Cartridge.
- When there are about 20 staples left in the Staple Cartridge, a staple sheet empty condition results and is displayed as a warning on the control panel of the copier.
- If a staple sheet empty condition is detected during a stapling sequence, that particular sequence is continued until it is completed. A staple empty display is then given.
- After a new Staple Cartridge has been loaded, the Stapling Motor is energized until the Self-Priming Sensor detects loaded staples (L), thereby feeding the staple sheet to the stapling position.

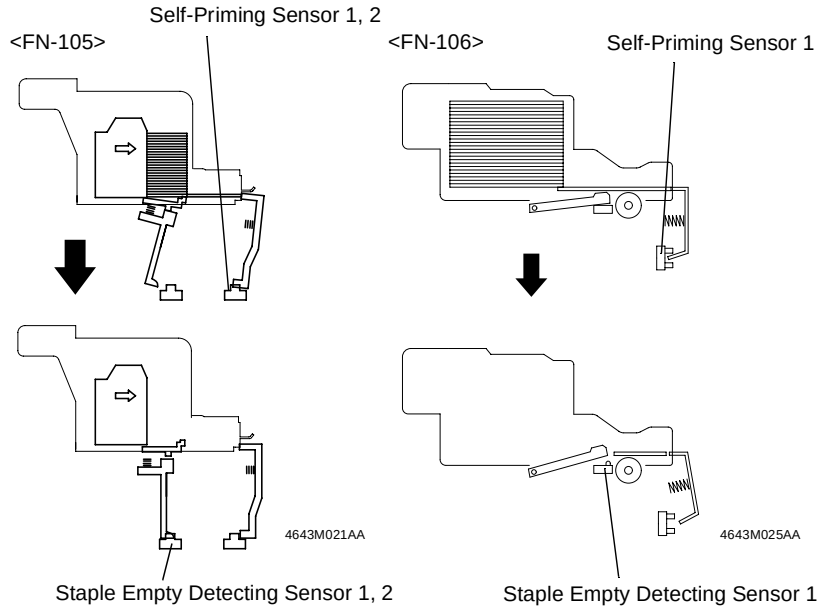

	CONTROL SIGNAL	Blocked	Unblocked	WIRING DIAGRAM
Staple Empty Detecting Sensor 1	PWB-A PJ23A-4	L	H	4-H
Staple Empty Detecting Sensor 2	PWB-A PJ24A-4	L	H	3-H
Self-Priming Sensor 1	PWB-A PJ23A-3	L	H	4-H
Self-Priming Sensor 2	PWB-A PJ24A-3	L	H	3-H

10. ELEVATOR TRAY

- The Elevator Tray moves up or down according to certain conditions.

10-1. Elevator Tray Ascent/Descent Mechanism

- The Elevator Tray is moved up or down by the Elevator Motor that turns forward or backward.

Condition	Elevator Tray	Control
Standby	Stationary at the upper limit position.	The position at which the Elevator Tray Upper Limit Sensor PQ (PWB-D) detects the Elevator Tray.
Paper fed into tray	Lowers to the lower limit position depending on the number of sheets of paper to be fed into the tray.	If the Elevator Tray Upper Limit Sensor PQ (PWB-D) is activated while paper is being fed into the tray, the tray is lowered until the sensor is deactivated.
Paper removed from tray	Moves up to the upper limit position.	If the Elevator Tray Paper Detecting Sensor (PC8) is unblocked when paper is removed from the tray, the tray is raised until the sensor is blocked.
Overload detected	Moves down and then up after paper has been fed into tray.	Lowers the tray for a given period of time, then raises it to the upper limit position. If an overcurrent is detected in the Elevator Motor during this period, the following message appears on the control panel of the copier: “Copies have been left in the Offset Tray. Remove all copies.”

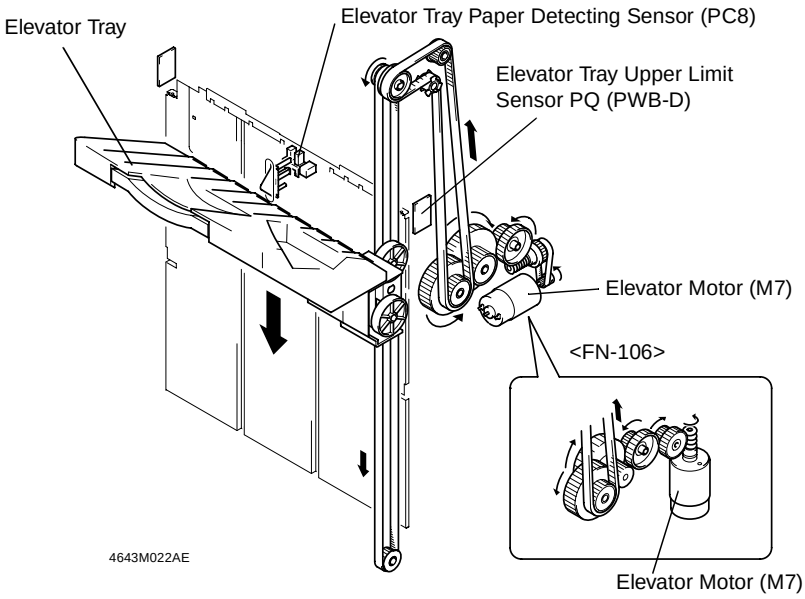

	CONTROL SIGNAL	Ascent	Descent	Stop	WIRING DIAGRAM
M7	PWB-A PJ5A-1	H	L	L	2-D
	PWB-A PJ5A-2	L	H	L	

10-2. Elevator Tray Shifting Mechanism

- When in the Sort mode, the Elevator Tray is moved to the front and rear by a motor to stack copy sets in a sawtooth manner so that each copy set is offset with respect to the others.
- The Shift Home Position Sensor detects the Elevator Tray at its home position.

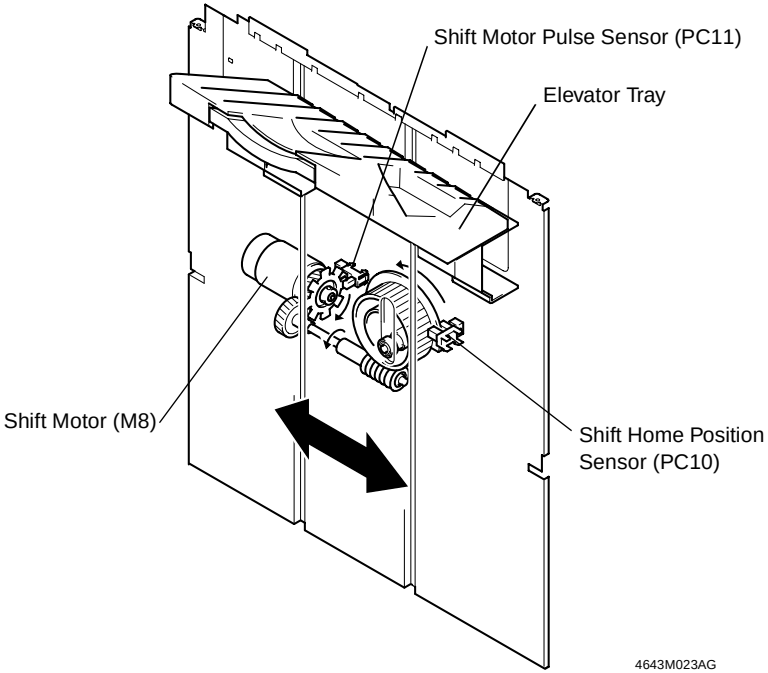

	CONTROL SIGNAL	Energized	Deenergized	WIRING DIAGRAM
M8	PWB-A PJ5A-4	Pulse output	L	2-D

	CONTROL SIGNAL	Blocked	Unblocked	WIRING DIAGRAM
PC10	PWB-A PJ25A-12	H	L	2-H
PC11	PWB-A PJ25A-14	L	H	

SWITCHES ON PWB, TEST MODE

1. SWITCHES ON PWB

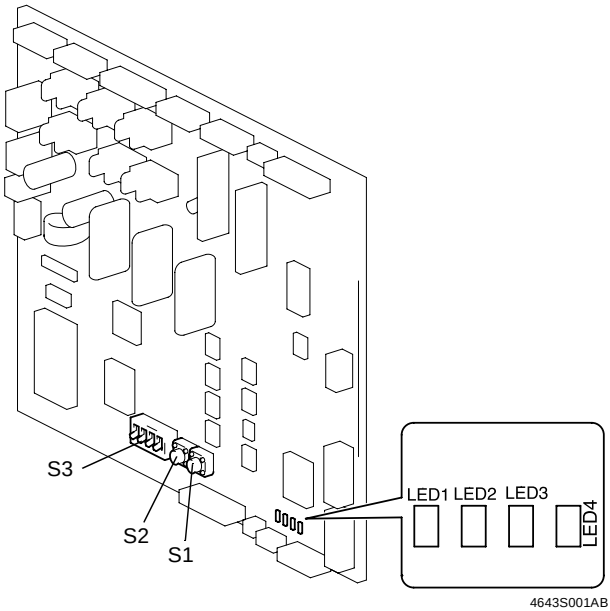

S1	Used to run the Test Mode operation.
S2	
S3	DIP switch used to set the Test Mode operation.
LED1~4	Turn ON or OFF, or blink to indicate a specific condition during Test Mode operations.

2. TEST MODE

2-1. Test Mode Setting Procedure

<Setting Procedure>

1. Turn OFF the Power Switch of the copier.
2. Flip keys of the DIP switch into the ON or OFF position as necessary. (See Table below.)
3. Turn ON the Power Switch of the copier.
4. This sets the Finisher into the corresponding Test Mode operation.

<Resetting Procedure>

- Flip all keys of the DIP switch to their respective initial positions and turn OFF, then ON, the Power Switch of the copier.

2-2. Test Mode Operations

Test Mode Operation	DIP Switch (S3)				LED			
	1	2	3	4	1	2	3	4
Online					❍	❍	❍	●
1st Tray exit	ON				●	❍	❍	❍
Elevator Tray exit		ON			❍	●	❍	❍
Finisher Tray exit	ON	ON			●	●	❍	❍
Shifting operation	ON		ON		●	❍	●	❍
Aligning Plate operation		ON	ON		❍	●	●	❍
Stapling Unit CD movement	ON	ON	ON		●	●	●	❍
Exit Roller/Rolls spacing				ON	❍	❍	❍	●
Storage Roller/Rolls spacing	ON			ON	●	❍	❍	●
Elevator Tray operation		ON		ON	❍	●	❍	●
Hole Punch operation (FN-105)	ON	ON		ON	●	●	❍	●
Hole position selection (FN-105)			ON	ON	❍	❍	●	●
Sensor test	ON		ON	ON	Indicates sensor state			

●: Blinking ❍: OFF

✻ Whenever the Control Board (PWB-A) is to be replaced, take note of the initial positions of all keys of the DIP switch. After the replacement procedure has been completed, be sure to flip all keys of the DIP switch on the new Control Board (PWB-A) to their respective initial positions.

2-3. Operation in Each Test Mode Operation

(1) 1st Tray Exit

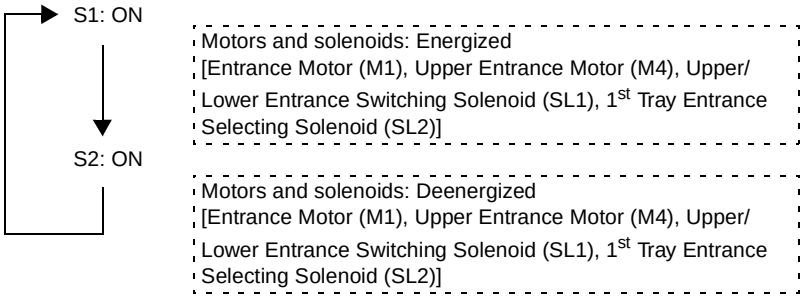

(2) Elevator Tray Exit

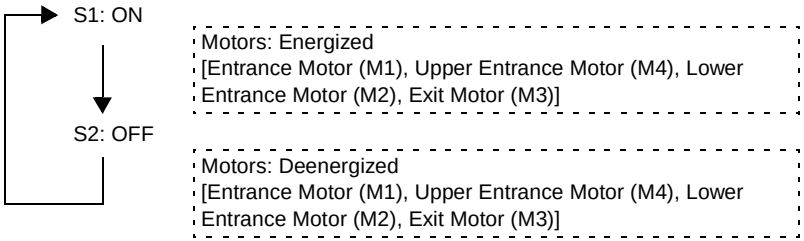

(3) Finisher Tray Exit

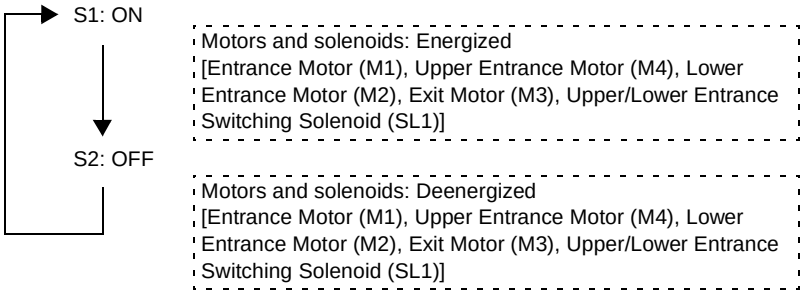

(4) Shifting Operation

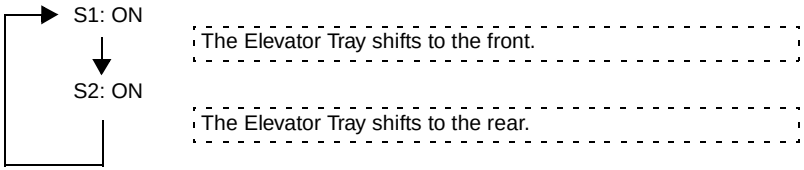

(5) Aligning Plate Operation

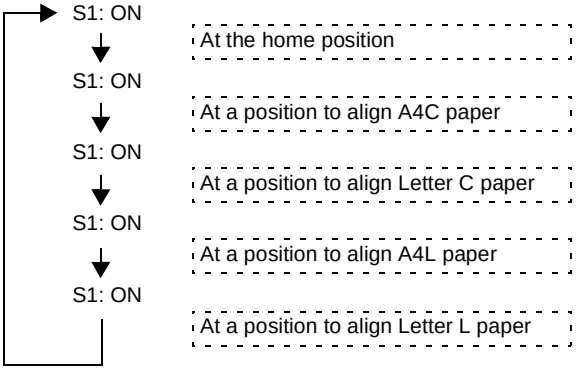

(6) Stapling Unit CD Movement

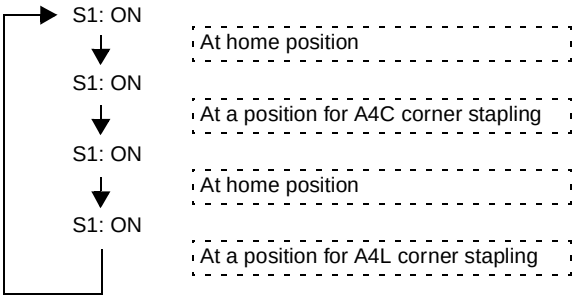

(7) Exit Roller/Rolls Spacing

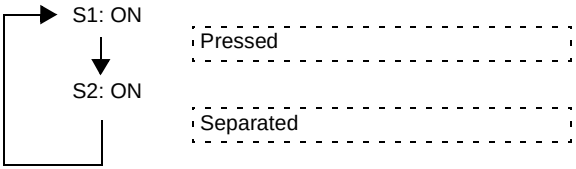

(8) Storage Roller/Rolls Spacing

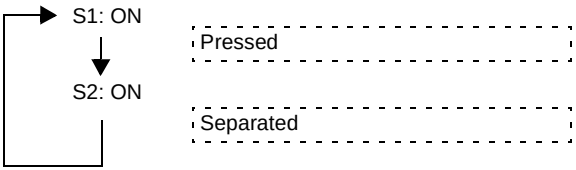

(9) Elevator Tray Operation

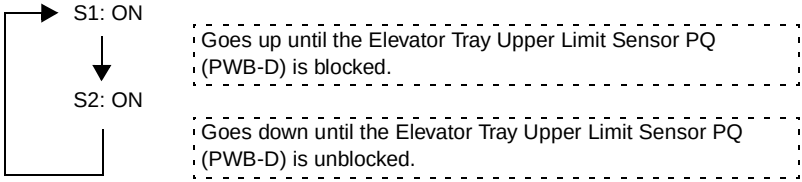

(10) Hole Punch Operation (FN-105)

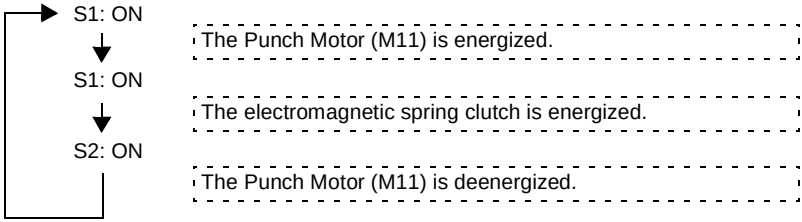

(11) Hole Position Selection (FN-105) U.S.A. and Canada

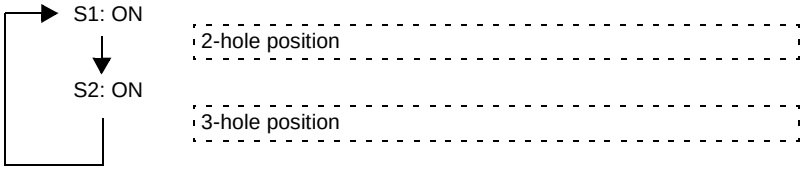

(12) Sensor Test

Sensor	State	LED			
		1	2	3	4
Elevator Tray Upper Limit Sensor PQ (PWB-D)	Unblocked	❍	❍	❍	●
Storage Sensor (PC3)	Blocked	❍	❍	●	❍
Lower Entrance Sensor (PC2)	Blocked	❍	●	❍	❍
Upper Entrance Sensor (PC4)	Blocked	●	❍	❍	❍

●: ON ❍: OFF

DIS/REASSEMBLY, ADJUSTMENT

1. DISASSEMBLY AND REASSEMBLY

1-1. Maintenance Schedule

- To ensure good copies and an extended service life of the Finisher, it is recommended that the maintenance jobs described in this schedule be carried out.

PM Parts	Cleaning (K)	Tools Used for Cleaning	Possible Malfunction	PM Counter
Rollers/Rolls	300	Alcohol, water	Transport failure	Cleaning 2
Paddles	300	Alcohol, water	Transport failure	Cleaning 2

NOTES

1. This information is subject to change without notice.
2. K = 1,000 copies
3. Upon PM service, check the Punch Trash Box and dump trash as may be necessary.

1-2. Removal of the Exterior Parts

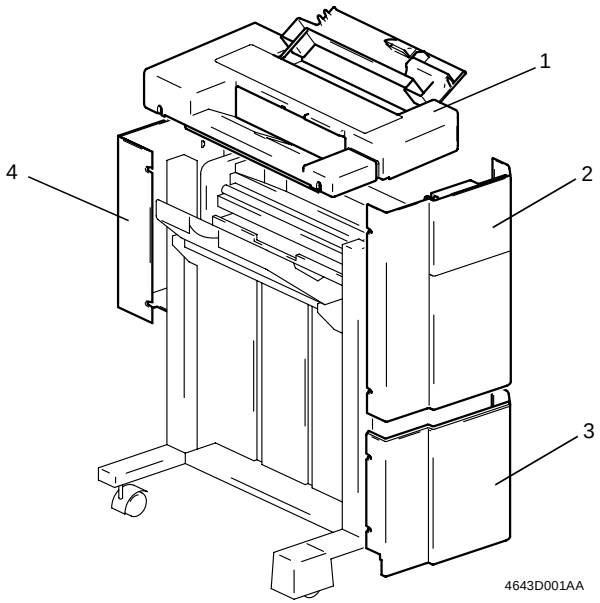

No.	Part Name	Removal Procedure
1	Upper Cover	Open the Misfeed Clearing Cover and remove one screw; then loosen three screws and take off the cover.
2	Upper Front Cover	Loosen four screws and take off the cover.
3	Lower Front Cover	Loosen two screws and take off the cover.
4	Rear Cover	Remove one screw, loosen three screws, and take off the cover.

1-3. Removal of the Punch Unit

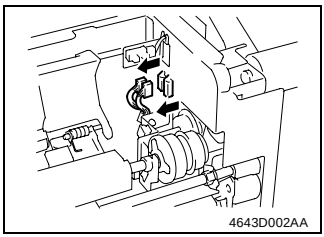

1. Remove the Upper Cover.
2. Unplug two connectors.

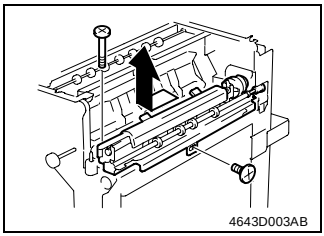

3. Remove two screws and the Punch Unit.

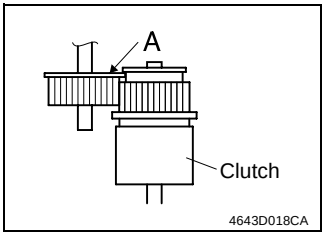

NOTE

When reinstalling the Punch Unit, ensure that part A of the gear on the Finisher fits into the slit in the gear of the Punch Unit.

1-4. Removal of the Stapling Unit

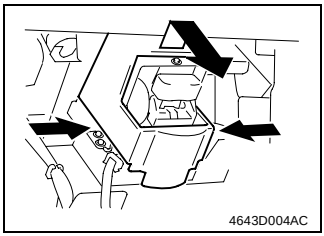

1. Holding both sides of the cover, lift the cover up and take it off.

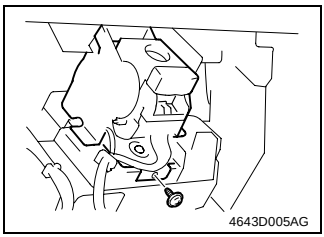

2. Remove one screw and remove the Stapling Unit from the moving cradle.
3. Remove the screw, unplug the connector, and remove the Stapling Unit.

2. ADJUSTMENTS

2-1. Check and Adjustment of the Hole Punch Positions

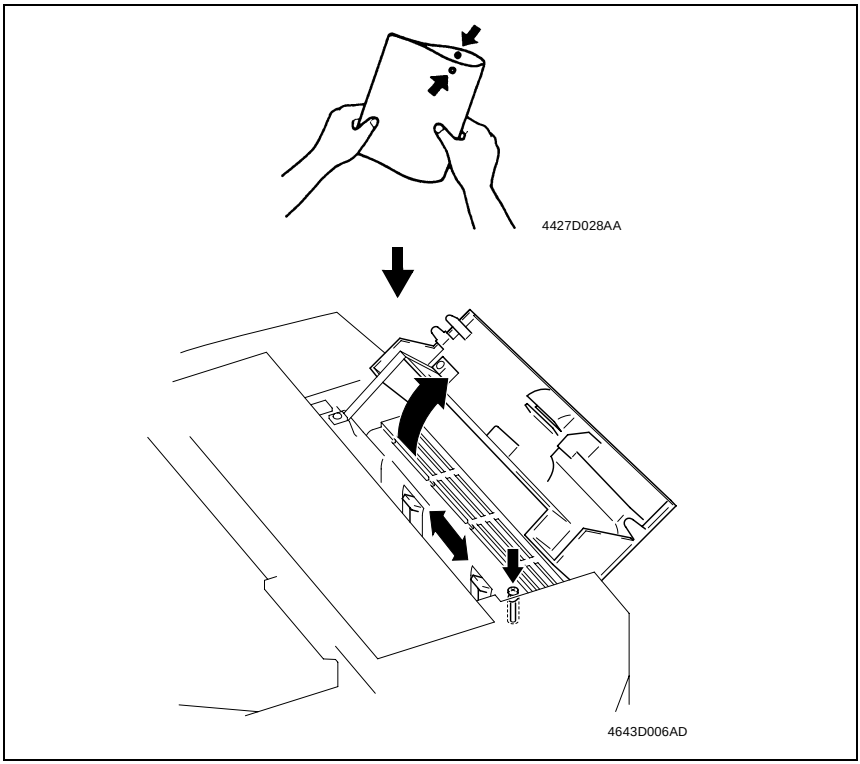

1. Set the copier into the Hole Punch mode and make a 1-sided copy from a 1-sided original.
2. Fold the copy in half and check to see if the holes are aligned (deviation should be within 2 mm).
3. If the holes are misaligned, loosen the screw that secure the Punch Unit and slide the Punch Unit as necessary.
4. Make a copy again and check for correct hole positions.

2-2. Adjustment of Punch Loop Length

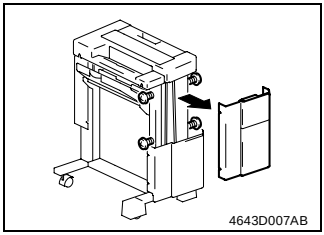

1. Loosen four screws and remove the Upper Front Cover.

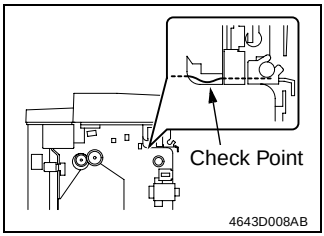

2. Set the copier into the Hole Punch mode and make several 1-sided copies from a 1-sided original.
3. Visually check the loop length in the copy.

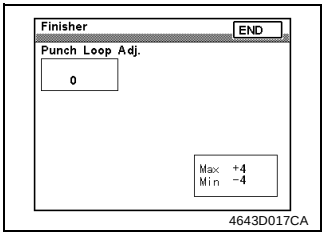

4. Select “Tech. Rep. Mode” → “Finisher” → “Punch Loop Adj.”
5. Press the Clear key to clear the current setting value.
6. Enter the setting value from the 10-Key Pad (±4).

✻ For a greater loop length, increase the setting value.
✻ For a smaller loop length, decrease the setting value.

2-3. Adjustment of the Solenoids

(1) Adjustment of the Upper/Lower Entrance Switching Solenoid (SL1)

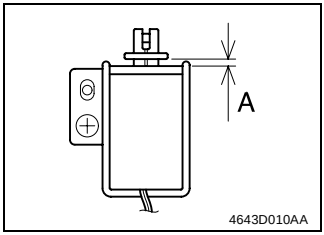

1. Loosen one screw that secures the solenoid in position.
2. Move the solenoid up or down and, when dimension A measures 4.4 mm, tighten the screw.

(2) Adjustment of the 1st Tray Entrance Selecting Solenoid (SL2)

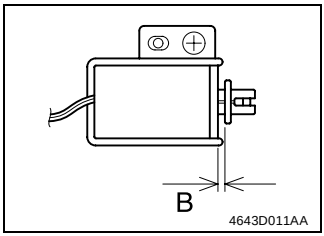

1. Loosen one screw that secures the solenoid in position.
2. Move the solenoid to the right or left and, when dimension B measures 3.6 mm, tighten the screw.

2-4. Timing Belt Tension Adjustment

(1) Adjustment of the Upper Entrance Motor (M4) Timing Belt

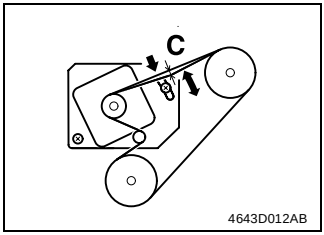

1. Loosen two screws.
2. Move the mounting bracket and, when the belt deflects 4 mm at C, tighten the two screws.

(2) Adjustment of the Lower Entrance Motor (M2) Timing Belt

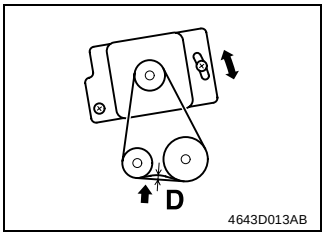

1. Loosen two screws.
2. Move the mounting bracket and, when the belt deflects 2 mm at D, tighten the two screws.

(3) Adjustment of the Exit Motor (M3) Timing Belt

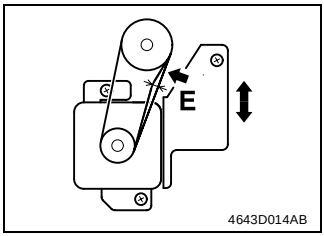

1. Loosen three screws.
2. Move the mounting bracket and, when the belt deflects 3 mm at E, tighten the three screws.

2-5. Adjustment of the Elevator Tray Upper Limit Sensor

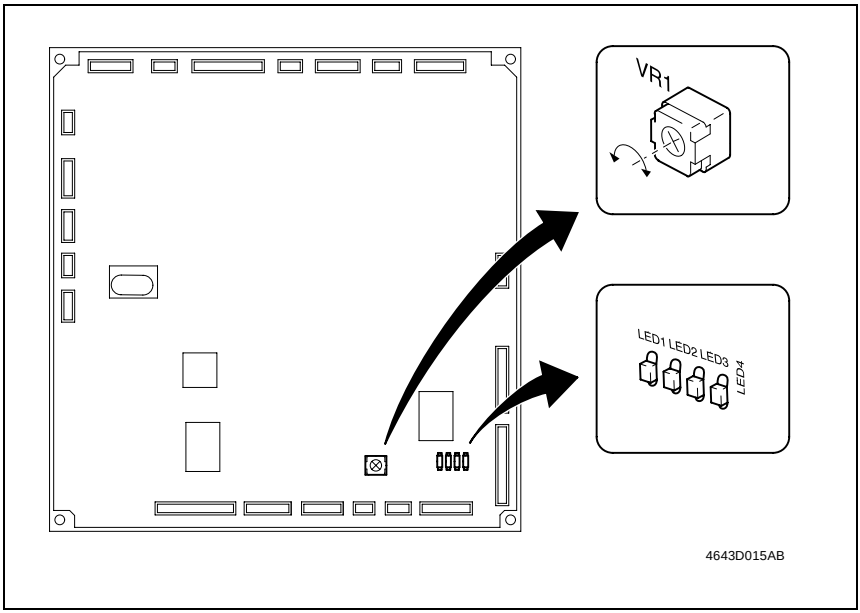

1. Set up the sensor test mode.
2. Turn VR1 on PWB-A fully counterclockwise.
3. Using a sheet of paper, block the Elevator Tray Upper Limit Sensor LED (PWB-C).
4. Check that LED4 on PWB-A turns OFF. If it stays ON, slowly turn VR1 clockwise and stop turning it as soon as the LED turns OFF.

TROUBLESHOOTING

1. SENSOR CHECK

- To permit easy and safe checks of sensors, the sensor input data are checked when the copier and the Finisher are in the standby state (including a misfeed, malfunction, and closure failure condition), thereby determining if correct signals are properly input to the sensors.

1-1. Sensor Check Screen

- The following screens are only typical and port data may look differently on actual copiers.

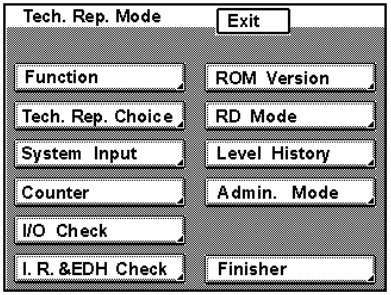

4643T002CA

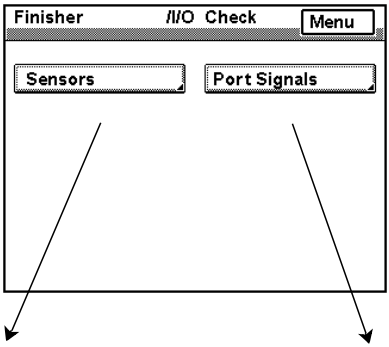

4643T003CA

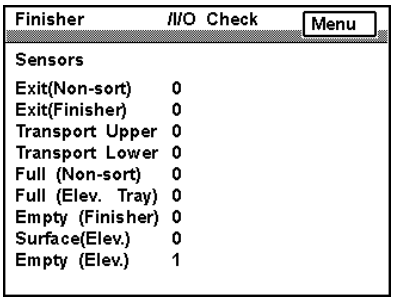

4643T004CA

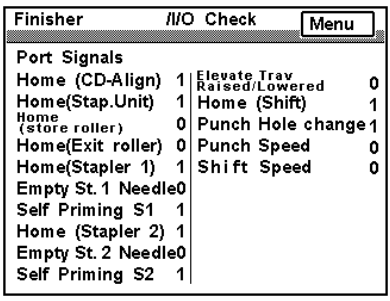

4643T005CA

1-2. Sensor Check List

<Sensors>

Symbol	Panel Display	Signal Name	Operation Characteristics/Panel Display		Input Board	IC No.	Port No.	CN/PJ No.
			1	0				
PC1	Exit (Non-sort)	1st Tray Exit Sensor	Paper present	Paper not present	Control Board (PWB-A)	IC26	PC4	PJ19A-6
PC3	Exit (Finisher)	Storage Sensor	Paper present	Paper not present		IC20	PD0	PJ20A-3
PC4	Transport Upper	Upper Entrance Sensor	Paper present	Paper not present		IC26	PE6	PJ20A-9
PC2	Transport Lower	Lower Entrance Sensor	Paper present	Paper not present		IC26	PE7	PJ19A-8
PC6	Full (Non-sort)	1st Tray Full Detecting Sensor	Blocked	Unblocked		IC26	PC5	PJ19A-3
PC7	Full (Elev. Tray)	Elevator Tray Full Detecting Sensor	Blocked	Unblocked		IC26	PA7	PJ19A-12
PC5	Empty (Finisher)	Finisher Tray Paper Detecting Sensor	Paper present	Paper not present		IC26	PD1	PJ25A-2
PWB-D	Surface (Elev.)	Elevator Tray Upper Limit Sensor PQ	Paper present	Paper not present		IC26	PA6	PJ21A-2
PC8	Empty (Elev.)	Elevator Tray Paper Detecting Sensor	Blocked	Unblocked		IC26	PA5	PJ25A-9

<Port Signals>

Symbol	Panel Display	Signal Name	Operation Characteristics/Panel Display		Input Board	IC No.	Port No.	CN/PJ No.
			1	0				
PC9	Home (CD-Align)	CD Aligning Home Position Sensor	Blocked	Unblocked	Control Board (PWB-A)	IC26	PD2	PJ25A-6
PC14	Home (Stap. Unit)	Staple Home Position Sensor	Blocked	Unblocked		IC26	PD3	PJ22A-3
PC12	Home (Store roller)	Storage Roller Home Position Sensor	Blocked	Unblocked		IC26	PC6	PJ20A-6
PC13	Home (Exit roller)	Exit Rolls Home Position Sensor	Blocked	Unblocked		IC26	PC7	PJ19A-15
–	Home (Stapler 1)	Stapler Home 1	Blocked	Unblocked		IC1	P71, ANI1	PJ23A-2
–	Empty St.1 Needle	Staple Empty 1	Blocked	Unblocked		IC1	P72, ANI2	PJ23A-4
–	Self Priming S1	Stapler Self-Priming 1	Blocked	Unblocked		IC1	P73, ANI3	PJ23A-3
–	✻Home (Stapler 2)	Stapler Home 2	Blocked	Unblocked		IC1	P75, ANI5	PJ24A-2
–	✻Empty St. 2 Needle	Staple Empty 2	Blocked	Unblocked		IC1	P76, ANI6	PJ24A-4
–	✻Self Priming S2	Stapler Self-Priming 2	Blocked	Unblocked		IC1	P77, ANI7	PJ24A-3
S2 S3	Elevate Tray Raised/ Lowered	Elevator Tray Upper Limit Switch, Elevator Tray Lower Limit Switch	At upper limit	At a position other than upper limit		–	–	PJ4A-4
PC10	Home (Shift)	Shift Home Position Sensor	Blocked	Unblocked		IC26	PD4	PJ25A-12
–	✻Punch Hole change	———	2 holes	3 holes		IC28	PE2	PJ12A-3
PC15	✻Punch Speed	Punch Motor Pulse Sensor	Blocked	Unblocked		IC1	P21, INTP0	PJ13A-8
PC11	Shift Speed	Shift Motor Pulse Sensor	Blocked	Unblocked		IC1	P24, INTP3	PJ25A-14

✻ : FN-105 only

✻Punch Hole change: U.S.A. and Canada

1-3. Sensor Check Procedure

1. When a misfeed or malfunction occurs, select “Tech. Rep. Mode” → “Finisher” → “I/O Check” → “Sensors” or “Port Signals.”
2. Check the input of the sensor that is probably faulty.

[Example] The 1st Tray Exit Sensor is probably responsible for a paper transport misfeed:
<Procedure>

1. Clear the misfeed and reset the misfeed condition.
2. Select “Tech. Rep. Mode” → “Finisher” → “I/O Check” → “Sensors.”
3. Check that the data for “Exit (Non-sort)” on the screen is “0.”
4. Check that the data changes from “0” to “1” when the 1st Tray Exit Sensor (PC1) is blocked.

1: PC1 is operational; 0: PC1 is faulty

2. MISFEED DETECTION AND TROUBLESHOOTING PROCEDURES

2-1. Misfeed Detecting Sensor Layout

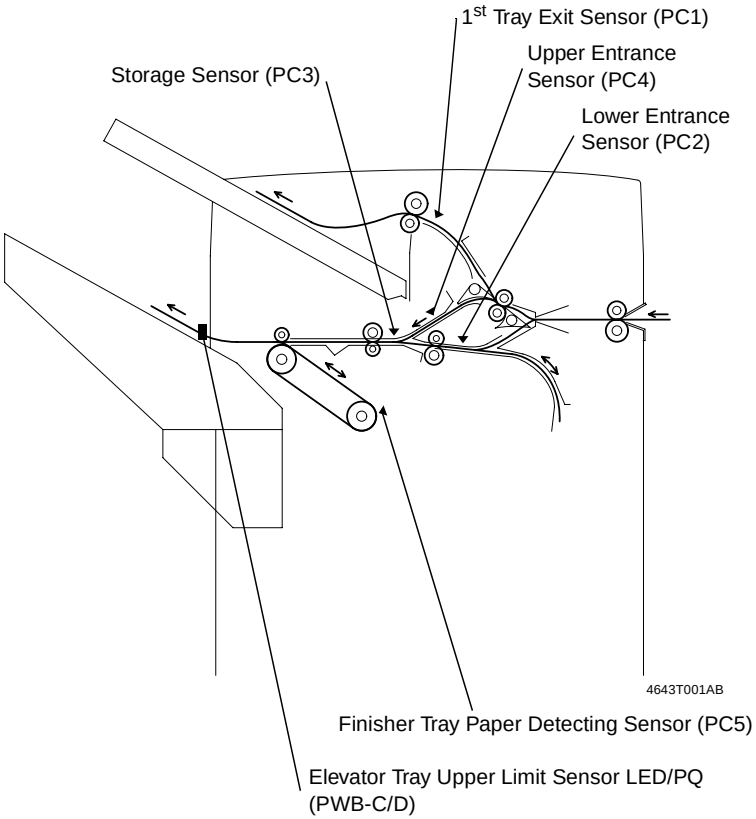

2-2. Misfeed Detection

- When a misfeed occurs, the Touch Panel of the copier gives a message and shows the locations where the misfeed has occurred and paper is located.

Misfeed location	Blinking
Paper location	ON

- The misfeed display can be reset by unlocking and sliding the Finisher away from the copier, and the sliding the Finisher back against the copier.

Type	Detection Timing
Transport misfeed	• The 1st Tray Exit Sensor (PC1) is not blocked even after the lapse of a given period of time after the leading edge of the paper has unblocked the Paper Exit Sensor of the copier. • The Upper Entrance Sensor (PC4) is not blocked even after the lapse of a given period of time after the leading edge of the paper has unblocked the Paper Exit Sensor of the copier. • The Lower Entrance Sensor (PC2) is not blocked even after the lapse of a given period of time after the leading edge of the paper has unblocked the Paper Exit Sensor of the copier. • The Storage Sensor (PC3) is not unblocked even after the lapse of a given period of time after the Upper Entrance Sensor (PC4) has been blocked. • The Storage Sensor (PC3) is not unblocked even after the lapse of a given period of time after the Lower Entrance Sensor (PC2) has been blocked.
Misfeed at the 1st Tray exit	• The 1st Tray Exit Sensor (PC1) is not unblocked even after the lapse of a given period of time after it has been blocked.
Misfeed at the Elevator Tray exit	• The Storage Sensor (PC3) is not unblocked even after the lapse of a given period of time after it has been blocked.
Paper stack exit misfeed	The Finisher Tray Paper Detecting Sensor (PC5) remains activated when a copy stack, which has been stapled together, is fed out.
Staple misfeed	The Staple Home Position Sensor (PC14) is not blocked even after the lapse of a given period of time after the Stapling Motor has started turning forward, and the sensor is blocked within a given period of time after the Stapling Motor has thereafter started turning backward.

2-3. Misfeed Troubleshooting Procedures

(1) Transport misfeed

Step	Check	Result	Action
1	Paper meets specifications.	NO	Change paper.
2	Paper is curled, wavy, or damp.	YES	Change paper. Instruct user in how to store paper.
3	Foreign object on paper path, or dirty or deformed paper path.	YES	Clean or change.
4	Dirty, deformed, or worn roller or roll.	YES	Clean or change.
5	Entrance Motor (M1) turns after Start key has been pressed.	NO	Change M1 or PWB-A.
6	Upper Entrance Motor (M4) turns after Start key has been pressed.	NO	Change M4 or PWB-A.
7	Lower Entrance Motor (M2) turns after Start key has been pressed.	NO	Change M2 or PWB-A.
8	Upper Entrance Sensor (PC4) I/O Check: Transport Upper of Sensors	NO	Correct actuator. Change PC4.
9	Lower Entrance Sensor (PC2) I/O Check: Transport Lower of Sensors	YES	Change PWB-A.
		NO	Correct actuator. Change PC2.
10	Storage Sensor (PC3) I/O Check: Exit (Finisher) of Sensors	YES	Change PWB-A.
		NO	Correct actuator. Change PC3.

(2) Misfeed at the 1st Tray exit

Step	Check	Result	Action
1	Paper meets specifications.	NO	Change paper.
2	Paper is curled, wavy, or damp.	YES	Change paper. Instruct user in how to store paper.
3	Foreign object on paper path, or dirty or deformed paper path.	YES	Clean or change.
4	Dirty, deformed, or worn roller or roll.	YES	Clean or change.
5	1st Tray Exit Sensor (PC1) I/O Check: Exit (Non-sort) of Sensors	YES	Change PWB-A.
		NO	Correct actuator. Change PC1.

(3) Misfeed at the Elevator Tray exit

Step	Check	Result	Action
1	Paper meets specifications.	NO	Change paper.
2	Paper is curled, wavy, or damp.	YES	Change paper. Instruct user in how to store paper.
3	Foreign object on paper path, or dirty or deformed paper path.	YES	Clean or change.
4	Dirty, deformed, or worn roller or roll.	YES	Clean or change.
5	Exit Motor (M3) turns after Start key has been pressed.	NO	Change M3 or PWB-A.
6	Storage Sensor (PC3) I/O Check: Exit (Finisher) of Sensors	YES	Change PWB-A.
		NO	Change PC3.

(4) Paper stack exit misfeed

Step	Check	Result	Action
1	Paper meets specifications.	NO	Change paper.
2	Paper is curled, wavy, or damp.	YES	Change paper. Instruct user in how to store paper.
3	Foreign object on paper path, or dirty or deformed paper path.	YES	Clean or change.
4	Dirty, deformed, or worn roller or roll.	YES	Clean or change.
5	Exit Motor (M3) turns after Start key has been pressed.	NO	Change M3 or PWB-A.
6	Finisher Tray Paper Detecting Sensor (PC5) I/O Check: Empty (Finisher) of Sensors	YES	Change PWB-A.
		NO	Change PC5.

(5) Staple misfeed

Step	Check	Result	Action
1	Stapling Motor is overloaded.	YES	Check drive couplings.
		NO	Change Stapling Unit or PWB-A.

3. MALFUNCTION DETECTION AND TROUBLESHOOTING PROCEDURES

3-1. Malfunction Detection

- Any of the following operation faults can be detected and the corresponding malfunction code is displayed on the copier Touch Panel.
- The malfunction detection can be reset by opening and closing the Front Door of the copier.

Malfunction Code	Description	Detection Timing
C0B20	Stapling Unit Moving Motor (M6) drive malfunction	The Staple Home Position Sensor (PC14) does not go HIGH even after the lapse of a given period of time after M6 has been energized (to return the Stapling Unit to its home position).
C0B30	CD Aligning Motor (M5) drive malfunction	The CD Aligning Home Position Sensor (PC9) does not go LOW even after the lapse of a given period of time after M5 has been energized (to return the Aligning Plate to its home position).
C0B48	Exit Roller/Rolls Spacing Motor (M13) drive malfunction	The Exit Rolls Home Position Sensor (PC13) does not go HIGH even after the lapse of a given period of time after M13 has been energized (to start spacing/pressure sequence).
C0B4A	Storage Roller/Rolls Spacing Motor (M12) drive malfunction	The Storage Roller Home Position Sensor (PC12) does not go HIGH even after the lapse of a given period of time after M12 has been energized (to start spacing/pressure sequence).
C0B50	Stapling Motor 1 drive malfunction	Stapling Motor 1 is not deenergized even after the lapse of a given period of time after it has been energized (to start a stapling sequence).
✻C0B54	Stapling Motor 2 drive malfunction	Stapling Motor 2 is not deenergized even after the lapse of a given period of time after it has been energized (to start a stapling sequence).
✻C0B73	Punch Motor (M11) drive malfunction	The Punch Motor Pulse Sensor (PC15) does not go from LOW to HIGH, or vice versa, even after the lapse of a given period of time after M11 has been energized.
✻C0B78	Hole Position Selector Motor (M14) drive malfunction (U.S.A. and Canada)	The Hole Punch Position Switch (S4) is not actuated or deactuated even after the lapse of a given period of time after M14 has been energized.
C0B80	Shift Motor (M8) drive malfunction	• The Shift Home Position Sensor (PC10) does not go HIGH even after the lapse of a given period of time after M8 has been energized (to start returning the Elevator Tray to its home position). • The Shift Home Position Sensor (PC10) does not go LOW even after the lapse of a given period of time after M8 has been energized (to start moving the Elevator Tray for job offset).
C0BA0	Elevator Motor (M7) drive malfunction	• The Elevator Tray Upper Limit Sensor PQ (PWB-D) is not activated even after the lapse of a given period of time after M7 has been energized (to start raising the Elevator Tray). • The Elevator Tray Upper Limit Switch (S2) or Elevator Tray Lower Limit Switch (S3) is actuated after M7 has been energized.

✻ : FN-105 only

3-2. Malfunction Troubleshooting Procedures

(1) C0B20

Step	Check	Result	Action
1	Staple Home Position Sensor (PC14) I/O Check: Home (Stap. Unit) of Port Signals	NO	Change PC14.
2	Turn OFF the Power Switch, move the Stapling Unit out of its home position, and turn ON the Power Switch. Drive of the Stapling Unit Moving Motor (M6) at this time	YES	Change PWB-A.
		NO	Change M6 or PWB-A.

(2) C0B30

Step	Check	Result	Action
1	CD Aligning Home Position Sensor (PC9) I/O Check: Home (CD Align) of Port Signals	NO	Change PC9.
2	Turn OFF the Power Switch, move the Aligning Plate out of its home position, and turn ON the Power Switch. Drive of the CD aligning Motor (M6) at this time	YES	Change PWB-A.
		NO	Change M5 or PWB-A.

(3) C0B48

Step	Check	Result	Action
1	Exit Rolls Home Position Sensor (PC13) I/O Check: Home (Exit roller) of Port Signals	NO	Change PC13.
2	Drive of the Exit Roller/Rolls Spacing Motor (M13) when the Power Switch is turned OFF and ON	YES	Change PWB-A.
		NO	Change M13 or PWB-A.

(4) C0B4A

Step	Check	Result	Action
1	Storage Roller Home Position Sensor (PC12) I/O Check: Home (Store roller) of Port Signals	NO	Change PC12.
2	Drive of the Storage Roller/Rolls Spacing Motor (M12) when the Power Switch is turned OFF and ON	YES	Change PWB-A.
		NO	Change M12 or PWB-A.

(5) C0B50

Step	Check	Result	Action
1	Stapling Motor 1 is overloaded.	YES	Check drive coupling.
		NO	Change Stapling Unit 1 or PWB-A.

(6) C0B54 (FN-105)

Step	Check	Result	Action
1	Stapling Motor 2 is overloaded.	YES	Check drive coupling.
		NO	Change Stapling Unit 2 or PWB-A.

(7) C0B73 (FN-105)

Step	Check	Result	Action
1	Punch Motor Pulse Sensor (PC15) I/O Check: Punch Speed of Port Signals	NO	Change PC15.
2	Punch Motor (M11) operation: The voltage across PJ6A-2 on PWB-A and GND change from DC24V to DC0V after the Start key has been pressed in the Punch mode.	YES	Change M11.
		NO	Change PWB-A.

(8) C0B78 (FN-105): U.S.A. and Canada

Step	Check	Result	Action
1	Drive of the Hole Position Selector Motor (M14) when the Punch Hole positions are changed	YES	Change Punch Unit.
		NO	Change Punch Unit or PWB-A.

(9) C0B80

Step	Check	Result	Action
1	Shift Home Position Sensor (PC10) I/O Check: Home (Shift) of Port Signals	NO	Change PC10.
2	Shift Motor Pulse Sensor (PC11) I/O Check: Shift Speed of Port Signals	NO	Change PC11.
3	Shift Motor (M8) operation: The voltage across PJ5A-4 on PWB-A and GND change from LOW to HIGH after the Start key has been pressed in the Sort mode.	YES	Change M8.
		NO	Change PWB-A.

(10) C0BA0

Step	Check	Result	Action
1	Elevator Tray Upper Limit Sensor PQ (PWB-D) I/O Check: Surface (Elev.) of Sensors	NO	Change PWB-C or PWB-D.
2	Elevator Tray Upper Limit Switch (S2) I/O Check: Elevate Tray Raised/Lowered of Port Signals	NO	Change S2.
3	Elevator Tray Lower Limit Switch (S3) I/O Check: Elevate Tray Raised/Lowered of Port Signals	NO	Change S3.
4	Elevator Motor (M7) operation: The voltage across PJ5A-1 on PWB-A and GND (when the Elevator Tray goes down) and that across PJ5A-2 on PWB-A and GND (when the Elevator Tray goes up) goes from LOW to HIGH after the Start key has been pressed in the Sort mode.	YES	Change M7.
		NO	Change PWB-A.

DT-105

SERVICE MANUAL

CONTENTS

1. INTRODUCTION M-1
   1-1. HEART SYSTEM Basic System Diagram M-1
      (1) Applicable Machine Models M-1
      (2) Telephone Line Connection Diagrams M-2
   1-2. Benefits Attributed to the Use of the HEART SYSTEM M-3
      (1) Services M-3
      (2) Users M-3
   1-3. Operating Precautions M-3
2. SPECIFICATIONS M-4
3. EXTERIOR VIEW M-5
4. TYPES OF REPORT AND TRANSMITTING/RECEIVING DATA M-6
   4-1. Types and Details of Reports M-6
   4-2. Types of Reports by Receiving Party (Center) M-6
   4-3. Transmitting/Receiving Data for Each Report M-7
5. TECH. REP. MODE M-9
6. OPERATING PROCEDURES M-11
   6-1. Initial Setting M-11
   6-2. Upon Calling on User (Connected to Maintenance Center) M-11
   6-3. Second Initial Setting M-11
      (1) Initializing the DT-105 (★ only when the DT-105 has been replaced) M-11
      (2) Initializing the machine (SMART) M-11
7. TROUBLESHOOTING DURING DATA TRANSMISSION M-12

1. INTRODUCTION

1-1. HEART SYSTEM Basic System Diagram

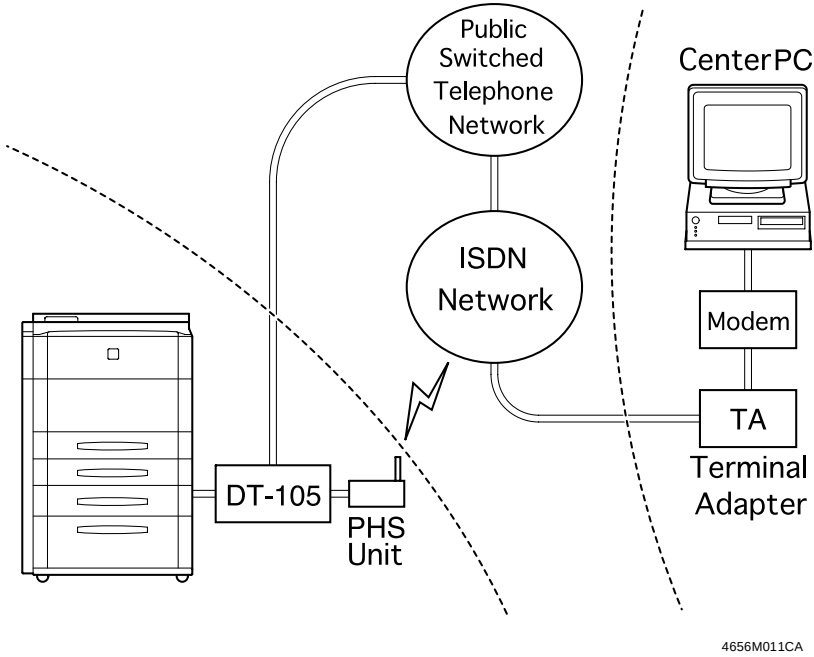

(1) Applicable Machine Models

Model Name	Di450	Di550			

(2) Telephone Line Connection Diagrams

- Using the leased line

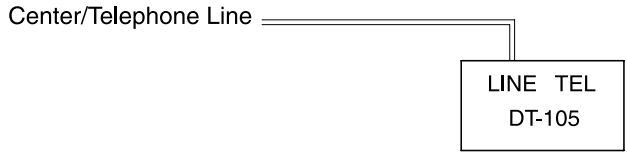

4656M007CA

- Sharing the line with a telephone



4656M008CA

- Sharing the line with a fax

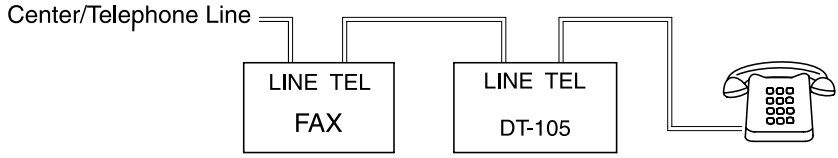

4656M009CA

- Using a PHS Unit

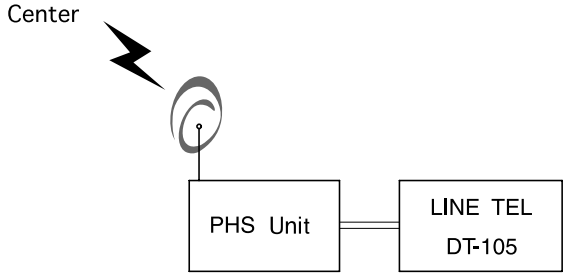

4656M010CA

NOTES:

- *If the user relocates the machine, it is likely that the modular cord is left unplugged. Instruct the user to call their nearest authorized service shop whenever the machine is to be relocated.*
- *When a PHS Unit is connected, be sure to flip key 4 of the DIP switch of the Data Terminal to the OFF position.*

1-2. Benefits Attributed to the Use of the HEART SYSTEM

(1) Services

- A problem can be immediately identified and possible remedial procedures and the part to be replaced are presented to allow the Tech. Rep. to shorten the time required for taking action on the user's premises.
- If the required action is so simple and easy that it does not require a call by the Tech. Rep., a remote-control action is taken from the Center personal computer, thereby reducing the number of calls on the user and shortening downtime.
- Maintenance timing is predicted to reduce the number of calls on the user.
- The number of man-hours required for billing operation can be reduced.
- It is possible to keep track of, and predict, the demand-supply status of consumables, supplies, and replacement parts, which helps improve the control of inventory, ordering, and delivery of supplies and parts.
- Real-time monitoring of machine data makes it possible to obtain data that represents changes in reliability figures.

(2) Users

- Reduces the number of user calls.
- Enables service steps to be taken before the user lodges a complaint.
- Reduces downtime.
- Improves customer satisfaction (CS).

1-3. Operating Precautions

- Whenever performing a repair or service job, be sure to transmit a maintenance start report (ID code entry) to notify the Center of the start of a maintenance job.
- After the job has been completed, be sure to transmit a maintenance end report to notify the Center that the maintenance job has been completed.
- Before replacing the RAM Pack, record all counter values and notify the Center that the RAM Pack is to be replaced (to prevent possible billing operation trouble).

2. SPECIFICATIONS

Configuration	:	Main control unit (CPU), communications control unit (modem), clock, and power supply unit
Interface	:	Connection to a PWB of the machine: DT-105 Connection to the modular connector: Telephone line RS232C connection: For communication with expansion communication unit
Compliance Certification	:	Certified by Japan Approvals Institute for Telecommunications Equipment (JATE)
Operating Environment	:	Same as machine
Power Requirements	:	AC120V (using AC adapter)
Current Consumption	:	80mA (max.)
Dimensions	:	4-1/4 (W) × 6 (D) × 1-1/4 (H)
Weight	:	1/2 lb
Communications Specifications		
Transmission Control Procedure	:	Conforms to the basic mode
Code Length	:	10 bits
Error Checking	:	CRC cyclic code
Retransmission Control	:	Three times when an error is detected and upon a timeout of text transmission
Redial	:	Ten times when a malfunction occurs, a malfunction is reset, a warning occurs, and a warning is reset; five times in other cases. If a transmission is not terminated normally even after the specified number of retransmissions, redialing occurs at the scheduled report on the following day, a closing report, and a new report request, and when the power is turned ON.
Modem Specifications		
Applicable Telephone Line	:	Public switched telephone network, private branch exchange (PBX) network
Dialing Method	:	Pulse, tone
Communications Method	:	Conforms to CCITT V.22 and CCITT V.26
Data Transfer Rate	:	2,400 bps
Automatic Reception	:	Setting is possible to enable or disable this function on the control panel of the machine.
Detection of Telephone on Shared Line in Use	:	Disables transmission when the telephone that shares the line is in use.
Telephone on Shared Line Priority Function	:	Modem is on-hook when the telephone that shares the line is detected to be off-hook.
Clock Specifications		
Battery Life	:	5 years

3. EXTERIOR VIEW

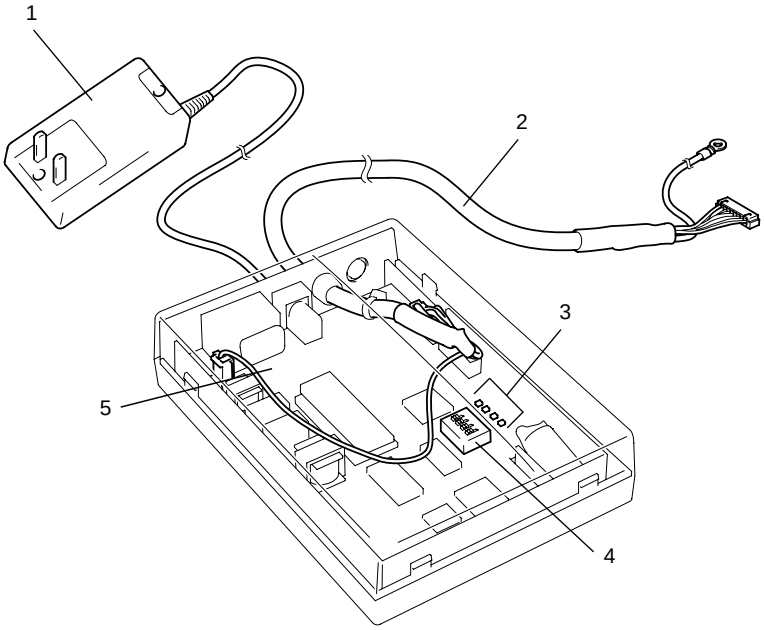

1. AC Power Plug
2. Harness Assy
3. LED
4. DIP Switch
5. Modem Board

4. TYPES OF REPORT AND TRANSMITTING/RECEIVING DATA

4-1. Types and Details of Reports

Report Type	Description
Closing Report	Transmitted on the closing date (time and date) set at the Center.
Scheduled Report	Transmitted at a specific time set at the Center.
Trouble Report (when detected)	Transmitted when the machine detects a malfunction (CXXXX).
Trouble Report (when reset)	Transmitted when a maintenance end report is transmitted after a malfunction (CXXXX) has been repaired and a copy made.
Warning Report (when detected)	Transmitted when the machine issues a warning (any of the threshold values is reached).
Warning Report (when reset)	Transmitted when a maintenance end report is transmitted after a warning has been corrected and a copy made.
Initial Transmission (Report)	Transmitted when an initial transmission is executed from the machine control panel.
Maintenance Start Report	Transmitted when a maintenance start report is transmitted from the machine control panel.
Maintenance End Report	Transmitted when a maintenance end report is transmitted from the machine control panel.
Administrator Report	Transmitted when an administrator report is transmitted from the machine control panel.

4-2. Types of Reports by Receiving Party (Center)

Center	Application	Report Type
1	Billing operation	Closing Report
3	Service	All reports but Closing Report

4-3. Transmitting/Receiving Data for Each Report

		Closing Report	Scheduled Report	Trouble Report (when detected)	Trouble Report (when reset)	Warning Report (when detected)	Warning Report (when reset)	Initial Transmission	Maintenance Start Report	Maintenance End Report	Administrator Report
Transmission Priority Order											
Transmitting Data	Total Counter	●	●	●	●	●	●	●	●	●	●
	Size Counter	●	●	●	●	●	●	●	●	●	●
	Malfunction Counter		●	●	●	●	●	●	●	●	●
	Misfeed Counter		●	●	●	●	●	●	●	●	●
	PM Counter		●	●	●	●	●	●	●	●	●
	ROM version		❍	●	●	●	●	●	●	●	●
	Malfunction data		❍	●	●	●	●	●	●	●	●
	Level history		●	●	●	●	●	●	●	●	●
	Misfeed data by date		●	●	●	●	●	●	●	●	●
	Copy track data										
	Telephone number							●			
Receiving Data	Next report time	●	●	●	●	●	●	●	●	●	●
	Misfeed frequency threshold value		●	●	●	●	●	●	●	●	●
	Telephone number (Center)		●	●	●	●	●	●	●	●	●
	Remote processing data		❍	❍	❍	❍	❍	❍	❍	❍	❍
	Copy track setting data										
	Report map		❍	❍	❍	❍	❍	❍	❍	❍	❍
	Text request	❍	❍	❍	❍	❍	❍	❍	❍	❍	❍

❍: Selectable by Center

NOTES:

1. *Types of receiving data vary as follows according to the Center to which a connection is made.*

Center	Receiving Data
1	Next report time, telephone number, text request
3	Next report time, misfeed frequency threshold value, telephone number, remote processing data, report map, text request

2. *Remote processing data refers to the type of data that can be manipulated from the Center, including malfunction reset, corona wire cleaning, and PM Counter reset.*

5. TECH. REP. MODE

"SMART" available from the Tech. Rep. mode of the machine is used to make the various settings for the Data Terminal.

SMART	Description
Billing Center	Use this function when a connection is made to the Center that controls copy charges. The copy count data for each machine is transmitted and received.
Mainte. Center	Use this function when a connection is made to the Center that controls maintenance of machines. Data, including malfunctions, warnings, and maintenance, is transmitted and received.
Date/Time	Set the date and time-of-day.
Common DT	Displays a screen that allows Dial Mode and Auto Receive to be set.
Dial Mode	Select the type of the telephone line used. • Pulse dialing: Select Pulse. • Tone dialing: Select Tone.
Auto Receive	Set the auto reception function. It is valid only when a leased line is being used.
ID Code	Enter the ID code uniquely assigned for each Tech. Rep. • The entry of the ID code automatically transmits a maintenance start report to the Center. • Use when connecting to the Maintenance Center.
DT Setting	Displays a screen that allows Password, DT-ID, and TEL. NO. to be set. • Password: Enter the ID number of the Center PC. • DT-ID: Enter the ID number of the Data Terminal. • TEL. NO.: Enter the telephone number of the modem connected to the Center PC. ***NOTE:*** *Enter the telephone number as detailed below if the Data Terminal is connected to an office system.* *1. If the time it takes the office system to access the outside line varies:* • *If it takes more than 2 sec., enter a pause code (-).* *(E.g.) It takes 4 sec. after dialing 0:* ***0--12345*** • *If the time varies, enter a wait code (W).* ***0W12345*** *2. If the signal method differs between the office system and the outside line:* • *Enter a pulse code (P) for pulse dialing and a tone code (T) for tone dialing before the corresponding set of numbers.* ***0P12345, 0T12345***

SMART	Description
Initial Transmission	Use this function to execute initial transmission from the Data Terminal to the Center PC. After the initial transmission, data is initially configured in the machine and the Center PC. Transmission status is checked with the following methods: • Displayed on the machine control panel. • ON, OFF, or blinking of LEDs on the Data Terminal ■ LED1:Power ON/OFF (OFF: OFF; blinking: ON) ■ LED2:Communication with the machine (OFF: not communicating; ON: communicating; blinking: communication failed) ■ LED3:Communication with the Center (OFF: not communicating; ON: communicating; blinking: communication failed) ■ LED4:Initial configuration (OFF: yet to be configured; ON: configured)
Mainte. End	Transmits a maintenance end report to the Center PC.
Billing RAM Clear	Initialize the DT Setting data of the Data Terminal (when a connection is made to the Billing Center).
Mainte. RAM Clear	Initialize the DT Setting data of the Data Terminal (when a connection is made to the Maintenance Center).

6. OPERATING PROCEDURES

6-1. Initial Setting

✻ Refer to Unpacking/Setting-Up Instructions.

6-2. Upon Calling on User (Connected to Maintenance Center)

1. Select SMART of the Tech. Rep. mode.
2. Enter the ID code (0000001 to 9999999).
3. Touch the ID code display. This highlights the ID code, which indicates that a maintenance start report has been transmitted.
4. Tech. Rep. starts the service job.
   (For a malfunction or an isolated malfunction, make one copy after it has been eliminated and the machine has been recovered.)
5. Tech. Rep. completes the service job.
6. Transmit a maintenance end report.
7. Verify that the sequence has been normally terminated.

6-3. Second Initial Setting

- The following steps must be performed when making initial settings a second time for a Data Terminal and a machine, for which initial settings have previously been made.
- The following instances require a second sequence of initial settings.

★ Center PC is replaced. ★ DT-105 is replaced. ★ Telephone line is changed.

(1) Initializing the DT-105 (★ only when the DT-105 has been replaced)

1. Turn OFF the power.
2. Remove the cover.
3. Flip key 3 of the DIP switch to ON.
4. Turn ON the power.
5. Turn OFF the power.
6. Flip key 3 of the DIP switch to OFF. (DT-105 is initialized at all times if the key is kept ON.)
7. Reinstall the cover.

(2) Initializing the machine (SMART)

1. Select SMART from the Tech. Rep. mode.
2. Enter the ID code (0000001 to 9999999).
3. Perform RAM Clear procedures.
4. Make DT settings.
5. Execute an initial transmission.
6. Verify that the sequence has been normally terminated.

7. TROUBLESHOOTING DURING DATA TRANSMISSION

- The data transmission status can be monitored with the display given on the machine control panel and ON, OFF, or blinking LEDs on the Data Terminal.
- The table below shows the appropriate actions to be taken depending on different fault indications given of the data transmission status.

<table>
<tr><th colspan="2">Normal</th><th colspan="2">Faulty</th><th rowspan="2">Action</th></tr>
<tr><th>Control Panel</th><th>LED</th><th>Control Panel</th><th>LED</th></tr>
<tr><td>During transmission</td><td>LED1: Blinking;
LED2: ON</td><td>DT Connection failed.</td><td>LED1: Blinking;
LED2: Blinking</td><td>Check connection between Data Terminal and machine, or change Data Terminal.</td></tr>
<tr><td rowspan="5">↓</td><td rowspan="5">LED1: Blinking;
LED3: ON</td><td>DT modem error.</td><td rowspan="5">LED1: Blinking;
LED3: Blinking</td><td></td></tr>
<tr><td>Line is busy.</td><td rowspan="2">Check to see if the telephone or fax using the same line is being used.</td></tr>
<tr><td>The other line is busy.</td></tr>
<tr><td>Not answering.</td><td>Check the modular cord for proper connection.</td></tr>
<tr><td>Max. trial number reached.</td><td rowspan="2">• Check DT Setting again and retransmit.
• Check to see if the Center is operational.
• Check to see if the telephone company is operational.</td></tr>
<tr><td>Normally terminated</td><td>LED1: Blinking;
LED4: ON</td><td>Connection failed.</td><td>LED1: Blinking;
LED4: OFF</td></tr>
</table>

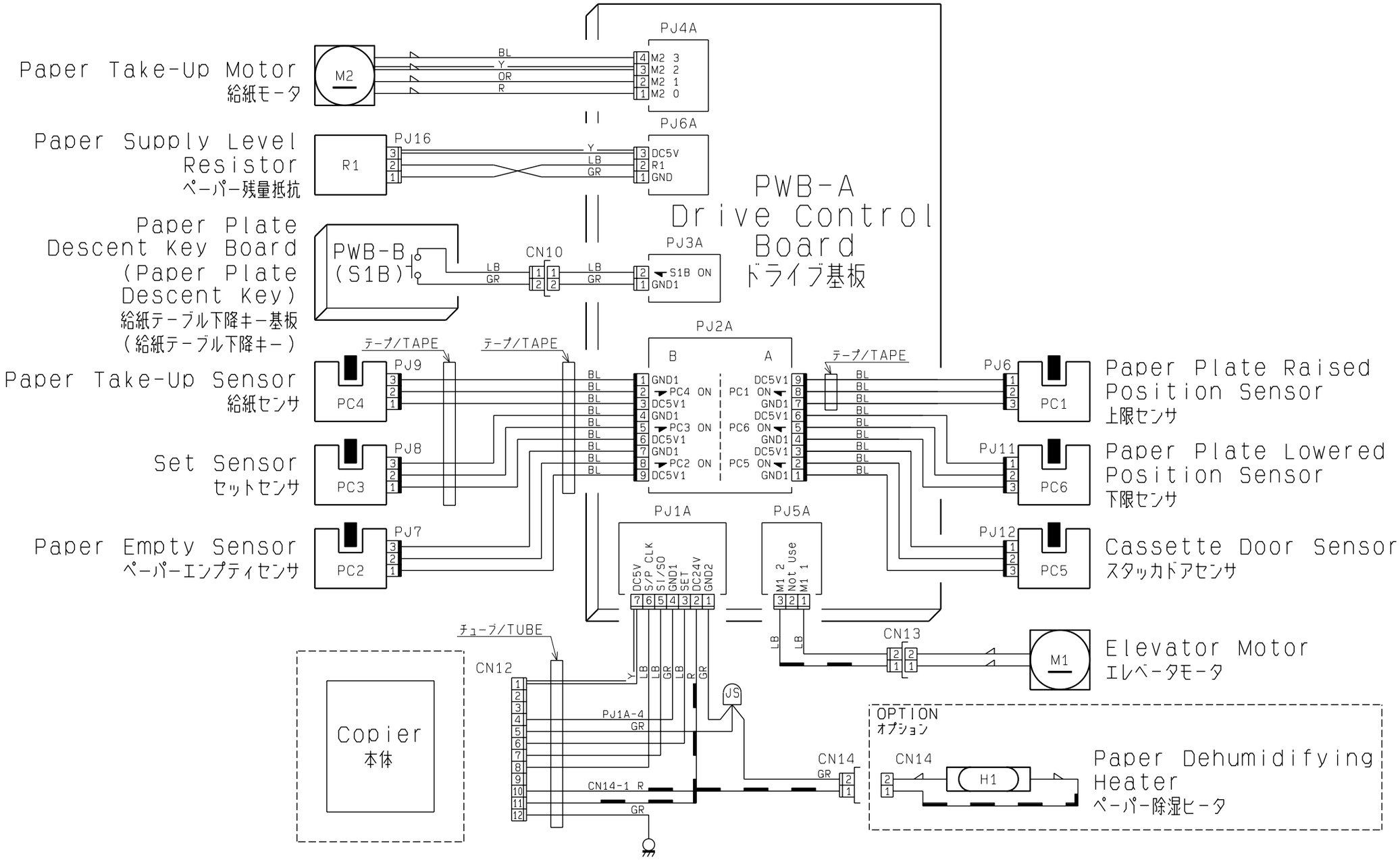

DWG. NO.	4642-C001-0A
TITLE	WIRING DIAGRAM
MODEL	C-306/ C-306L(####. Except Japan)
VOLTAGE	From the copier
EFFECTIVE MACHINE NO.	XX0201 AND ONWARD
DATE ISSUED	Aug. 2000

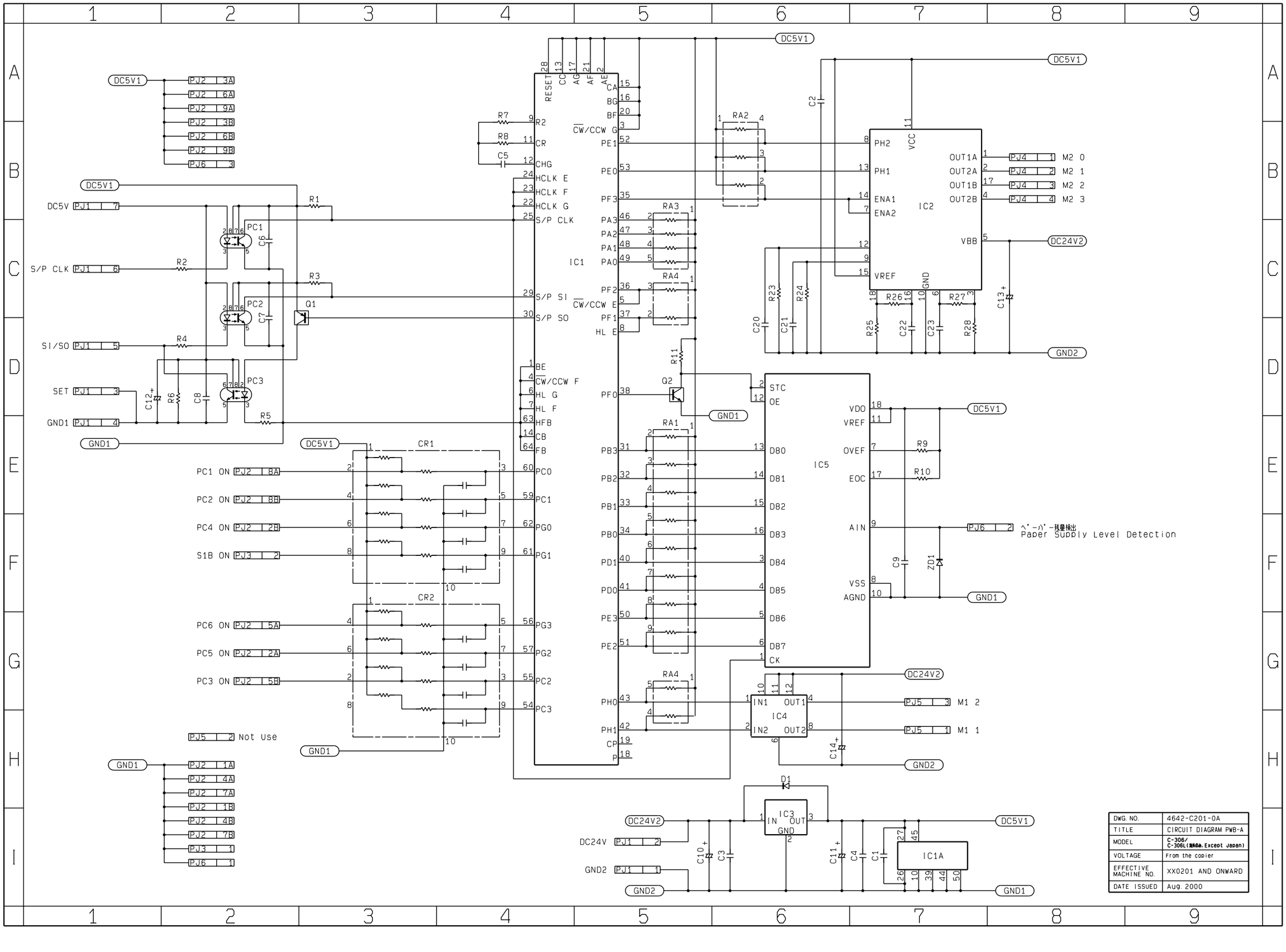
DC5V1
PJ2 3A
PJ2 6A
PJ2 9A
PJ2 3B
PJ2 6B
PJ2 9B
PJ6 3
DC5V
PJ1 7
S/P CLK
PJ1 6
SI/SO
PJ1 5
SET
PJ1 3
GND1
PJ1 4
R1
R2
R3
R4
R5
R6
R7
R8
R9
R10
R11
C1
C2
C3
C4
C5
C6
C7
C8
C9
C10
C11
C12
C13
C14
C20
C21
C22
C23
C24
C25
PC1
PC2
PC3
Q1
Q2
ZD1
D1
IC1
IC2
IC3
IC4
IC5
IC1A
RESET
CW/CCW G
HCLK E
HCLK F
HCLK G
S/P CLK
S/P SI
CW/CCW E
S/P SO
HL E
CW/CCW F
HL G
HL F
HFB
CB
FB
CHG
CR
CA
BG
BF
AE
AF
AG
CC
PE1
PE0
PF3
PA3
PA2
PA1
PA0
PF2
PF1
PF0
PB3
PB2
PB1
PB0
PD1
PD0
PE3
PE2
PH0
PH1
CP
P
CK
D80
D81
D82
D83
D84
D85
D86
D87
PC0
PC1
PG0
PG1
PG3
PG2
PC2
PC3
RA1
RA2
RA3
RA4
CR1
CR2
PC1 ON PJ2 8A
PC2 ON PJ2 8B
PC4 ON PJ2 2B
S1B ON PJ3 2
PC6 ON PJ2 5A
PC5 ON PJ2 2A
PC3 ON PJ2 5B
PJ5 2 Not Use
PJ2 1A
PJ2 4A
PJ2 7A
PJ2 1B
PJ2 4B
PJ2 7B
PJ3 1
PJ6 1
PH2
PH1
ENA1
ENA2
VREF
VCC
VBB
GND
OUT1A
OUT2A
OUT1B
OUT2B
PJ4 1 M2 0
PJ4 2 M2 1
PJ4 3 M2 2
PJ4 4 M2 3
DC24V2
GND2
STC
OE
VDO
OVEF
EOC
AIN
VSS
AGND
PJ6 2
ﾍﾟｰﾊﾟｰ残量検出
Paper Supply Level Detection
IN1
IN2
OUT1
OUT2
PJ5 3 M1 2
PJ5 1 M1 1
DC24V
GND
IC1A
DWG. NO. 4642-C201-0A
TITLE CIRCUIT DIAGRAM PWB-A
MODEL C-306/ C-306L(海外Except Japan)
VOLTAGE From the copier
EFFECTIVE MACHINE NO. XX0201 AND ONWARD
DATE ISSUED Aug. 2000

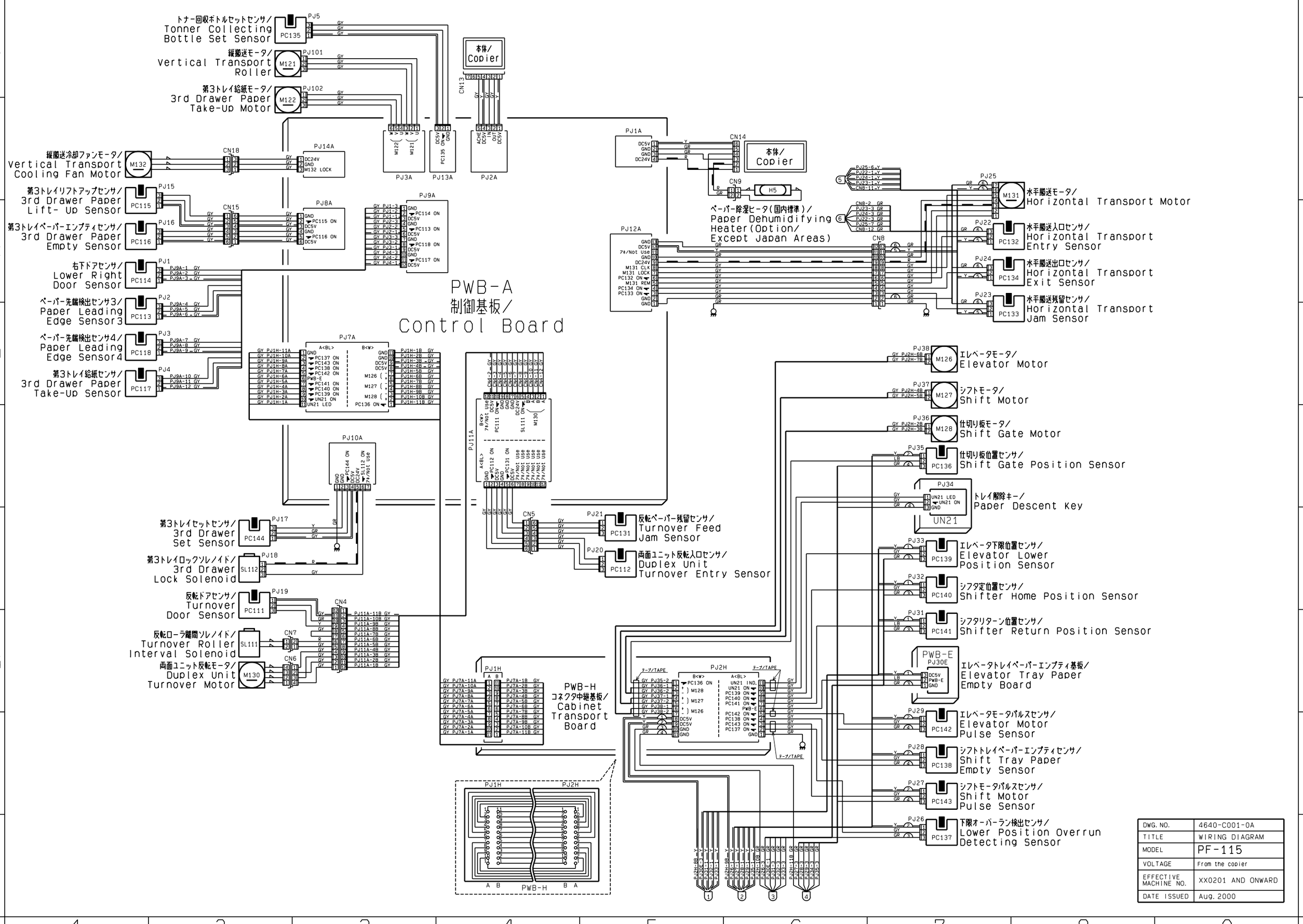

DWG. NO.	4640-C001-0A
TITLE	WIRING DIAGRAM
MODEL	PF-115
VOLTAGE	From the copier
EFFECTIVE MACHINE NO.	XX0201 AND ONWARD
DATE ISSUED	Aug. 2000

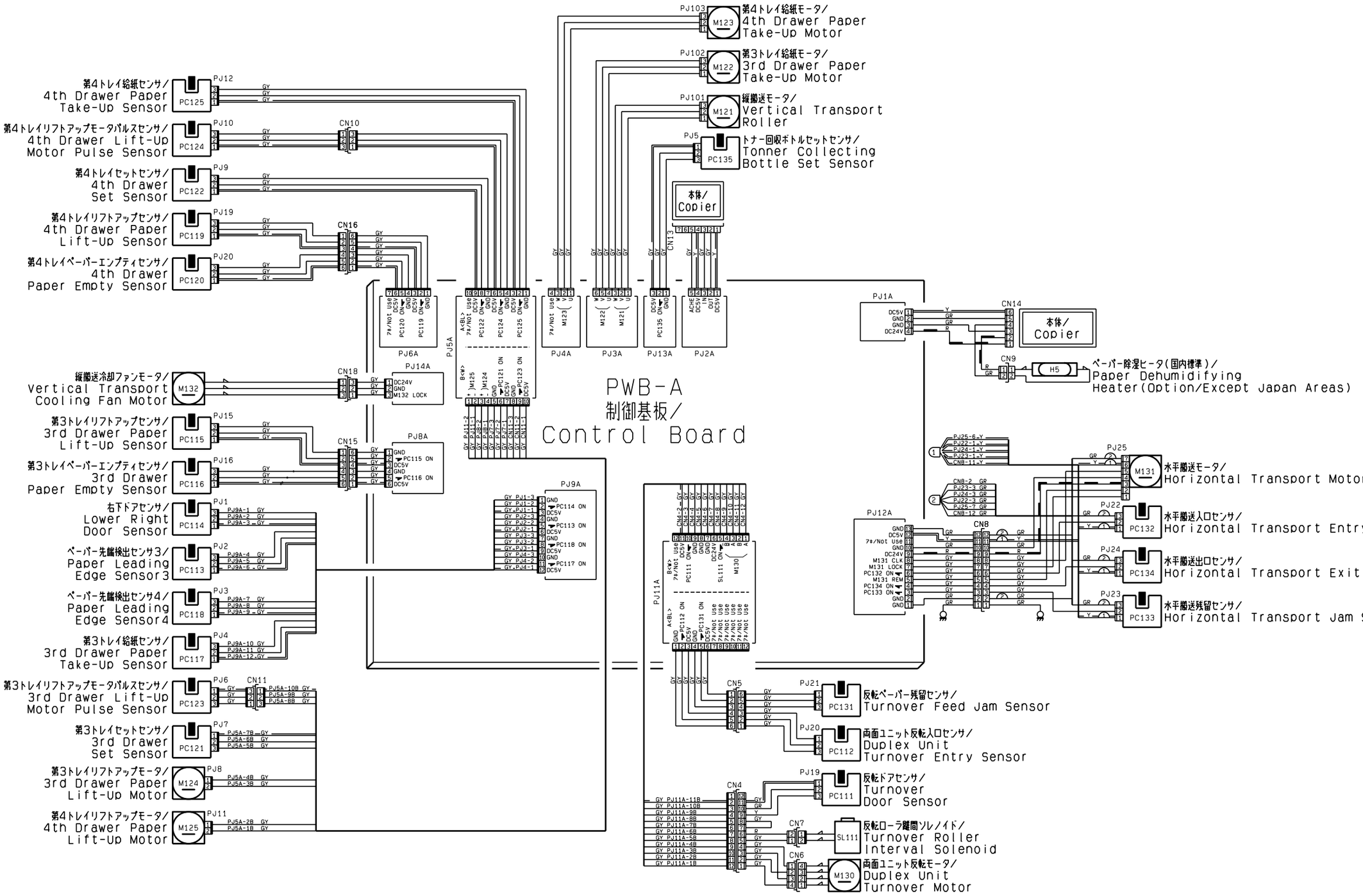

DWG. NO.	4640-C002-0A
TITLE	WIRING DIAGRAM
MODEL	PF-208
VOLTAGE	From the copier
EFFECTIVE MACHINE NO.	XX0201 AND ONWARD
DATE ISSUED	Aug. 2000

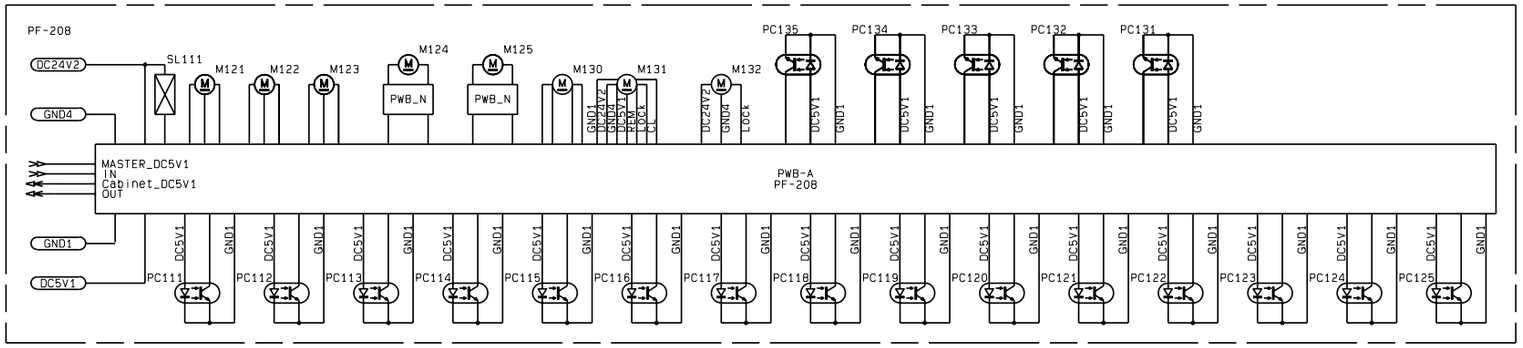

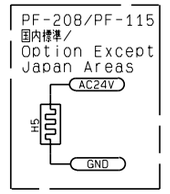

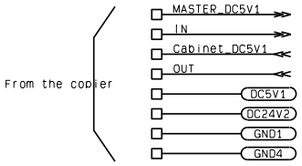

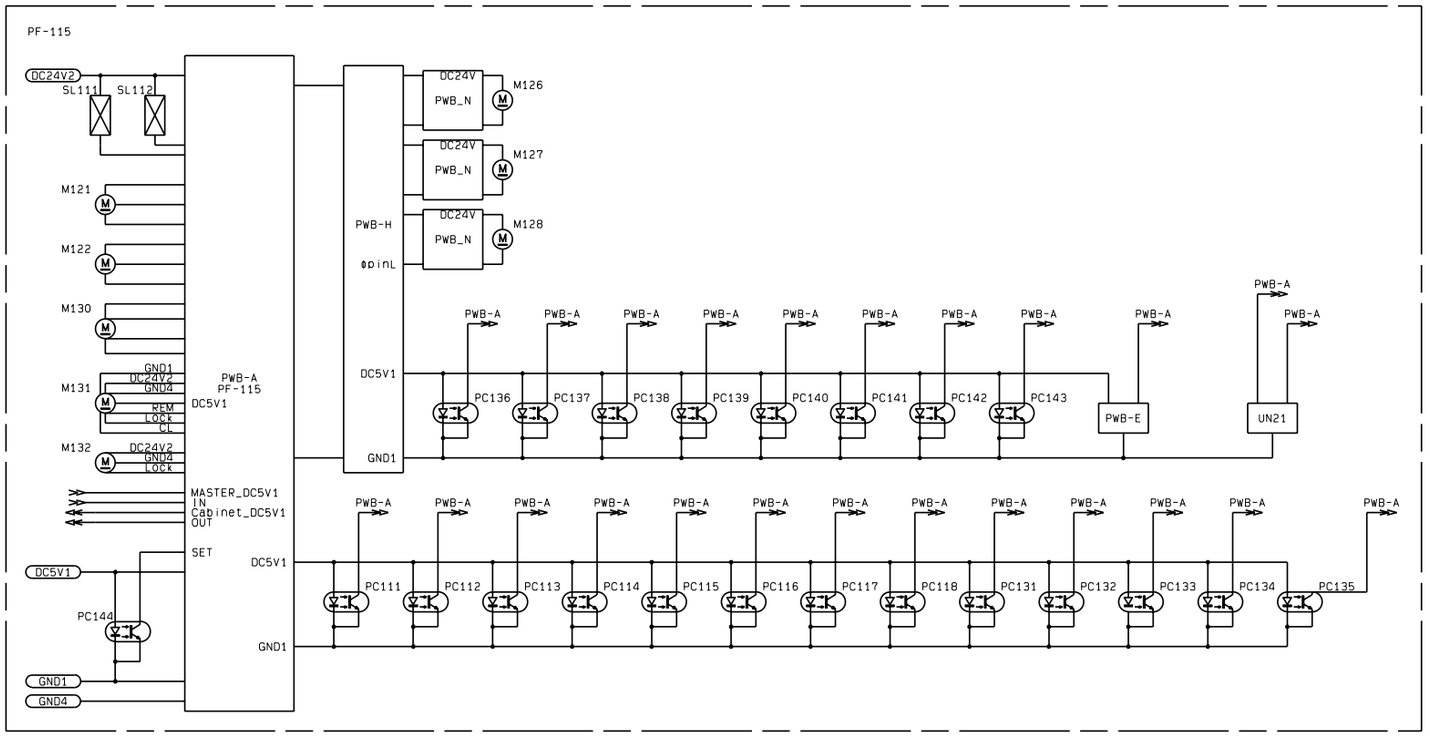

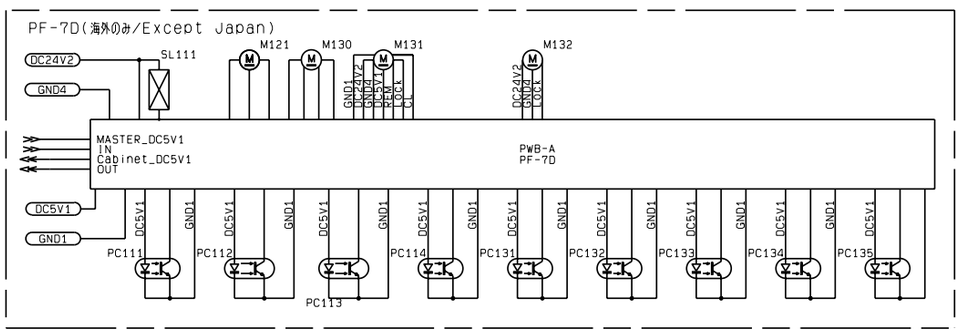

H5	ペーパー除湿ヒータ	Paper Dehumidifying Heater(OP)
M121	縦搬送モータ	Vertical Transport Roller
M122	第3トレイ給紙モータ	3rd Drawer Paper Take-Up Motor
M123	第4トレイ給紙モータ	4th Drawer Paper Take-Up Motor
M124	第3トレイリフトアップモータ	3rd Drawer Paper Lift-Up Motor
M125	第4トレイリフトアップモータ	4th Drawer Paper Lift-Up Motor
M126	エレベータモータ	Elevator Motor
M127	シフトモータ	Shift Tray Motor
M128	仕切り板モータ	Shift Gate Motor
M130	両面ユニット反転入口モータ	Duplex Unit Turnover Motor
M131	水平搬送モータ	Horizontal Transport Motor
PC111	反転ドアセンサ	Turnover Door Sensor
PC112	両面ユニット反転入口センサ	Duplex Unit Turnover Entry Sensor
PC113	ペーパー先端検出センサ3	Paper Leading Edge Sensor3
PC114	右下ドアセンサ	Lower Right Door Sensor
PC115	第3トレイリフトアップセンサ	3rd Drawer Paper Lift-Up Sensor
PC116	第3トレイペーパーエンプティセンサ	3rd Drawer Paper Empty Sensor
PC117	第3トレイ給紙センサ	3rd Drawer Paper Take-Up Sensor
PC118	ペーパー先端検出センサ4	Paper Leading Edge Sensor4
PC119	第4トレイリフトアップセンサ	4th Drawer Paper Lift-Up Sensor
PC120	第4トレイペーパーエンプティセンサ	4th Drawer Paper Empty Sensor
PC121	第3トレイセットセンサ	3rd Drawer Set Sensor
PC122	第4トレイセットセンサ	4th Drawer Set Sensor
PC123	第3トレイリフトアップモータパルスセンサ	3rd Drawer Lift-Up Motor Pulse Sensor
PC124	第4トレイリフトアップモータパルスセンサ	4th Drawer Lift-Up Motor Pulse Sensor
PC125	第4トレイ給紙センサ	4th Drawer Paper Take-Up Sensor
PC131	反転ペーパー残留センサ	Turnover Feed Jam Sensor
PC132	水平搬送入口センサ	Horizontal Transport Entry Sensor
PC133	水平搬送残留センサ	Horizontal Transport Jam Senser
PC134	水平搬送出口センサ	Horizontal Transport Exit Sensor
PC135	トナー回収ボトルセットセンサ	Toner Collecting Bottle Set Sensor
PC136	仕切り板位置センサ	Shift Gate Position Sensor
PC137	下限オーバーラン検出センサ	Lower Position Overrun Detecting Sensor
PC138	シフトトレイペーパーエンプティセンサ	Shift Tray Paper Empty Sensor
PC139	エレベータ下限位置センサ	Elevator Lower Position Sensor
PC140	シフタ定位置センサ	Shifter Home Position Sensor
PC141	シフタリターン位置センサ	Shifter Return Position Sensor
PC142	エレベータモータパルスセンサ	Elevator Motor Pulse Sensor
PC143	シフトモータパルスセンサ	Shift Motor Pulse Sensor
PC144	第3トレイセットセンサ	3rd Drawer Set Sensor
PWB-A	制御基板	Master Board
PWB-E	エレベータトレイペーパーエンプティ基板	Elevator Tray Paper Empty Board
PWB-H	コネクタ中継基板	Cabinet Transport Board
SL111	反転ローラ離間ソレノイド	Turnover Roller Interval Solenoid
SL112	第3トレイロックソレノイド	3rd Drawer Lock Solenoid
UN21	トレイ解除キー	Paper Descent Key

DWG. NO.	4640-C101-0A
TITLE	CIRCUIT DIAGRAM
MODEL	PF-208/PF-115/PF-7D
VOLTAGE	AC100/115/120/127/ 200/220/240V
EFFECTIVE MACHINE NO.	XX0101 AND ONWARD
DATE ISSUED	Aug. 2000

DWG. NO.	4640-C201-0A
TITLE	CIRCUIT DIAGRAM PWB-A
MODEL	PF-115
VOLTAGE	From the copier
EFFECTIVE MACHINE NO.	XX0201 AND ONWARD
DATE ISSUED	Aug. 2000

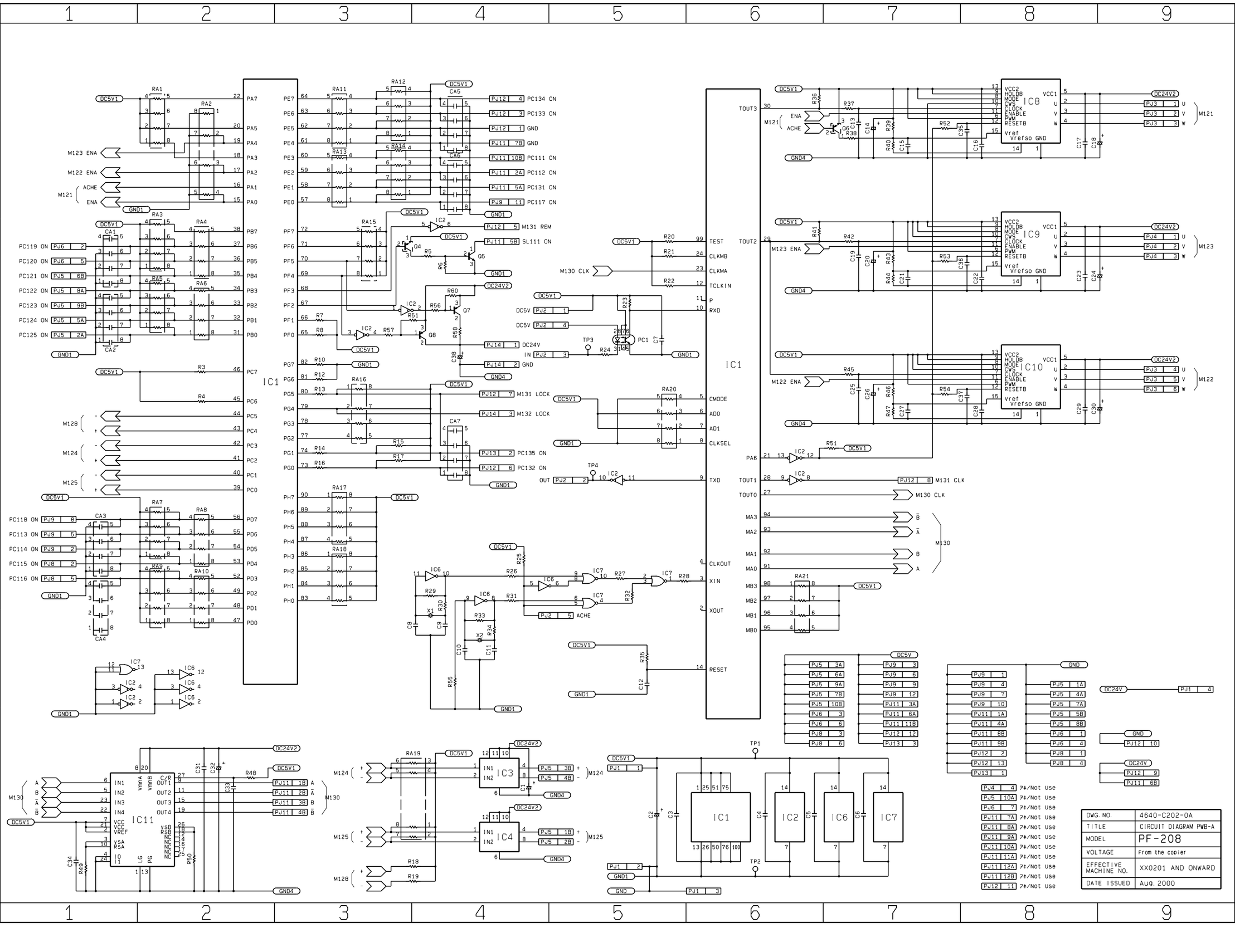

DWG. NO.	4640-C202-0A
TITLE	CIRCUIT DIAGRAM PWB-A
MODEL	PF-208
VOLTAGE	From the copier
EFFECTIVE MACHINE NO.	XX0201 AND ONWARD
DATE ISSUED	Aug. 2000

1-1.One-Sided Mode (When Two A4) Documents are Loaded Crosswise

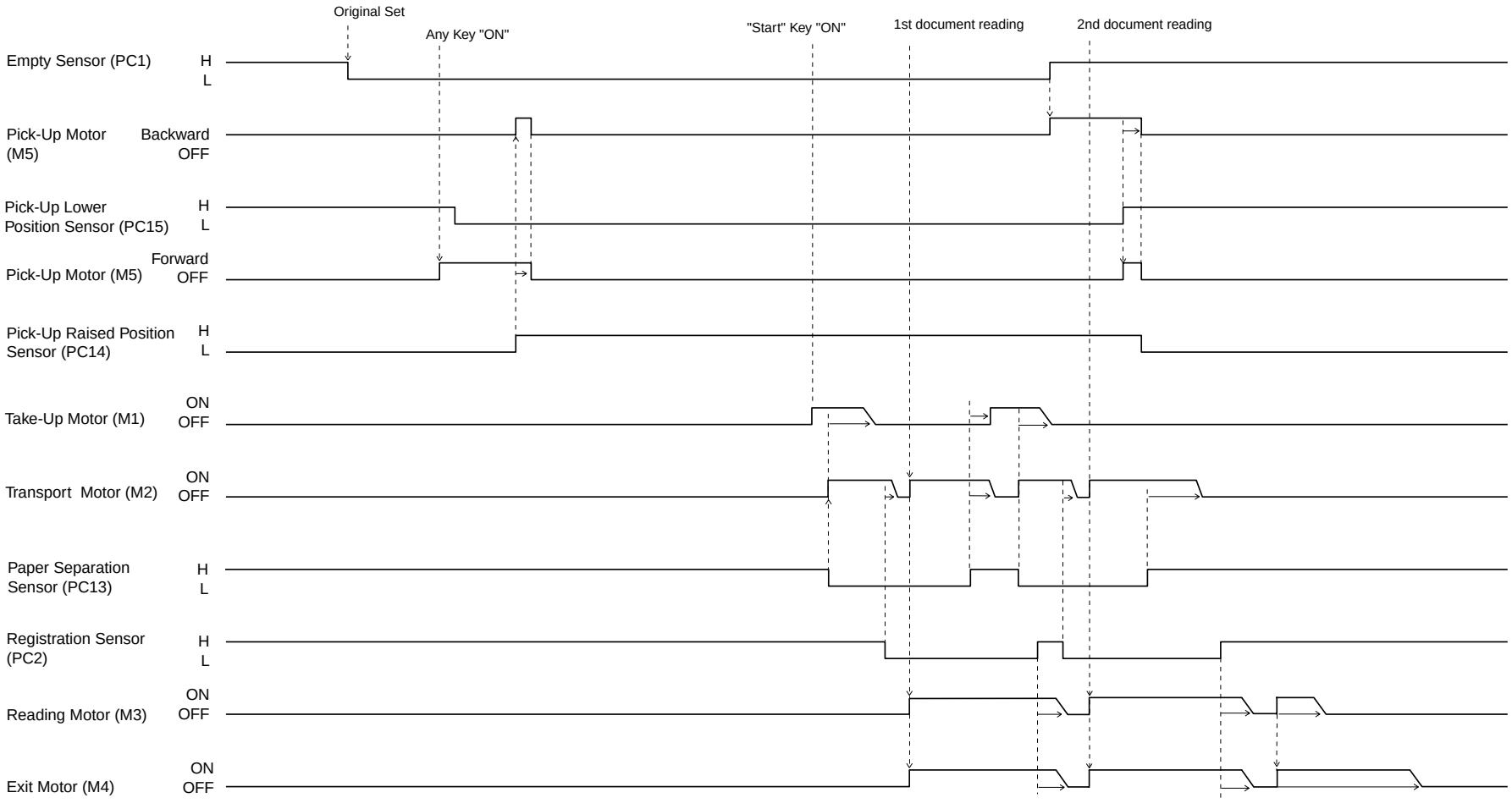

1-2.Two-Sided Mode (Duplex Mode) (When Two A4) Documents are Loaded Crosswise

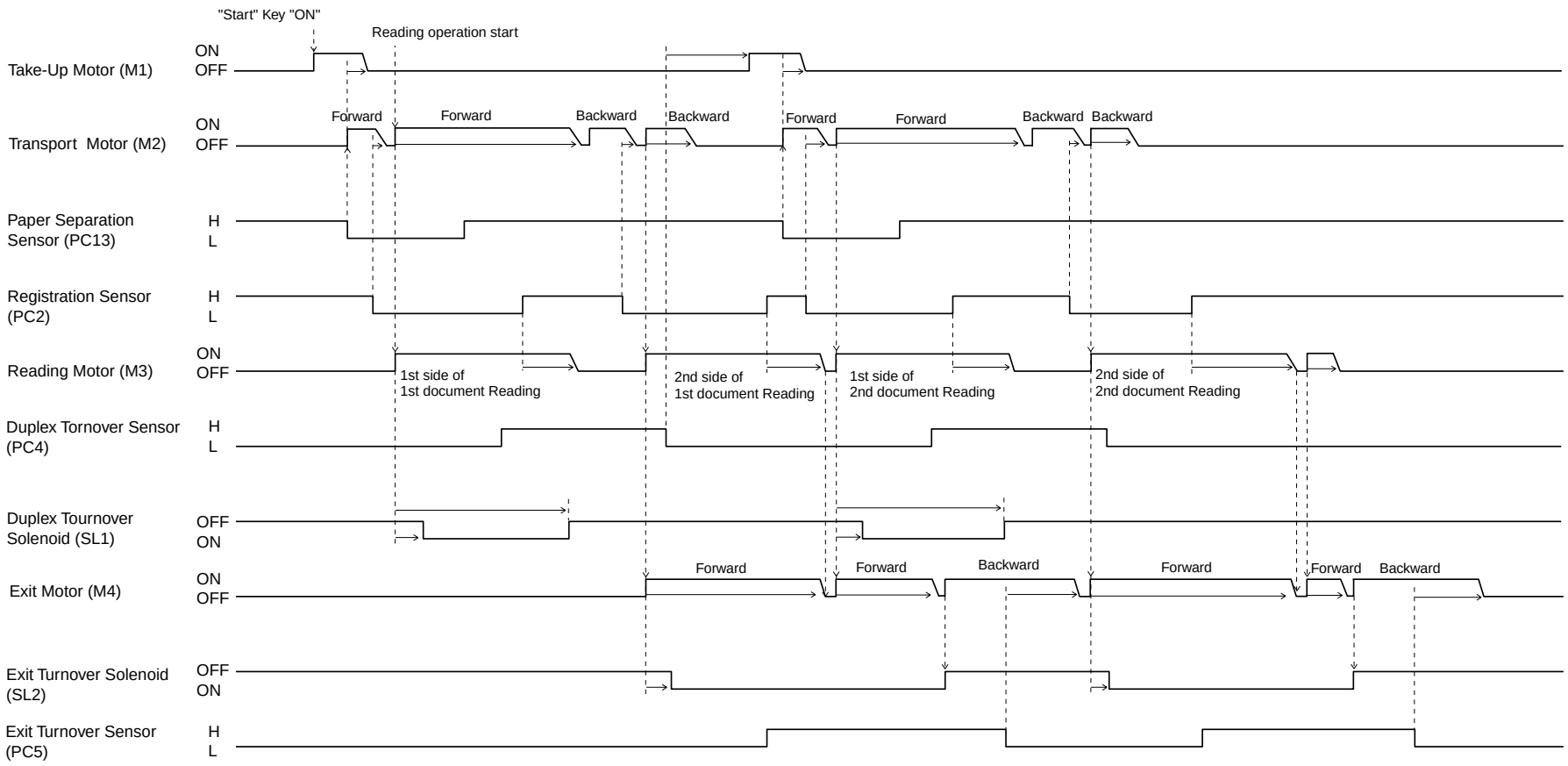

1-3.Mixed-Side (AMS) Mode (When Two A4) Documents are Loaded Crosswise

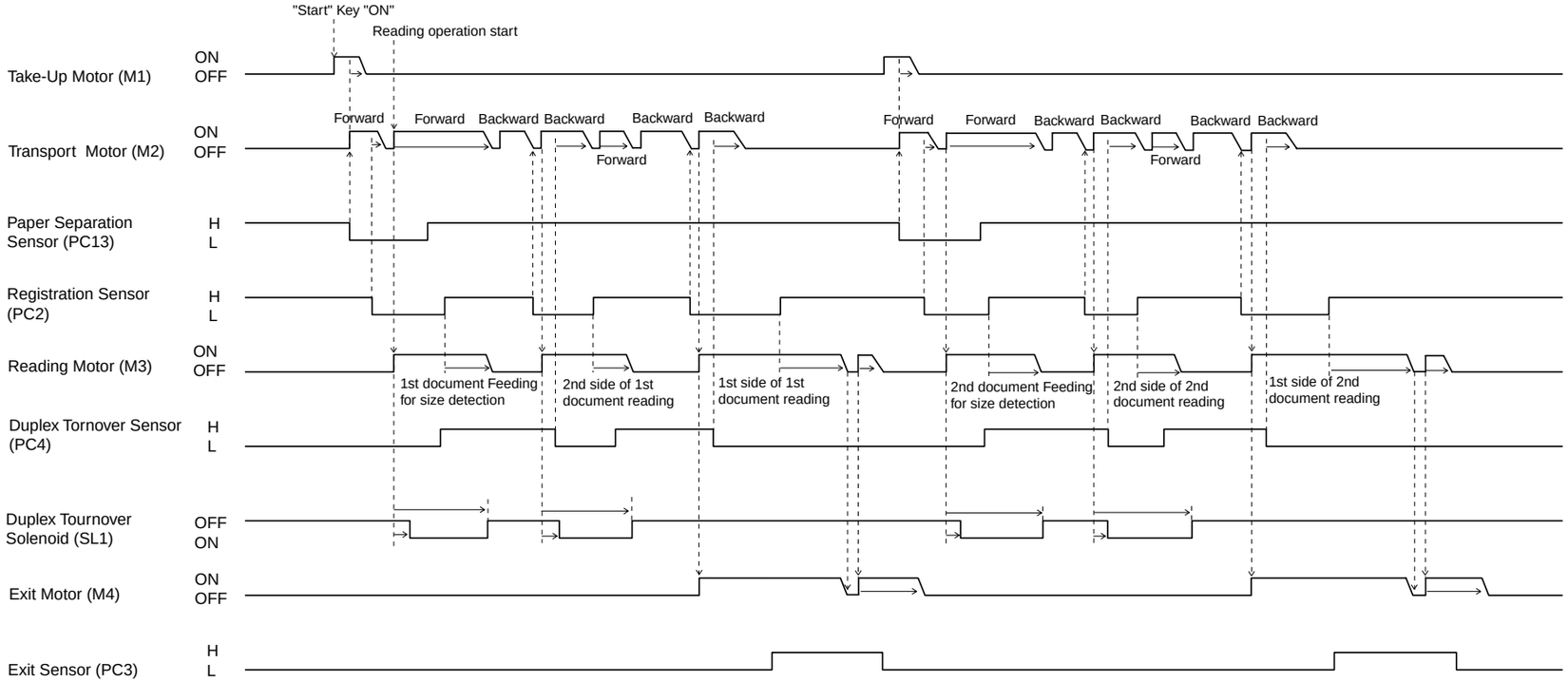

1-4.Single-Feed Mode Document is Loaded Crosswise

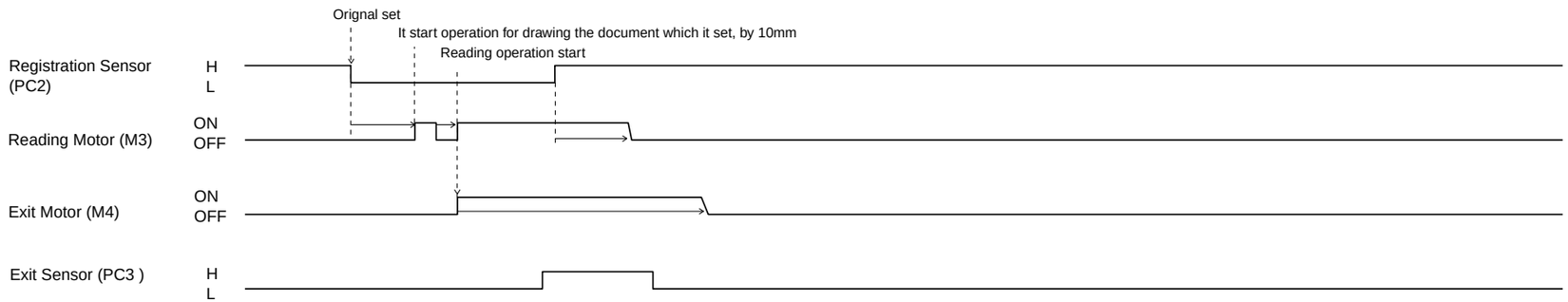

PWB-A
制御基板/
Main Control Board

幅サイズセンサ2/ Paper Width Sensor2 — PC9 — PJ7
幅サイズセンサ3/ Paper Width Sensor3 — PC10 — PJ8
幅サイズセンサ4/ Paper Width Sensor4 — PC11 — PJ9
幅サイズセンサ5/ Paper Width Sensor5 — PC12 — PJ10
ピックアップ上限センサ/ Pick-Up Raised Position Sensor — PC14 — PJ12
サバキセンサ/ Paper Separation Sensor — PC13 — PJ11
幅サイズセンサ1/ Paper Width Sensor1 — PC8 — PJ6
給紙部開閉センサ/ Paper Take-Up Open/Close Sensor — PC17 — PJ15
手差し開閉センサ/ Manual Feed Open/Close Sensor — PC16 — PJ14
レジストセンサ/ Registration Sensor — PC2 — PJ2 — CN2
エンプティセンサ/ Empty Sensor — PC1 — PJ1
両面反転センサ/ Duplex Turnover Sensor — PC4 — PJ4
ピックアップ下限センサ/ Pick-Up Lower Position Sensor — PC15 — PJ13
長さサイズセンサ1/ Paper Length Sensor1 — PC6 — PJ17
長さサイズセンサ2/ Paper Length Sensor2 — PC7 — PJ18

PJ5A: GND, PC14 ON, DC5V, GND, PC13 ON, DC5V, GND, PC8 ON, DC5V, 予備/Not Use
PJ6A: GND, PC9 ON, DC5V, GND, PC10 ON, DC5V, GND, PC11 ON, DC5V, GND, PC12 ON, DC5V
PJ4A: GND, PC17 ON, DC5V, GND, PC16 ON, DC5V, GND, PC2 ON, DC5V, 予備/Not Use, 予備/Not Use
PJ10A: GND, PC1 ON, DC5V, GND, PC4 ON, DC5V, GND, PC15 ON, DC5V, GND, PC6 ON, DC5V, GND, PC7 ON, DC5V

CN6: PJ10A-1 GY … PJ10A-15 GY

排紙反転センサ/ Exit Turnover Sensor — PC5 — PJ5
排紙センサ/ Exit Sensor — PC3 — PJ3
反転部開閉センサ/ Turnover Open/Close Sensor — PC18 — PJ16

PJ7A: 9 8 7 6 5 4 3 2 1 — DC5V ON PC18 / GND / DC5V ON PC3 / GND / DC5V ON PC5 / GND

GR
GR
GR

チューブ/TUBE

PJ3A: M6 LOCK, PC5 ON, DC5V, M4 ENABLE, M3 ENABLE, M2 ENABLE, PC4 ON, DC5V
PJ2A: S/P CLK, M4 PLS, M3 PLS, M2 PLS, PC2 ON, DATA OUT, DATA IN, GND, SET
PJ1A: DC5V, GND, DC24V, SL2 ON
PJ12A: DC24V, GND, M6 LOCK
PJ9A: DC24V, SL1 ON, DC24V, SL2 ON
PJ8A: U V W U V W U V W U V W
PJ11A: 1 2) M5

CN34 / CN35 / CN36

本体/Copier

CN7 — M5 — ピックアップモータ/ Pick-Up Motor
PJ23 — M4 — 排紙モータ/ Exit Motor
PJ22 — M2 — 搬送モータ/ Transport Motor
PJ21 — M1 — 給紙モータ/ Take-Up 4otor
PJ20 — M3 — 読み取りモータ/ Reading Motor

ファンモータ/ Fan Motor — M6 — CN8
両面反転ソレノイド/ Duplex Turnover Solenoid — SL1 — CN4
CN5 — SL2 — 排紙反転ソレノイド/ Exit Turnover Solenoid

DWG. NO.	4641-C001-0A
TITLE	WIRING DIAGRAM
MODEL	EDH-3
VOLTAGE	From the copier
EFFECTIVE MACHINE NO.	XX0201 AND ONWARD
DATE ISSUED	Aug. 2000

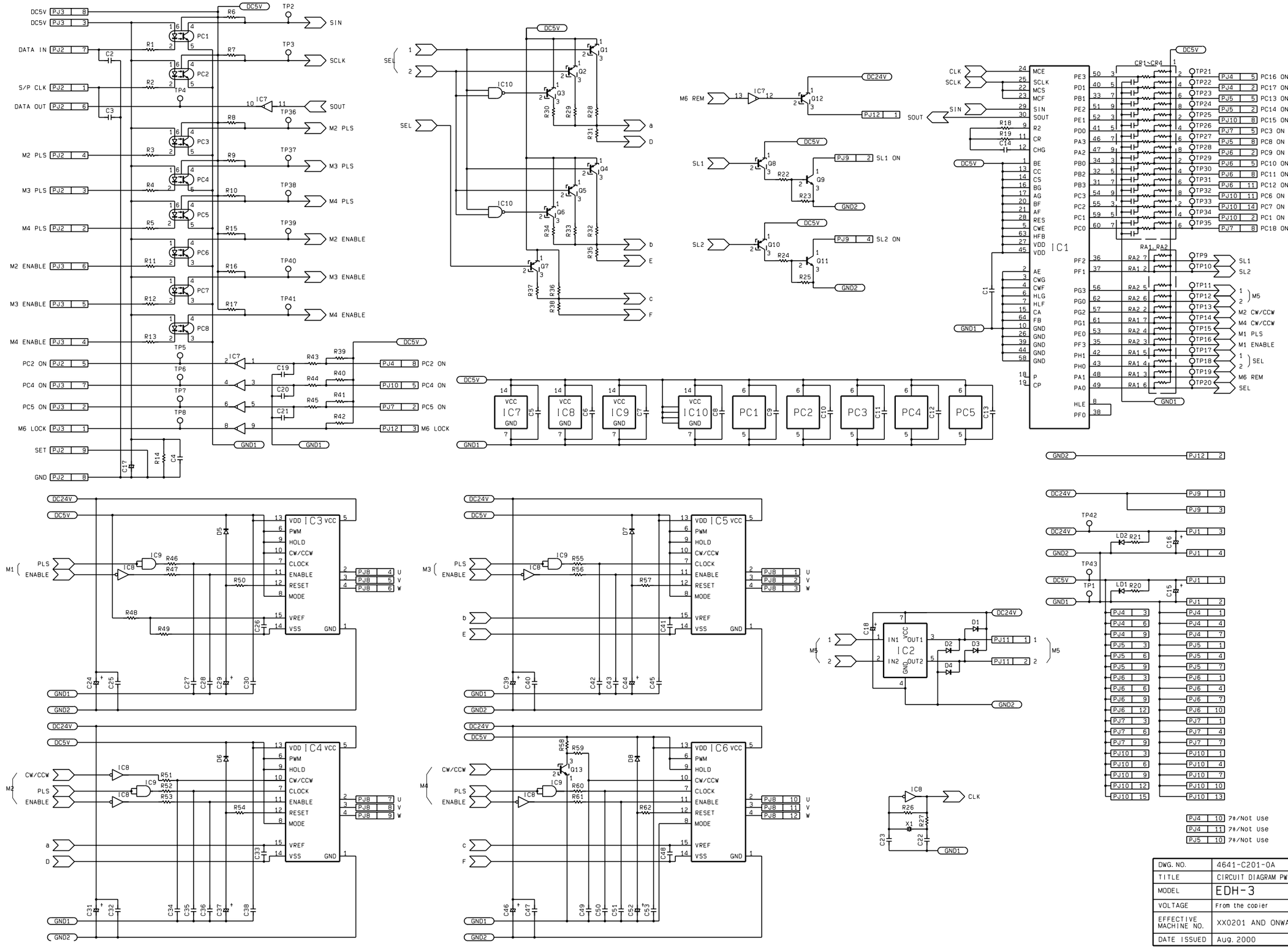

DWG. NO.	4641-C201-0A
TITLE	CIRCUIT DIAGRAM PWB-A
MODEL	EDH-3
VOLTAGE	From the copier
EFFECTIVE MACHINE NO.	XX0201 AND ONWARD
DATE ISSUED	Aug. 2000

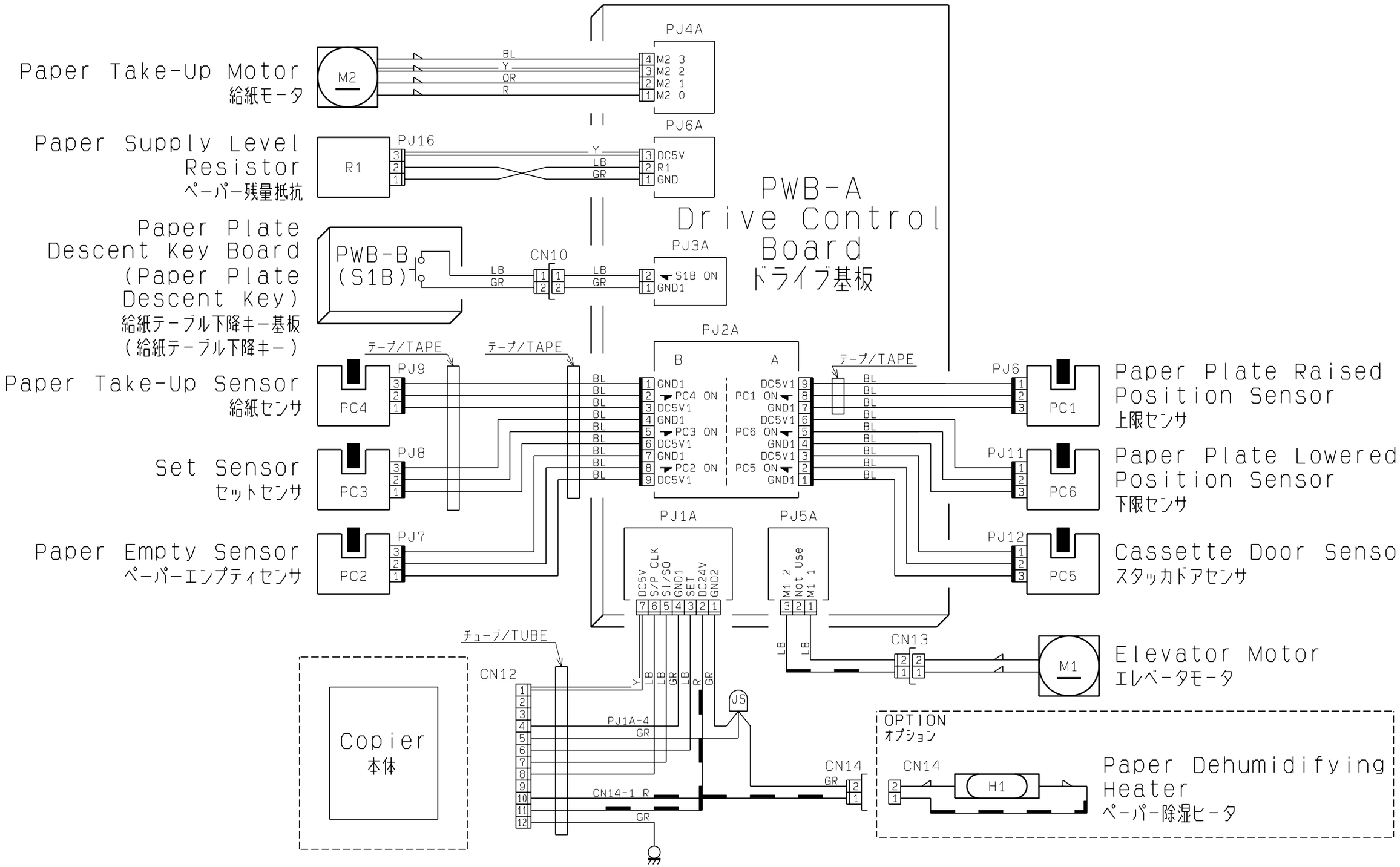

DWG. NO.	4642-C001-0A
TITLE	WIRING DIAGRAM
MODEL	C-306/ C-306L(英和a. Except Japan)
VOLTAGE	From the copier
EFFECTIVE MACHINE NO.	XX0201 AND ONWARD
DATE ISSUED	Aug. 2000

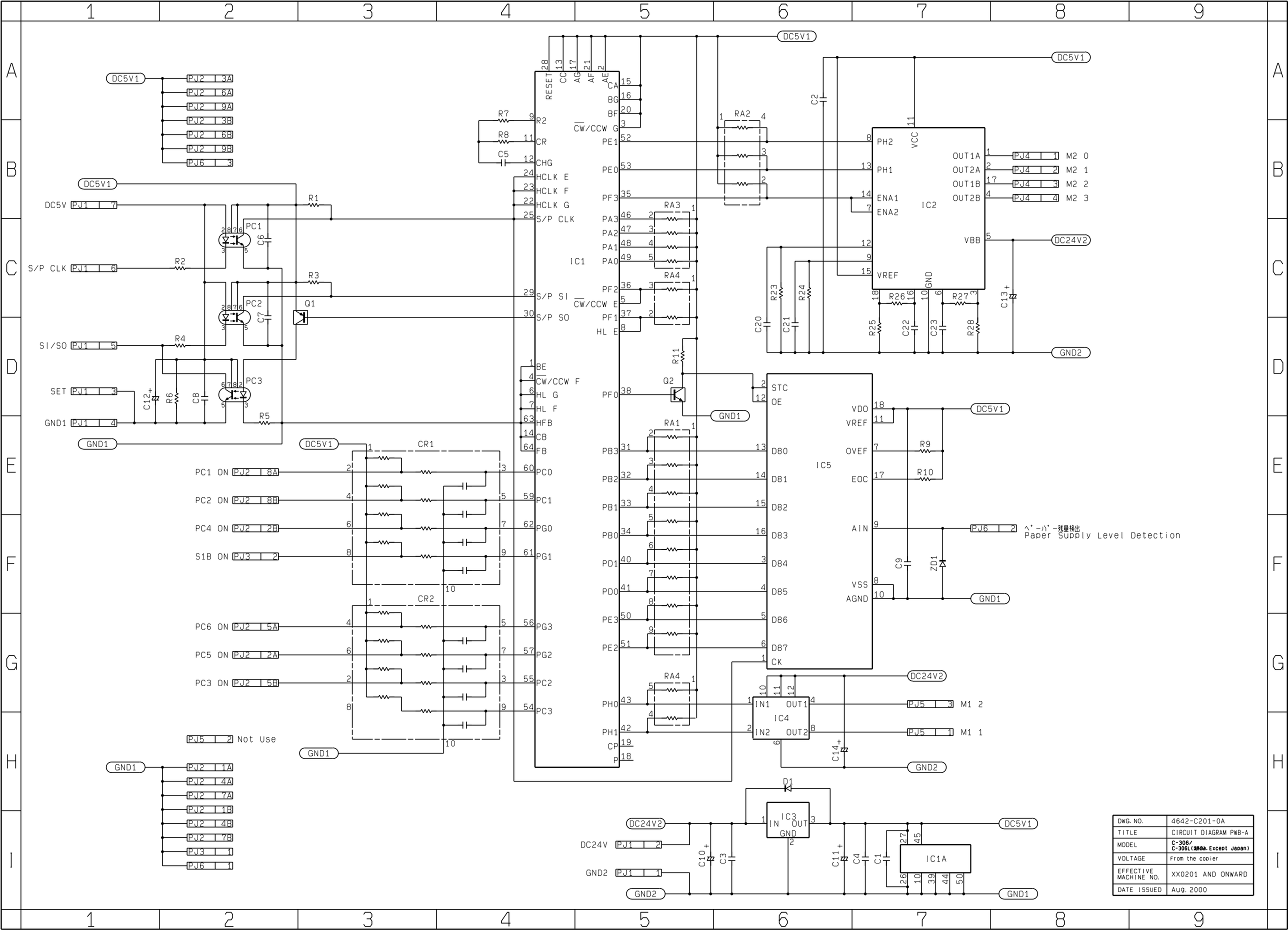

DWG. NO.	4642-C201-0A
TITLE	CIRCUIT DIAGRAM PWB-A
MODEL	C-306/ C-306L(※※a. Except Japan)
VOLTAGE	From the copier
EFFECTIVE MACHINE NO.	XX0201 AND ONWARD
DATE ISSUED	Aug. 2000

PWB-A
制御基板/
Control Board

DWG. NO.	4643-C001-0A
TITLE	WIRING DIAGRAM
MODEL	FN-105/FN-106
VOLTAGE	From the copier
EFFECTIVE MACHINE NO.	XX0201 AND ONWARD
DATE ISSUED	Aug. 2000

3. Sort Staple Mode(rear corner stapling, A4L, feeding two copy sets out, made from two originals)

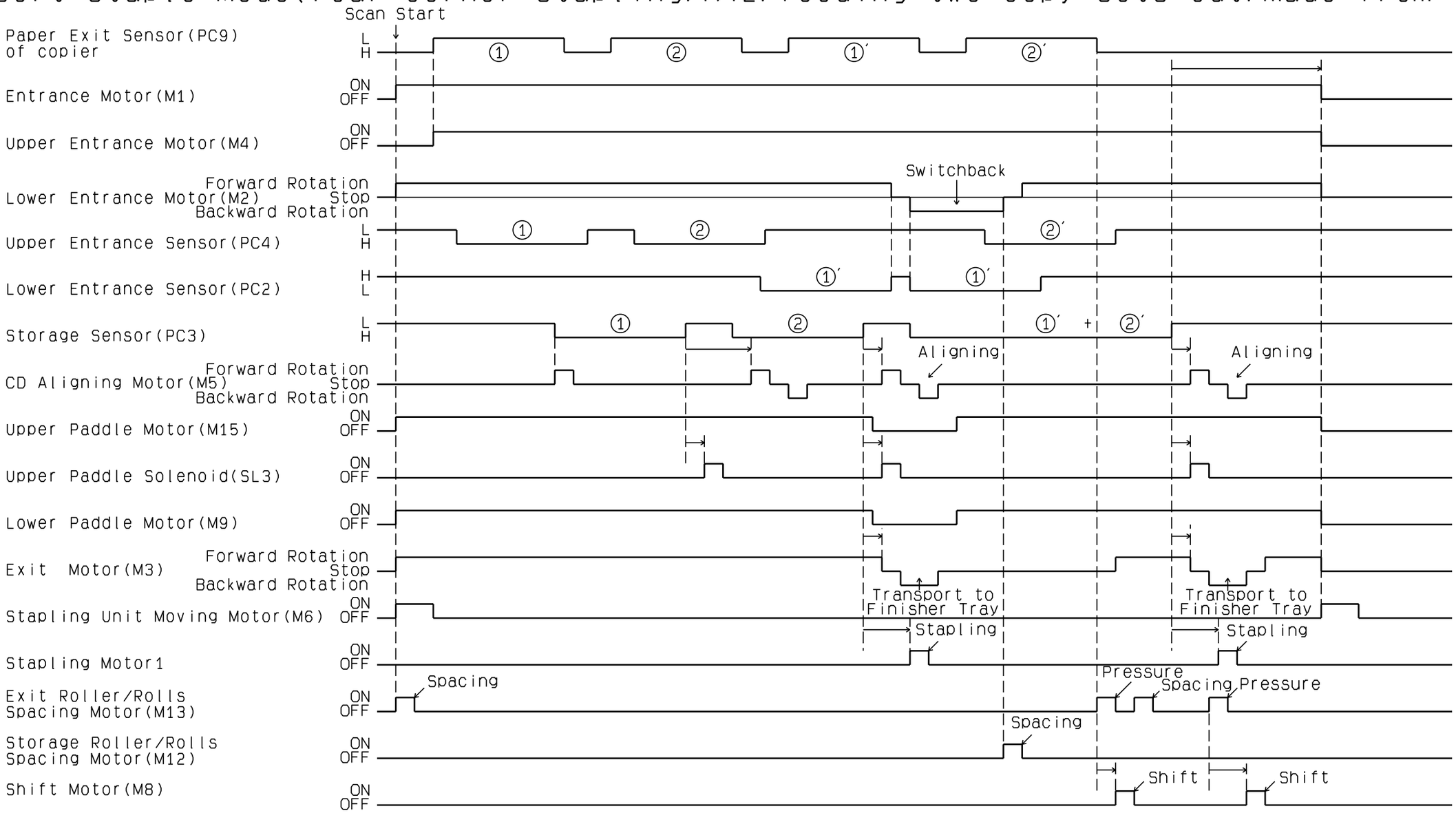

4. Non-Sort/Hole Punch Mode(feeding one copy out):FN-105

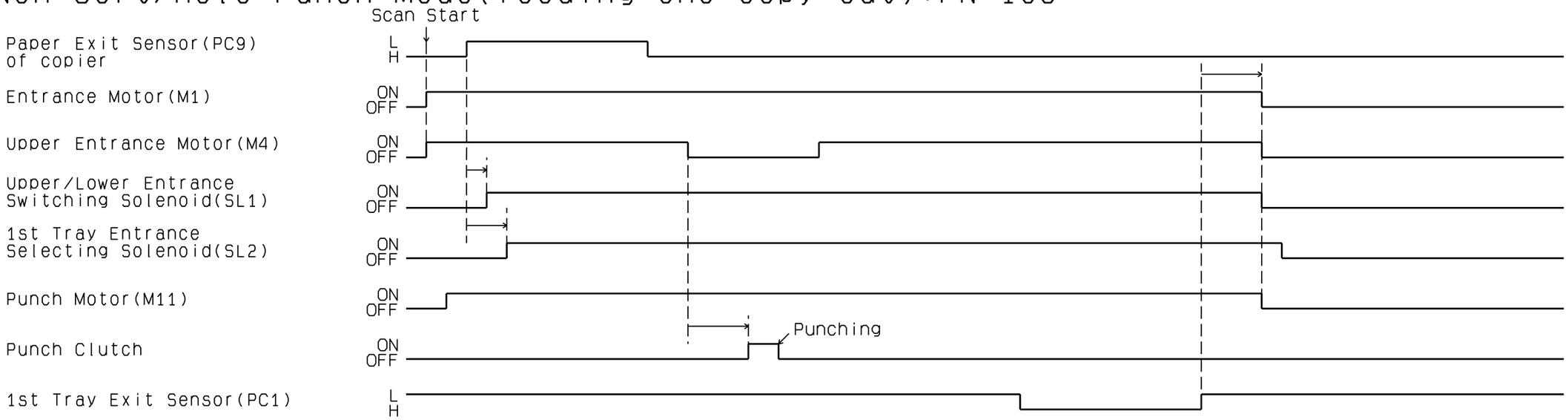

PWB-A
制御基板/
Control Board

DWG. NO.	4643-C001-0A
TITLE	WIRING DIAGRAM
MODEL	FN-105/FN-106
VOLTAGE	From the copier
EFFECTIVE MACHINE NO.	XX0201 AND ONWARD
DATE ISSUED	Aug. 2000

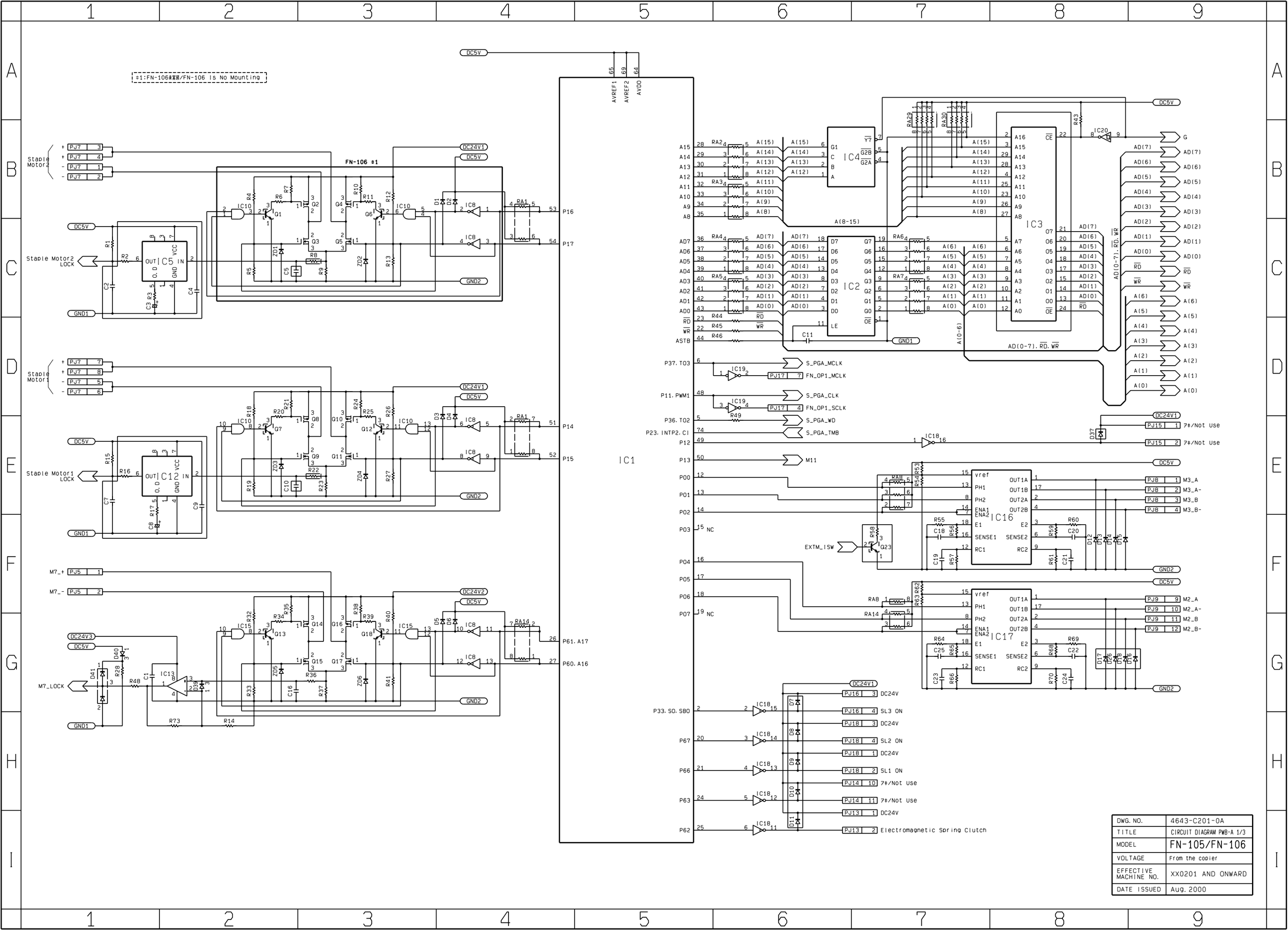

DWG. NO.	4643-C201-0A
TITLE	CIRCUIT DIAGRAM PWB-A 1/3
MODEL	FN-105/FN-106
VOLTAGE	From the copier
EFFECTIVE MACHINE NO.	XX0201 AND ONWARD
DATE ISSUED	Aug. 2000

#1:FN-106##/FN-106 Is No Mounting

IC28
IC29
IC30
IC31
IC1
IC6
IC9
IC15
IC19
IC20
IC21
IC22
IC24
IC25
IC32

DWG. NO.	4643-C202-0A
TITLE	CIRCUIT DIAGRAM PWB-A 2/3
MODEL	FN-105/FN-106
VOLTAGE	From the copier
EFFECTIVE MACHINE NO.	XX0201 AND ONWARD
DATE ISSUED	Aug. 2000

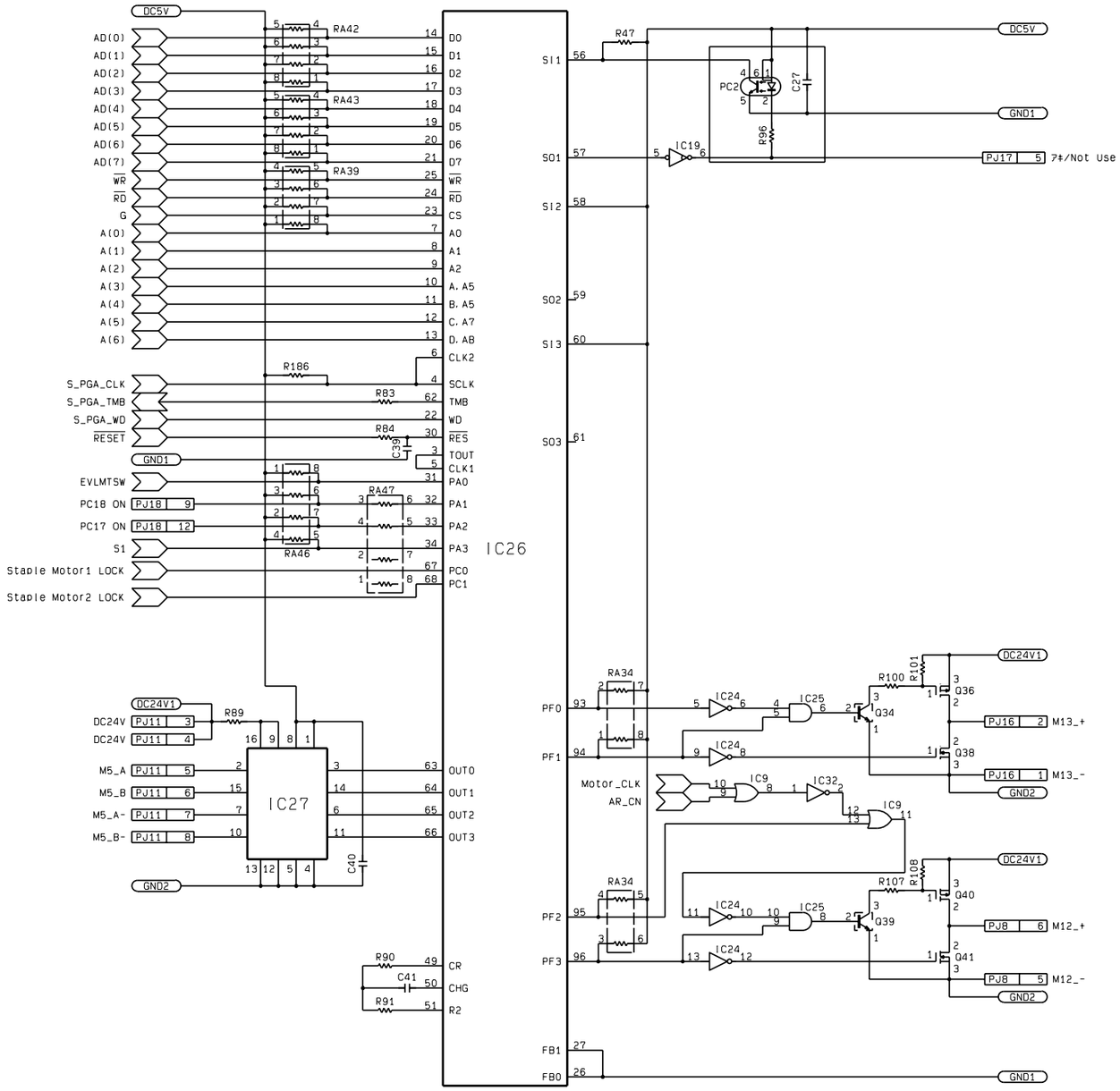

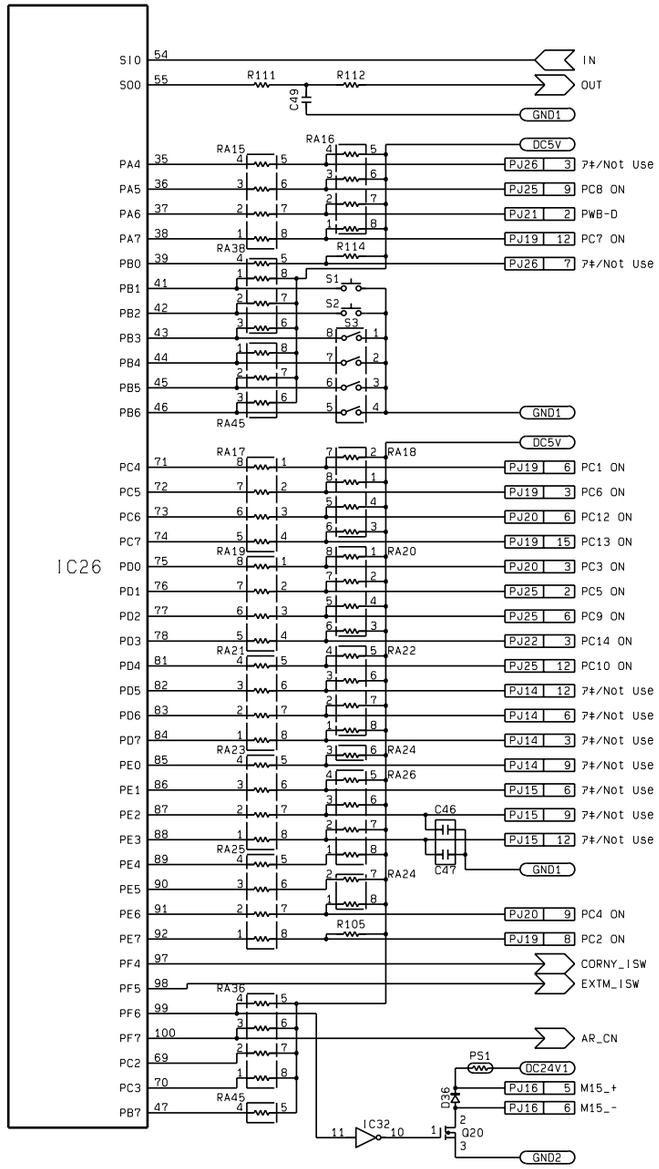

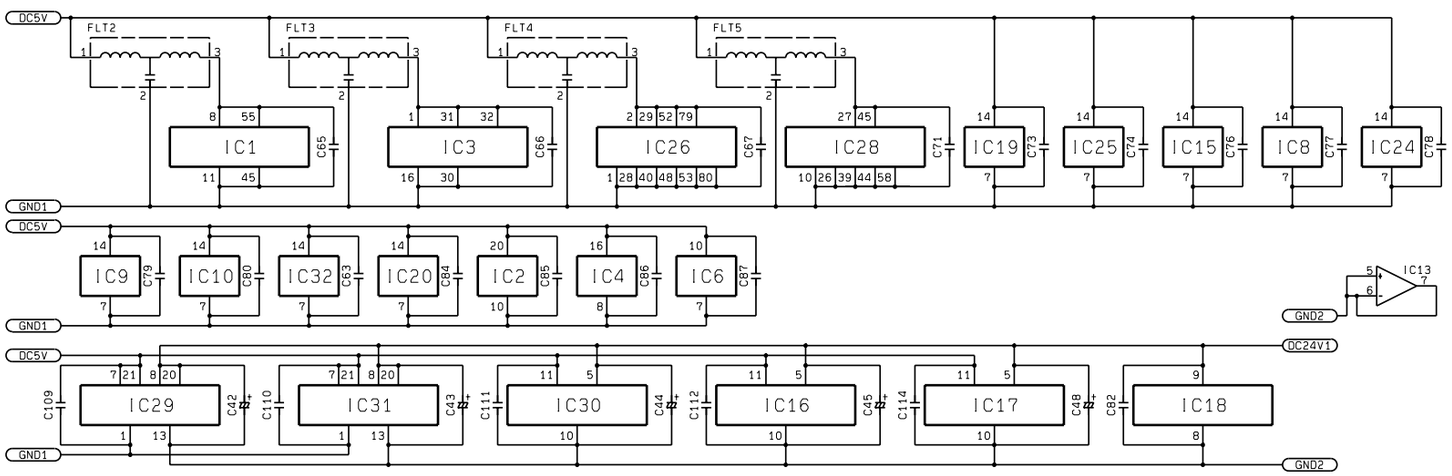

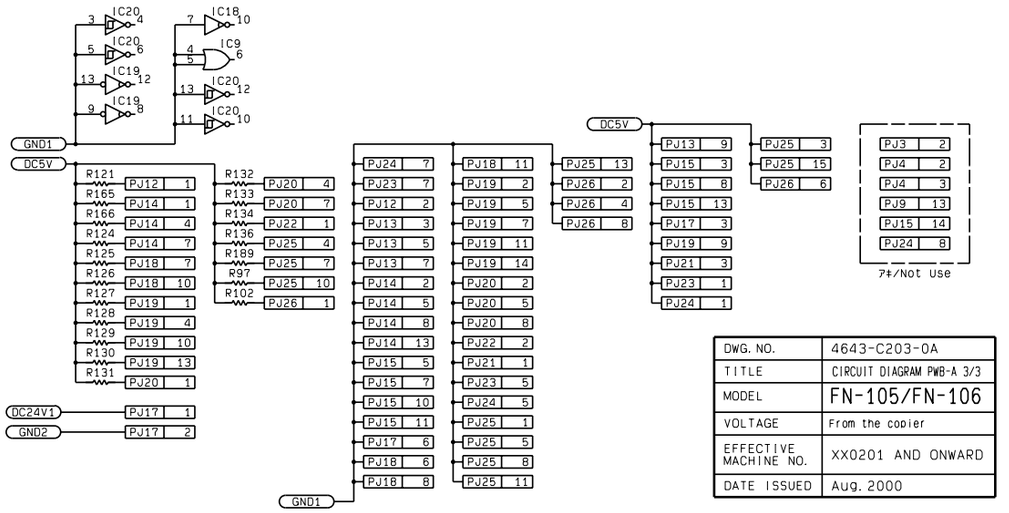

DWG. NO.	4643-C203-0A
TITLE	CIRCUIT DIAGRAM PWB-A 3/3
MODEL	FN-105/FN-106
VOLTAGE	From the copier
EFFECTIVE MACHINE NO.	XX0201 AND ONWARD
DATE ISSUED	Aug. 2000

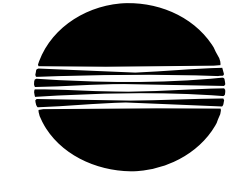

Copyright
2000 MINOLTA Co., Ltd.
Printed in Japan

Use of this manual should be strictly supervised to avoid disclosure of confidential information.

Issued for Di450/Di550 and Other Models.

MINOLTA Co., Ltd.

4641-7990-11 00091200
10794