Di450

PARTS MANUAL

MINOLTA

SFIX CHART

SFIX No.	COUNTRY	VOLTAGE	FREQUENCY (Hz)	PAPER SIZE	SFIX No.	COUNTRY	VOLTAGE	FREQUENCY (Hz)	PAPER SIZE
011	JAPAN	100	50/60	METRIC	311	USA/CANADA	120	60	INCH
211	EUROPE	220-240	50/60	METRIC	312	USA/CANADA (GOVERNMENT)	120	60	INCH
212	S AFRICA AUSTRALIA S ARABIA RUSSIA HONG KONG	220-240	50/60	INCH/METRIC	313	TAIWAN	115	60	METRIC
214	PHILIPPINE L AMERICA	220-240	50/60	INCH/METRIC	314	S ARABIA CURACAO BRAZIL	120-127	60	INCH/METRIC
218	KOREA	220	60	METRIC					

CONTENTS

1. HOUSING (A) • • •

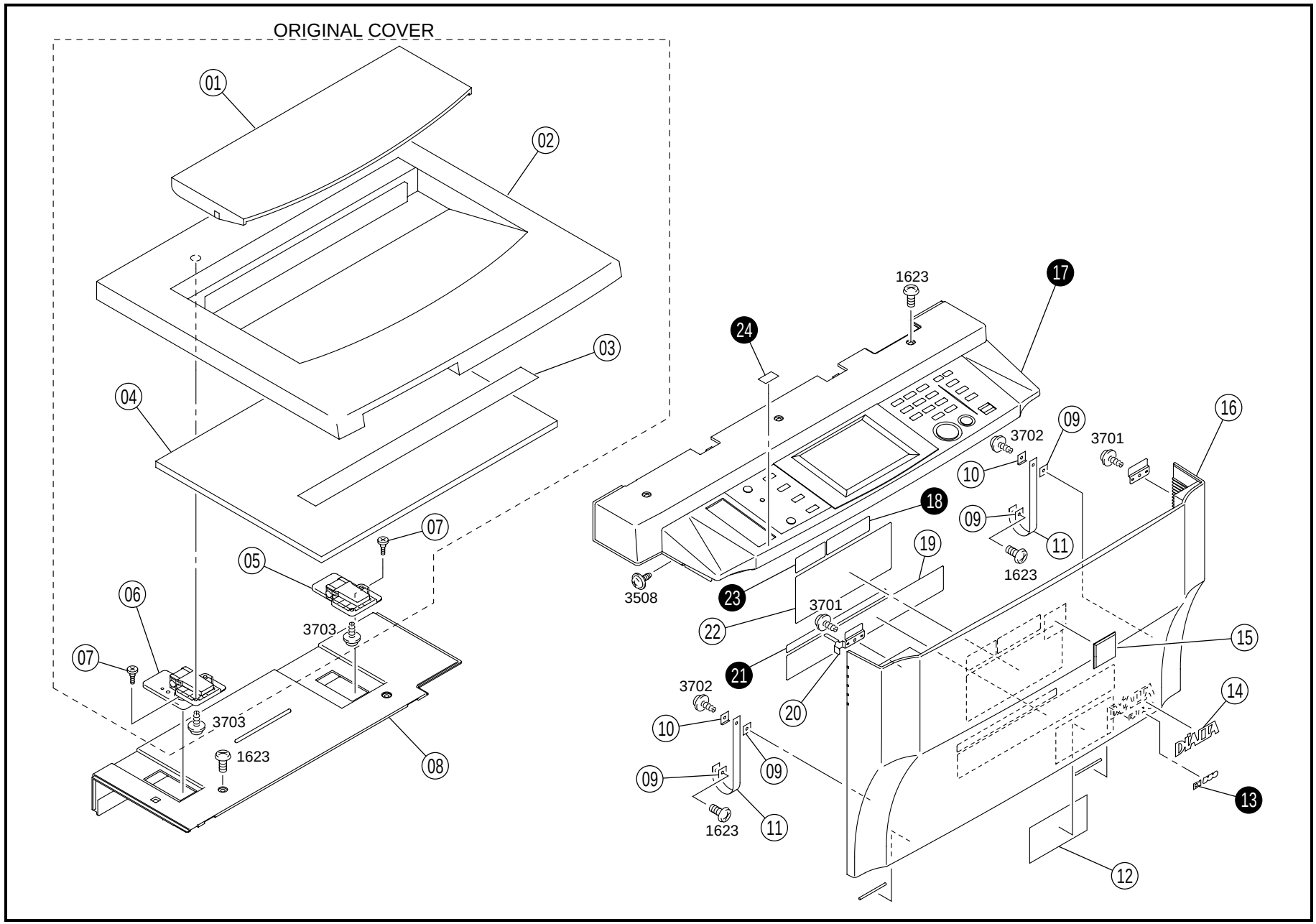
ORIGINAL COVER
01
02
03
04
05
06
07
08
3703
1623
1623
17
24
3702
09
3701
16
10
18
09
11
19
1623
3508
23
3701
22
15
21
20
3702
14
10
09
09
13
11
1623
12

INDEX	PART NO.	PART NAME	REC	QTY	INDEX	PART NO.	PART NAME	REC	QTY
01	4002-1603-01	HOLDER		1					
02	1171-1125-02	COVER		1					
03	4002-1605-01	SEAL		1					
04	4002-1604-01	ORIGINAL COVER MAT		1					
05	4002-1602-01	HINGE		1					
06	4002-1601-01	HINGE		1					
07	4002-1606-01	SHOULDER SCREW		2					
08	4002-1003-01	COVER		1					
09	1053-3103-01	PLATE		4					
10	4002-1012-01	SET PLATE		2					
11	1054-5101-02	BAND		2					
12	1155-7320-12	LABEL ADJUST		1					
14	4002-7316-01	LABEL		1					
15	4002-7305-01	LABEL		1					
16	4002-1001-01	FRONT COVER		1					
19	4002-7304-02	LABEL		1					
20	1136-1046-01	PLATE		1					
22	4002-7303-02	LABEL		1					

INDEX	PART NO.	PART NAME	REC	QTY	SFIX
13	4003-7301-01	LABEL		1	011, 211, 212, 214, 218, 313, 314
17	4002-0113-02	CONTROL PANEL ASSY	RP	1	011
17	4002-0114-02	CONTROL PANEL ASSY	RP	1	212, 214, 218, 311, 312, 313, 314
17	4002-0115-02	CONTROL PANEL ASSY	RP	1	211
18	1139-7328-01	LABEL AVOID		1	312
21	4002-7321-01	LABEL		1	011
21	4002-7322-01	LABEL		1	212, 214, 218, 311, 312, 313, 314
21	4002-7323-01	LABEL		1	211
23	1136-7320-02	LABEL		1	011
24	4003-7325-01	LABEL		1	311, 312

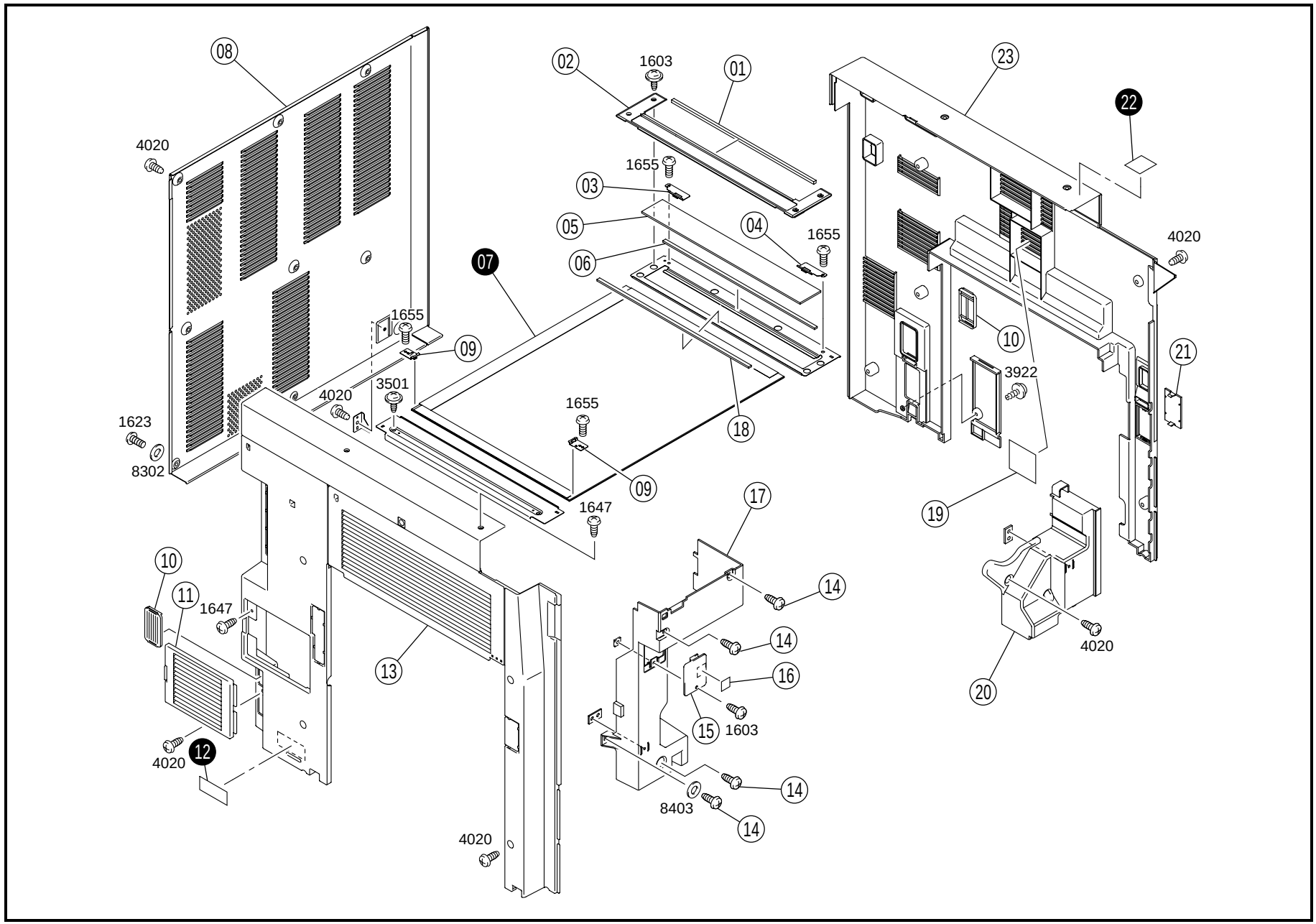
08
4020
02
1603
01
23
22
1655
03
05
04
1655
06
07
4020
10
21
1655
09
3922
3501
4020
1655
18
1623
8302
09
1647
19
17
10
11
1647
14
14
13
16
15
1603
4020
12
14
8403
14
4020
20
4020

INDEX	PART NO.	PART NAME	REC	QTY	INDEX	PART NO.	PART NAME	REC	QTY
01	1155-1618-01	CUSHION		1	21	1174-1015-01	COVER		1
02	4002-1310-02	GUIDE		1	23	4002-1004-03	COVER		1
03	1155-1610-01	SUPPORT PLATE		1					
04	1155-1609-01	SUPPORT PLATE		1					
05	1155-1602-03	ORIGINAL GLASS		1					
06	1155-1630-01	SPONGE		1					
08	4002-1002-01	COVER		1					
09	4002-1317-01	SET PLATE		2					
10	9384-2310-41	COVER		2					
11	4002-1006-01	COVER		1					
13	4002-1005-02	COVER		1					
14	4002-2581-01	SCREW		4					
15	1156-1027-01	COVER		1					
16	1075-7345-01	SEAL		1					
17	4002-1020-01	COVER		1					
18	1155-1631-01	POLYESTER FILM		1					
19	4002-1043-01	FILTER		1					
20	4002-1041-01	COVER		1					

INDEX	PART NO.	PART NAME	REC	QTY	SFIX
07	1155-0155-03	ORIGINAL GLASS		1	011, 313
07	1155-0156-03	ORIGINAL GLASS		1	214, 311, 312
07	1155-0157-03	ORIGINAL GLASS		1	211, 212, 218, 314
12	0818-7319-01	LABEL CAUTION		1	211
22	4002-7315-02	LABEL		1	011

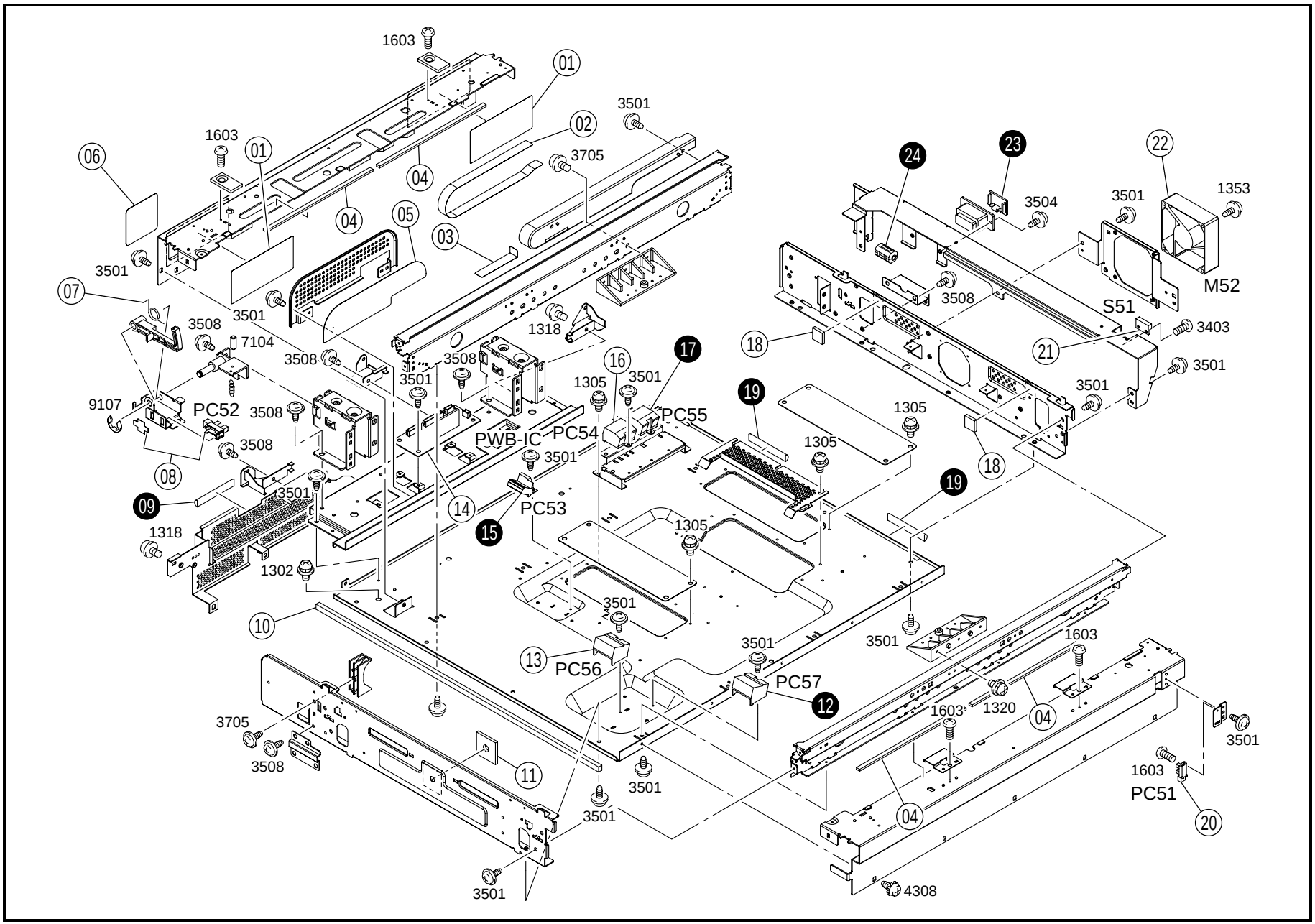
1603
01
3501
02
3705
1603
01
06
04
04
05
03
3501
07
3501
3508
7104
3508
3508
3501
1318
16
17
1305
3501
9107
PC52
3508
PWB-IC
PC54
PC55
3508
3501
08
3501
09
14
PC53
15
1318
1302
1305
10
3501
13
PC56
3501
PC57
12
3705
3508
11
3501
3501
3501
24
23
22
3504
3501
1353
M52
3508
S51
3403
18
21
3501
3501
19
1305
1305
18
19
3501
1603
1603
1320
04
3501
1603
PC51
20
04
4308

INDEX	PART NO.	PART NAME	REC	QTY	INDEX	PART NO.	PART NAME	REC	QTY
01	4002-1315-01	PROTECTION		2					
02	4002-1433-01	PROTECTION		1					
03	4002-1434-02	MEMBER		1					
04	1155-1619-01	CUSHION		4					
05	4002-1368-01	FILTER		1					
06	4002-1369-01	FILTER		1					
07	1139-1724-01	TORSION SPRING		1					
08	4002-0902-01	PHOTO INTERRUPTER ORIG COVER (PC52)		1					
10	4002-1329-01	SEAL		1					
11	4002-1319-01	CUSHION		1					
13	9335-1910-81	SOLID STATE SWITCH SIZE (PC56)		1					
14	4002-0105-03	PWB ASSY SCP (PWB-IC)	RP	1					
16	9335-1310-11	PHOTO INTERRUPTER SIZE (PC54)		1					
18	4002-1320-01	CUSHION		2					
20	9335-1310-41	PHOTO INTERRUPTER SCANNER (PC51)		1					
21	9334-2610-11	REED SWITCH SIZE RESET (S51)		1					
22	9313-1911-41	FAN MOTOR COLLING (M52)		1					

INDEX	PART NO.	PART NAME	REC	QTY	SFIX
09	4002-6209-01	MAGNETIC MEMBER		1	211, 212, 214, 218, 311
12	9335-1910-81	SOLID STATE SWITCH OPTION (PC57)		1	011, 211, 218, 311, 312, 313
12	9335-1910-81	SOLID STATE SWITCH SIZE (PC57)		1	212, 214, 314
15	9335-1910-71	SOLID STATE SWITCH OPTION (PC53)		1	311, 312
15	9335-1910-71	SOLID STATE SWITCH SIZE (PC53)		1	011, 211, 212, 214, 218, 313, 314
17	9335-1310-11	PHOTO INTERRUPTER OPTION (PC55)		1	011, 211, 218, 311, 313
17	9335-1310-11	PHOTO INTERRUPTER SIZE (PC55)		1	212, 214, 314
19	4002-6210-01	MAGNETIC MEMBER		2	211, 212, 214, 218, 313
23	9384-2910-11	CN COVER		1	011, 212, 214, 218, 313, 314
24	9326-1910-21	FERRITE CORE		1	211, 212, 214, 218, 313

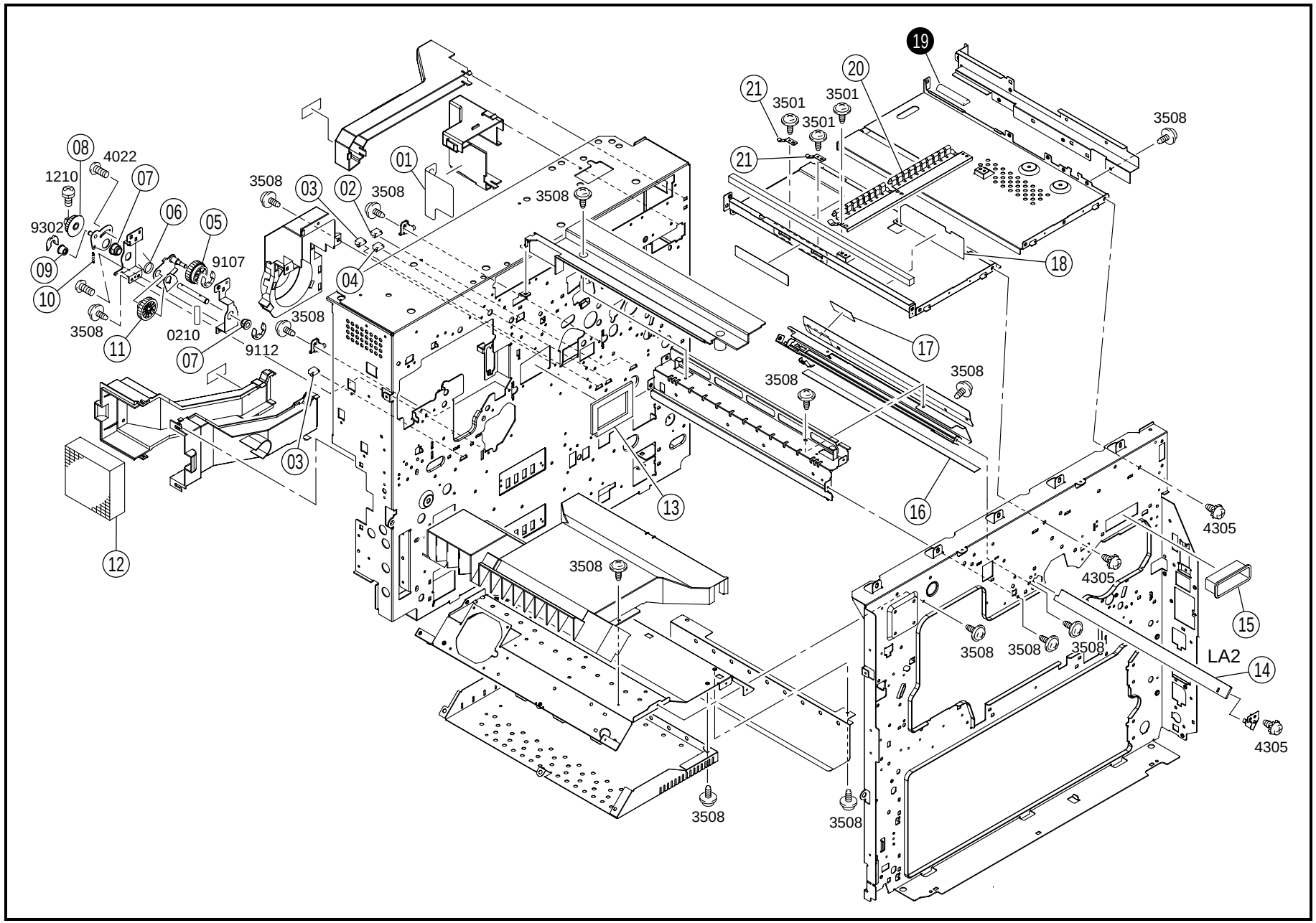
01
02
03
04
05
06
07
08
09
10
11
12
13
14
15
16
17
18
19
20
21
LA2
1210
4022
9302
9107
0210
9112
3501
3508
4305

INDEX	PART NO.	PART NAME	REC	QTY
01	4002-2037-01	DUCT		1
02	9383-2910-11	PLUG HOUSING		1
03	9383-2310-31	CONNECTOR 4P		2
04	9383-2210-41	CONNECTOR 3P		1
05	4002-2521-01	GEAR		1
06	4002-2537-01	TORSION SPRING		1
07	4002-2542-01	BUSHING		2
08	4002-2517-01	GEAR		1
09	1274-2605-01	PULLEY 14T		1
10	4002-2538-01	TENSION SPRING		1
11	4002-2522-01	GEAR		1
12	1136-4018-01	OZONE FILTER	RP	1
13	1156-4013-01	SEAL		1
14	9351-1410-11	TUBE LAMP MAIN ERASE (LA2)	RP	1
15	4002-5253-01	COVER		1
16	1136-4513-01	FILTER		1
17	1136-3406-01	POLYESTER FILM		1
18	4002-2035-01	SEAL		1
19	4002-6210-01	MAGNETIC MEMBER		1

INDEX	PART NO.	PART NAME	REC	QTY
20	4002-2417-01	PLATE SPRING		1
21	4002-2404-01	EARTH GROUND		2

SFIX

211, 212, 214, 218, 313

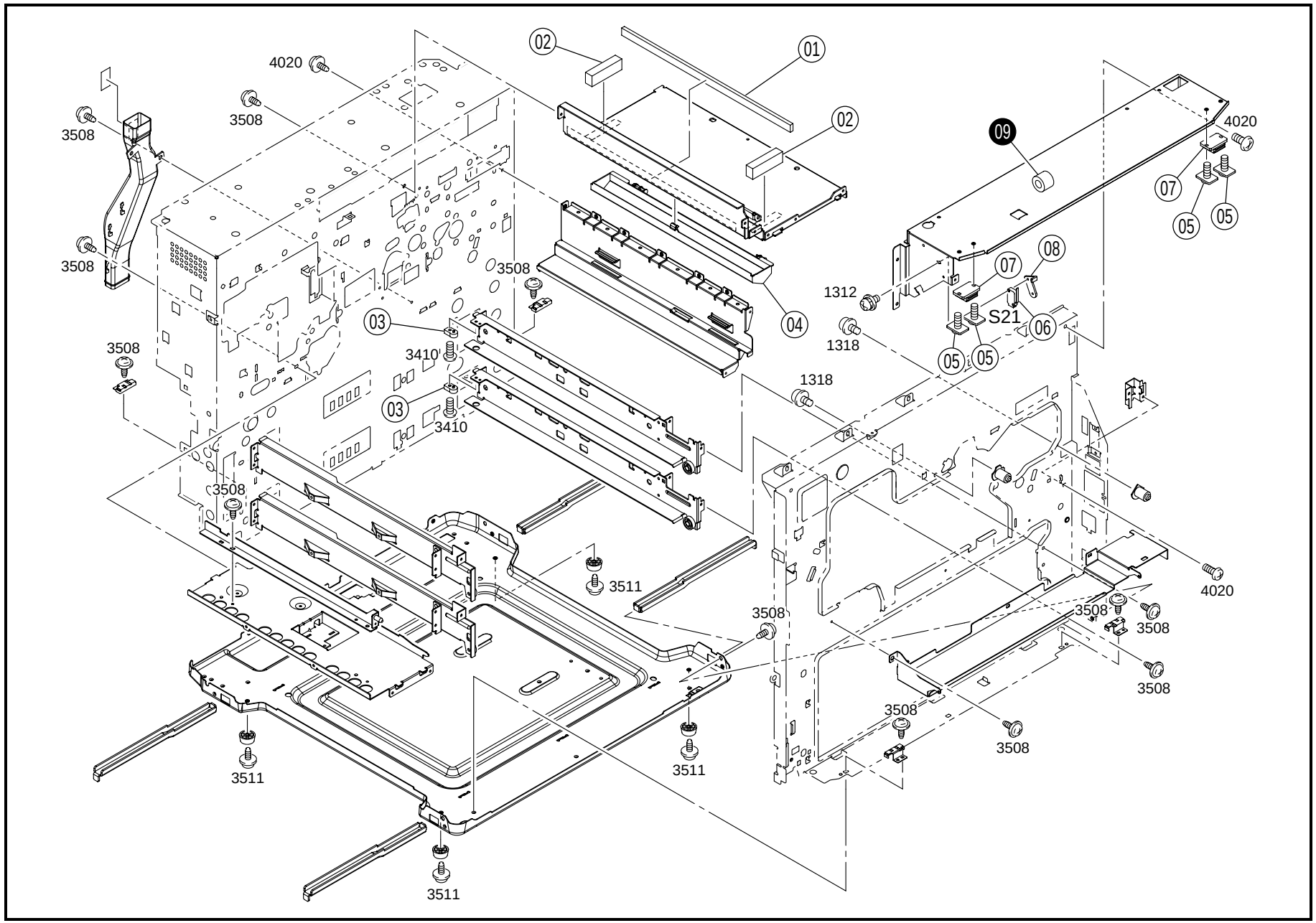
01
02
02
03
03
04
05
05
05
05
06
07
07
08
09
S21
1312
1318
1318
3410
3410
3508
3508
3508
3508
3508
3508
3508
3508
3508
3508
3508
3508
3511
3511
3511
3511
4020
4020
4020

INDEX	PART NO.	PART NAME	REC	QTY	INDEX	PART NO.	PART NAME	REC	QTY
01	4002-2039-01	SEAL		1					
02	4002-2038-01	SEAL		2					
03	4002-3125-01	HOLDER		2					
04	4002-2014-01	COVER		1					
05	1053-1324-01	TAPPING SCREW		4					
06	9331-2710-11	MICRO SWITCH FRONT DOOR (S21)		1					
07	1500-2640-04	MAGNET CATCH		2					
08	1076-1203-02	PLATE NUT		1					

INDEX	PART NO.	PART NAME	REC	QTY	SFIX
09	9326-1610-21	FERRITE CORE		1	211, 212, 214, 218, 313

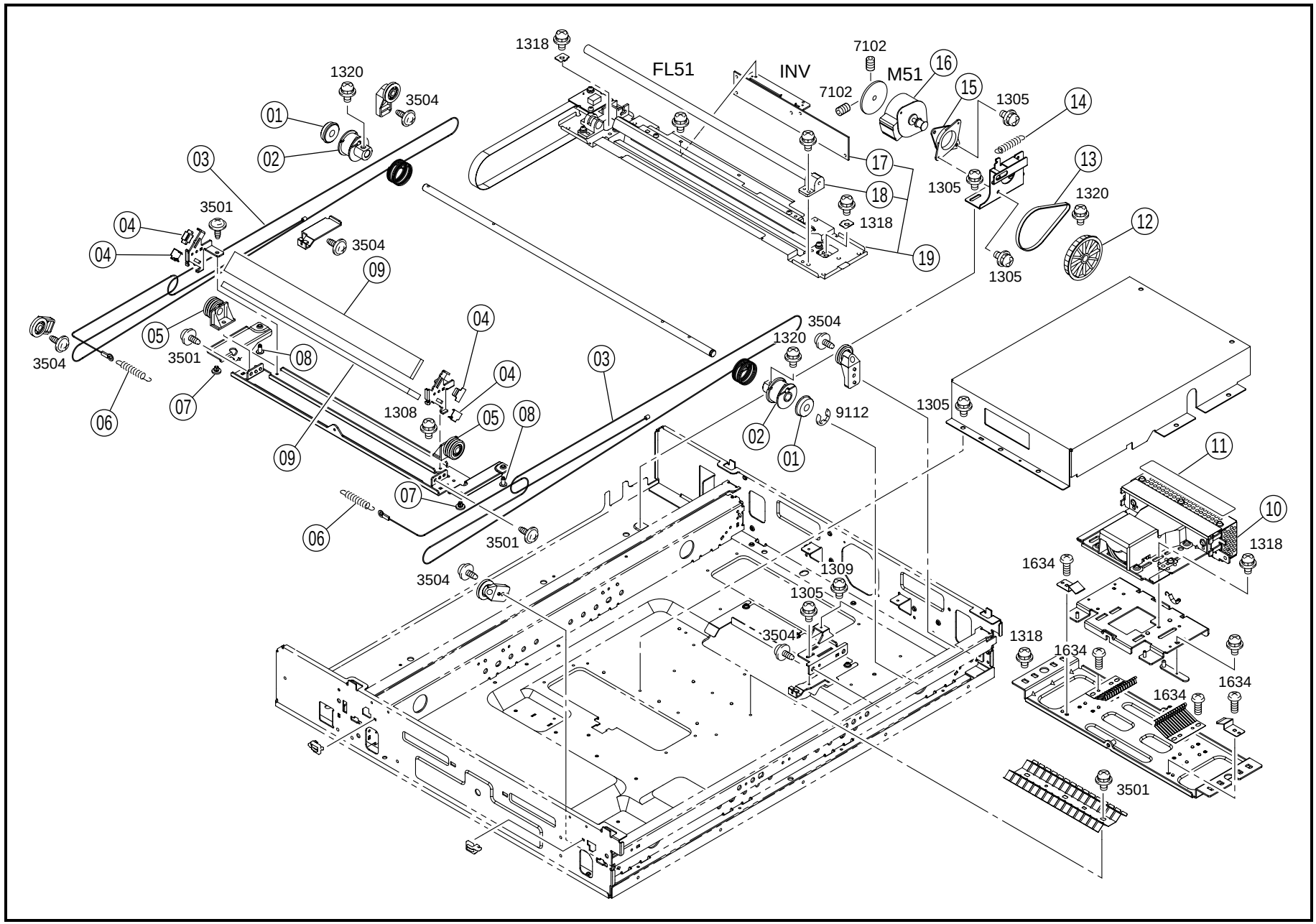
1318
FL51
INV
7102
M51
16
15
1305
14
1320
3504
01
02
03
17
18
1318
19
1305
13
1320
12
1305
3501
04
04
3504
09
05
3501
08
3504
06
07
04
04
1308
05
08
09
07
06
3501
3504
03
3504
1320
02
01
9112
1305
11
10
1318
1634
1309
1305
3504
1318
1634
1634
1634
3501

INDEX	PART NO.	PART NAME	REC	QTY
01	4002-1456-01	BUSHING		2
02	4002-1452-01	PULLEY		2
03	4002-1451-01	WIRE		2
04	4002-1423-01	HOLDER		4
05	4002-1424-01	PULLEY ASSY		2
06	4002-1468-01	TENSION SPRING		2
07	4002-1480-01	BUSHING		2
08	4002-1481-01	BUSHING		2
09	4002-1422-02	MIRROR		2
10	4002-0306-02	CCD UNIT		1
11	4002-6206-01	MAGNETIC MEMBER		1
12	4002-1453-01	PULLEY		1
13	4002-1454-01	TIMING BELT		1
14	4002-1458-01	TENSION SPRING		1
15	4002-1471-01	CUSHION		1
16	9314-1910-81	MOTOR SCANNER (M51)		1
17	4002-7802-01	PWB ASSY INVERTER (INV)		1
18	4002-7801-01	LAMP EXPOSURE (FL51)	RP	1
19	4002-0151-01	EXPOSURE UNIT		1

INDEX	PART NO.	PART NAME	REC	QTY	SFIX

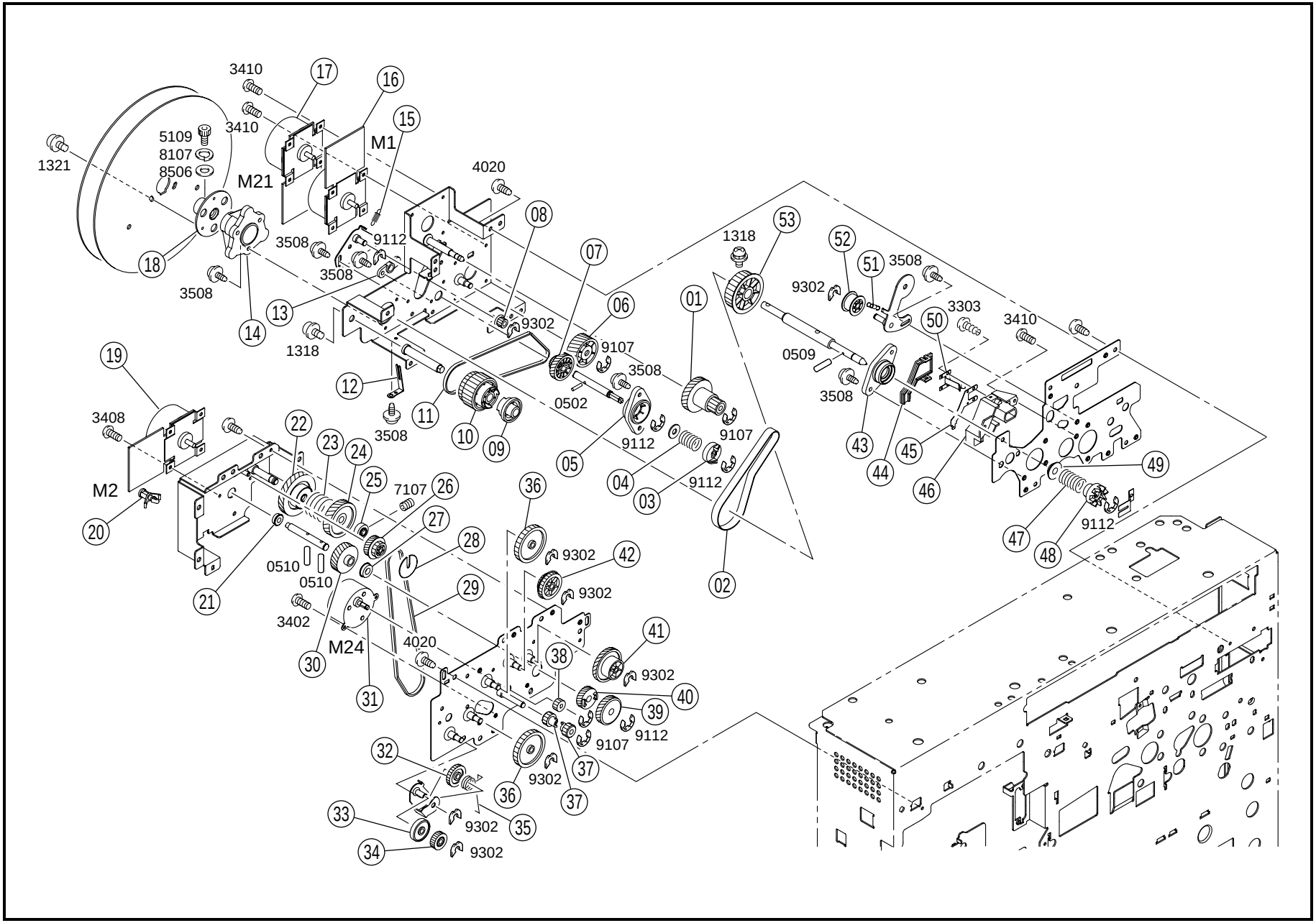
3410
17
16
15
M1
3410
5109
8107
8506
1321
M21
4020
08
3508
9112
3508
18
3508
14
13
1318
07
06
9302
9107
3508
0502
01
1318
53
52
51
3508
9302
3303
50
3410
0509
3508
43
44
45
46
49
47
48
9112
19
3408
M2
20
22
23
24
25
7107
26
27
28
0510
0510
21
3402
M24
30
31
29
4020
36
9302
42
9302
38
41
9302
40
39
9112
9107
37
37
36
9302
32
33
9302
35
34
9302
05
04
03
9112
9107
9112
02

INDEX	PART NO.	PART NAME	REC	QTY
01	4002-2557-01	GEAR		1
02	4002-2566-01	TIMING BELT		1
03	1136-2528-01	PAWL		1
04	1400-1185-10	PRESSURE SPRING		1
05	4002-2578-01	BUSHING		1
06	4002-2565-01	GEAR		1
07	4002-2564-01	GEAR		1
08	1067-2566-01	PULLEY 18T		1
09	1136-5507-01	CAM		1
10	4002-2563-01	GEAR		1
11	4002-2567-01	TIMING BELT		1
12	4002-2575-01	PLATE SPRING		1
13	1065-2753-01	BUSHING		1
14	4002-2568-01	HOLDER		1
15	4002-2577-01	TENSION SPRING		1
16	9314-2910-81	MOTOR DEVELOPING U (M1)		1
17	9314-2910-71	MOTOR PC DRUM (M21)		1
18	1155-2503-01	HOLDER		1
19	9314-2910-91	MOTOR FUSING (M2)		1
20	9384-1621-21	PWB SUPPORT 6.4H		1
21	1300-4342-07	BALL BEARING		1
22	4002-2502-01	GEAR		1
23	4002-2582-01	TORSION SPRING		1
24	4002-2503-02	GEAR		1
25	1200-3434-03	COLLAR		1
26	4002-2523-01	GEAR		1
27	4002-2546-01	BALL BEARING		1

INDEX	PART NO.	PART NAME	REC	QTY
28	4002-2580-01	FLANGE		1
29	4002-2528-01	BELT		1
30	4002-2540-01	GEAR		1
31	9311-3910-11	MOTOR CLEANING WE (M24)		1
32	4002-2544-01	GEAR		1
33	4002-2531-01	SPACER		1
34	4002-2501-01	GEAR		1
35	4002-2536-02	TORSION SPRING		1
36	4002-2543-02	GEAR		2
37	4002-2525-01	GEAR		2
38	4002-2541-01	GEAR		1
39	4002-2506-01	GEAR		1
40	4002-2545-02	GEAR		1
41	4002-2507-02	GEAR		1
42	4002-2509-02	GEAR		1
43	4002-2571-01	HOLDER		1
44	4002-5033-01	LID		1
45	4002-5032-01	TERMINAL		1
46	4002-5030-01	HOLDER		1
47	4002-2552-01	SPRING		1
48	4002-2551-01	PAWL		1
49	4002-2555-01	HOLDER		1
50	4002-5031-01	TERMINAL		1
51	4002-2574-02	TENSION SPRING		1
52	1136-2530-02	PULLEY		1
53	4002-2556-01	PULLEY		1

INDEX	PART NO.	PART NAME	REC	QTY	SFIX

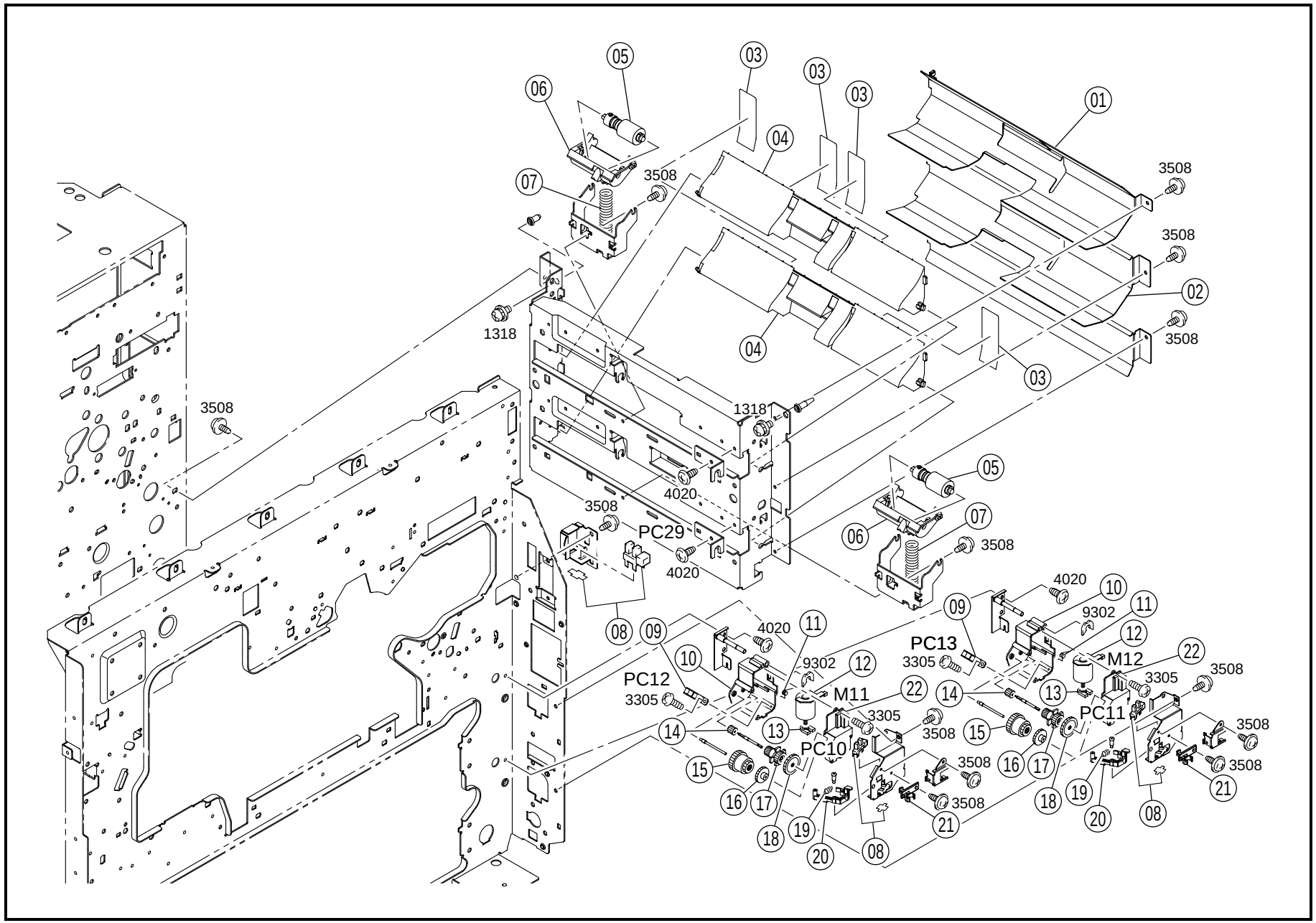
01
02
03
04
05
06
07
08
09
10
11
12
13
14
15
16
17
18
19
20
21
22
3508
1318
4020
9302
3305
PC29
PC10
PC11
PC12
PC13
M11
M12

INDEX	PART NO.	PART NAME	REC	QTY
01	4002-3303-02	GUIDE PLATE		1
02	4002-3302-02	GUIDE PLATE		1
03	4002-3344-01	GUIDE		4
04	4002-3304-01	GUIDE		2
05	4425-0152-02	ROLLER	RP	2
06	4425-3021-02	HOLDER		2
07	4425-3024-01	PRESSURE SPRING		2
08	4002-0902-01	PHOTO INTERRUPTER (PC10.11.29)		3
09	9335-1310-41	PHOTO INTERRUPTER DRWR PU (PC12.13)		2
10	4425-3204-13	HOLDER		2
11	4425-3225-02	TORSION SPRING		2
12	4002-0751-01	MOTOR ASSY LIFT-UP (M11.M12)		2
13	4425-3227-02	SUPPORT		2
14	4425-3208-01	GEAR 12T		2
15	4425-3212-01	GEAR 16/40T		2
16	4425-3206-01	GEAR 18/48T		2
17	4425-3205-01	GEAR 28/30T		2
18	4425-3207-01	GEAR 60T		2
19	4425-3242-02	TENSION SPRING		2
20	4425-3241-03	LEVER		2
21	4002-3123-01	HOLDER		2
22	4425-3224-13	COVER		2

INDEX	PART NO.	PART NAME	REC	QTY	SFIX

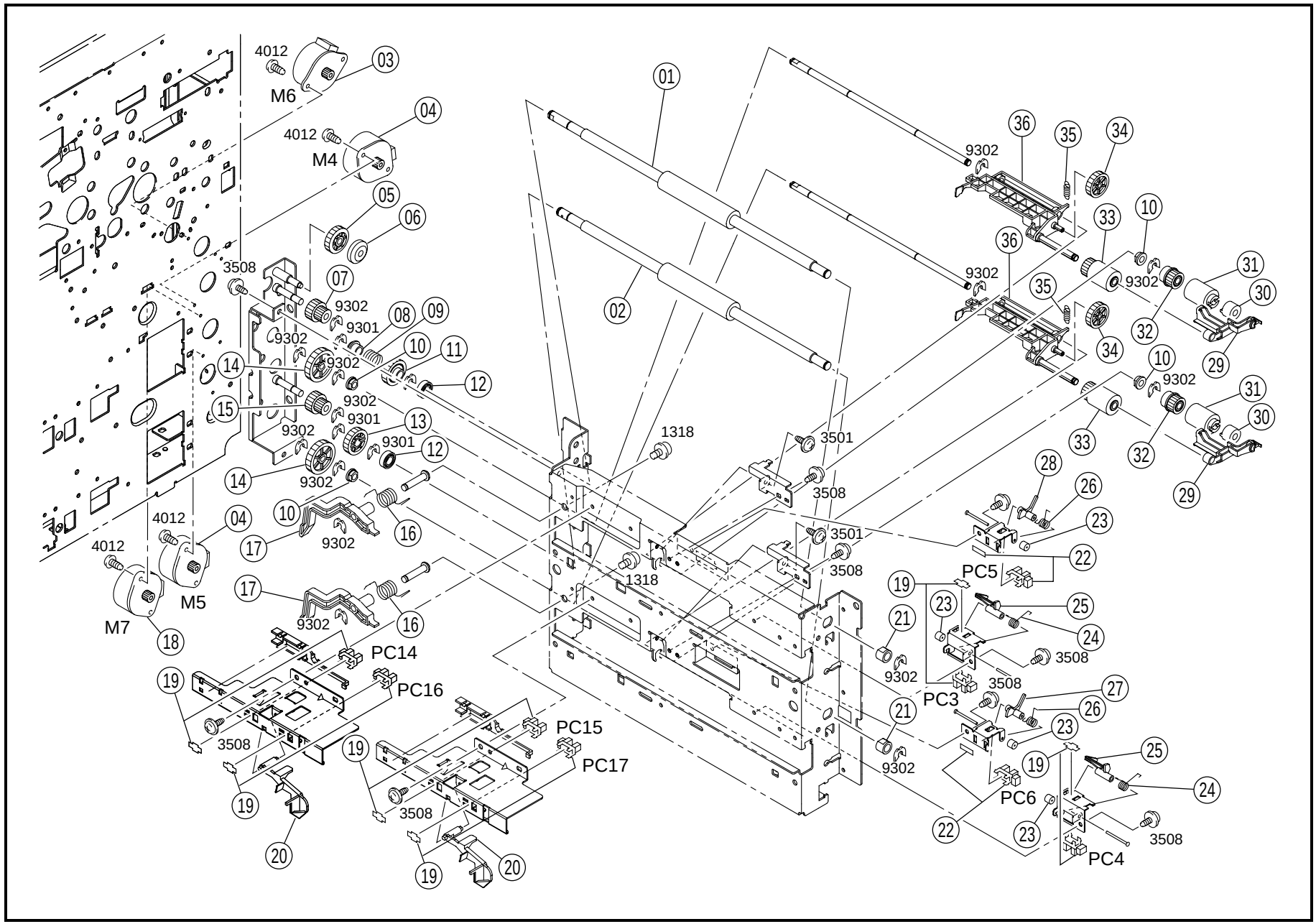
01
02
03
04
05
06
07
08
09
10
11
12
13
14
15
16
17
18
19
20
21
22
23
24
25
26
27
28
29
30
31
32
33
34
35
36
4012
M6
M4
M5
M7
3508
9302
9301
1318
3501
PC3
PC4
PC5
PC6
PC14
PC15
PC16
PC17

INDEX	PART NO.	PART NAME	REC	QTY
01	4002-3306-01	ROLLER		1
02	4002-3305-01	ROLLER		1
03	9314-1000-41	MOTOR VERT TRANS (M6)		1
04	9314-1911-43	MOTOR TAKE-UP (M4.5)		2
05	4002-3343-01	GEAR		1
06	4002-3325-01	COLLAR		1
07	4002-3340-01	GEAR		1
08	4002-3326-01	COLLAR		1
09	4425-3130-01	CLUTCH SPRING		1
10	1159-1938-01	BUSHING		4
11	4002-3339-01	GEAR		1
12	1273-3516-01	BALL BEARING		2
13	4002-3338-01	GEAR		1
14	4002-3341-01	GEAR		2
15	4002-3342-01	GEAR		1
16	4002-3212-01	TORSION SPRING		2
17	4002-3211-02	LEVER		2
18	9314-1000-51	MOTOR VERT TRANS (M7)		1
19	4002-0902-01	PHOTO INTERRUPTER (PC5.6.14-17)		6
20	4002-3208-02	LEVER		2
21	1200-3134-16	BUSHING		2
22	4122-0901-01	PHOTO INTERRUPTER TAKE-UP (PC3.4)		2
23	1200-2105-05	COLLAR		4
24	4002-3330-01	TORSION SPRING		2
25	4002-3321-01	ACTUATOR		2
26	4425-3032-01	TORSION SPRING		2
27	4425-3626-01	ACTUATOR		1
28	4002-3322-01	ACTUATOR		1
29	4002-3214-05	GUIDE		2
30	4002-3217-01	CLUTCH		2
31	4002-3216-01	ROLLER	RP	2
32	4002-3203-01	GEAR		2
33	4002-3201-01	ROLLER	RP	2
34	4002-3209-01	GEAR		2
35	4002-3205-01	TENSION SPRING		2
36	4002-3206-03	HOLDER		2

INDEX	PART NO.	PART NAME	REC	QTY	SFIX

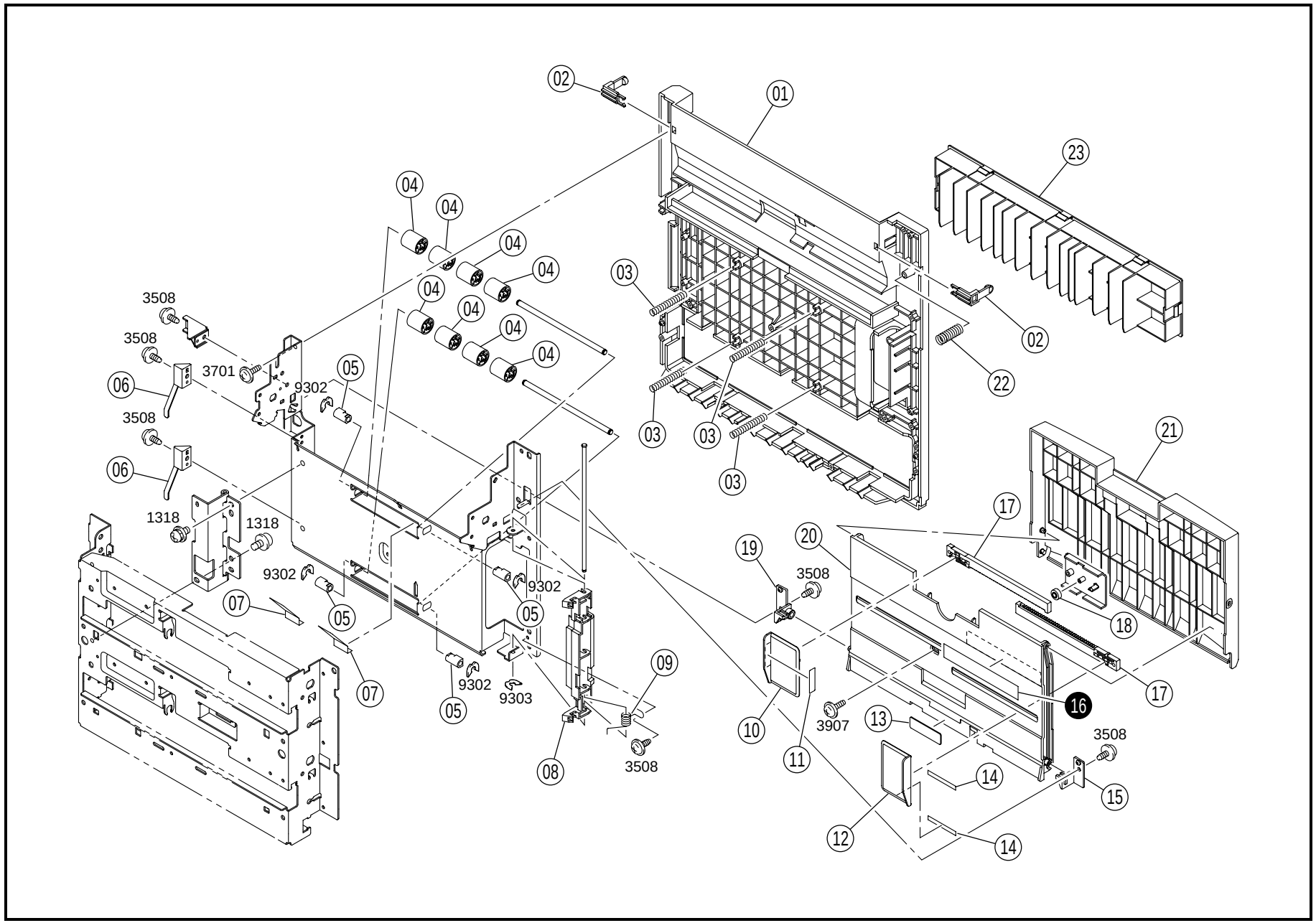
02
01
23
04
04
04
04
04
04
04
04
04
04
03
03
03
03
02
22
3508
3508
3701
9302
05
06
3508
06
1318
1318
9302
07
05
9302
05
07
05
9302
9303
09
08
3508
21
17
20
19
3508
18
17
16
3907
13
3508
10
11
14
15
12
14

INDEX	PART NO.	PART NAME	REC	QTY
01	4002-3307-03	DOOR		1
02	4002-3337-02	LEVER		2
03	4002-3320-02	PRESSURE SPRING		4
04	4425-3103-12	ROLL		8
05	4002-3331-02	BUSHING		4
06	4002-3318-01	STOPPER		2
07	4002-3345-01	GUIDE		2
08	4002-3335-01	LEVER		1
09	4002-3336-01	TORSION SPRING		1
10	4002-3413-01	GUIDE		1
11	4002-7312-01	LABEL		1
12	4002-3414-01	GUIDE		1
13	1052-5409-01	CORK		1
14	1065-3169-01	SLIDER		2
15	1136-3435-04	SUPPORT		1
17	1021-4429-02	RACK GEAR		2
18	4550-3457-01	GEAR 10T		1
19	1136-3437-03	SUPPORT		1
20	4002-3407-01	TABLE		1
21	4002-3408-02	COVER		1
22	1149-3454-01	PRESSURE SPRING		1
23	4002-3327-01	GUIDE		1

INDEX	PART NO.	PART NAME	REC	QTY	SFIX
16	4002-7310-01	LABEL		1	011, 211, 212, 218, 313, 314
16	4002-7311-01	LABEL		1	214, 311, 312

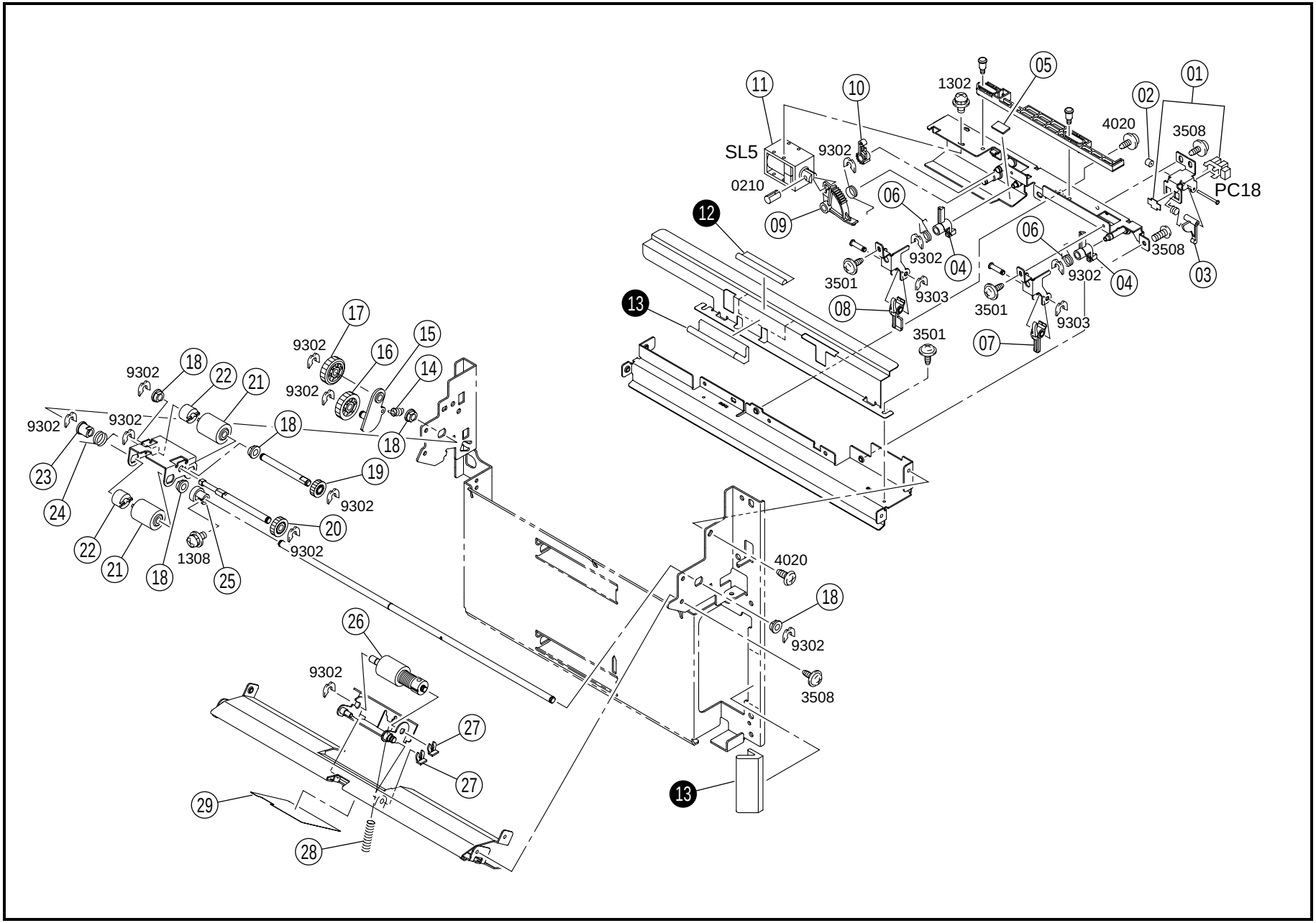
01
02
03
04
05
06
07
08
09
10
11
12
13
14
15
16
17
18
19
20
21
22
23
24
25
26
27
28
29
SL5
PC18
1302
4020
3508
9302
0210
3501
9303
1308

INDEX	PART NO.	PART NAME	REC	QTY
01	4002-0902-01	PHOTO INTERRUPTER PAPER EMPT (PC18)		1
02	1200-2105-05	COLLAR		1
03	1075-3356-02	ACTUATOR		1
04	1154-3322-01	PAWL		2
05	1139-3349-01	RUBBER STRIP		1
06	1139-3369-01	TORSION SPRING		2
07	1075-3389-01	STOPPER		1
08	1075-3390-01	LEVER		1
09	1139-3348-02	SEGMENT GEAR		1
10	1139-3370-01	GEAR 14T		1
11	9321-2810-31	SOLENOID MAN PICK-UP (SL5)		1
14	4002-3315-01	TENSION SPRING		1
15	4002-3314-01	LEVER		1
16	4002-3415-01	GEAR		1
17	4002-3416-01	GEAR		1
18	1159-1938-01	BUSHING		5
19	1139-3367-01	GEAR 19T		1
20	1139-3318-01	GEAR 22T		1

INDEX	PART NO.	PART NAME	REC	QTY
21	4002-3216-01	ROLLER		2
22	4002-3217-01	CLUTCH		2
23	1200-3225-11	BUSHING		1
24	4002-3418-01	TORSION SPRING		1
25	1139-3354-01	GEAR 17T		1
26	1136-0162-01	ROLLER	RP	1
27	1033-4402-01	STOPPER RING		1
28	1136-3409-01	PRESSURE SPRING		1
29	4002-3409-01	SEAL		1

INDEX	PART NO.	PART NAME	REC	QTY	SFIX
12	4002-6208-01	MAGNETIC MEMBER		1	211, 212, 214, 218, 313
13	4002-6203-01	MAGNETIC MEMBER		2	211, 212, 214, 218, 313

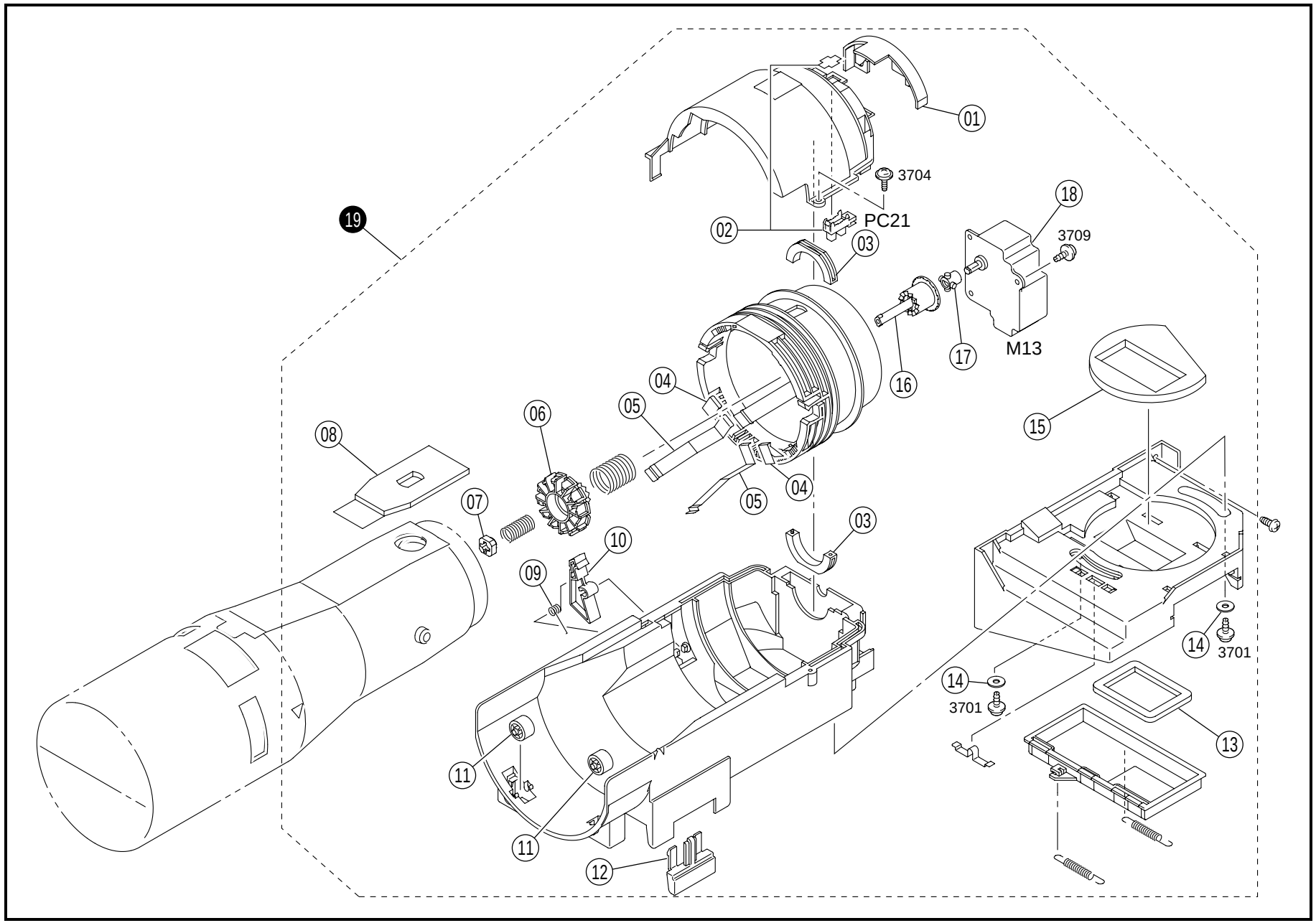
01
3704
PC21
02
03
18
3709
19
M13
17
16
15
04
05
06
08
07
10
09
03
14
3701
14
3701
13
11
11
12

INDEX	PART NO.	PART NAME	REC	QTY	INDEX	PART NO.	PART NAME	REC	QTY
01	4002-5258-01	COVER		1					
02	4002-0902-01	PHOTO INTERRUPTER BOTTLE HOM (PC21)		1					
03	1139-5023-01	SUPPORT		2					
04	1136-5240-01	POLYESTER FILM		2					
05	1136-5234-01	PLATE SPRING		2					
06	4002-5203-01	JOINT		1					
07	1156-5106-01	COLLAR		1					
08	4101-5206-01	SEAL		1					
09	1139-5022-01	TORSION SPRING		1					
10	1136-5235-01	LOCK LEVER		1					
11	1038-4701-01	ROLL		2					
12	1139-5020-02	LEVER		1					
13	4002-5254-01	SEAL		1					
14	1200-1431-01	WASHER		2					
15	1136-5212-01	SPONGE		1					
16	4114-5202-02	JOINT		1					
17	4002-5259-01	PIN		1					
18	9312-1910-21	MOTOR MAIN REPLEW (M13)		1					

INDEX	PART NO.	PART NAME	REC	QTY	SFIX
19	4002-0316-02	HOPPER UNIT		1	011, 211
19	4002-0317-02	HOPPER UNIT		1	212, 214, 218, 311, 312, 313, 314

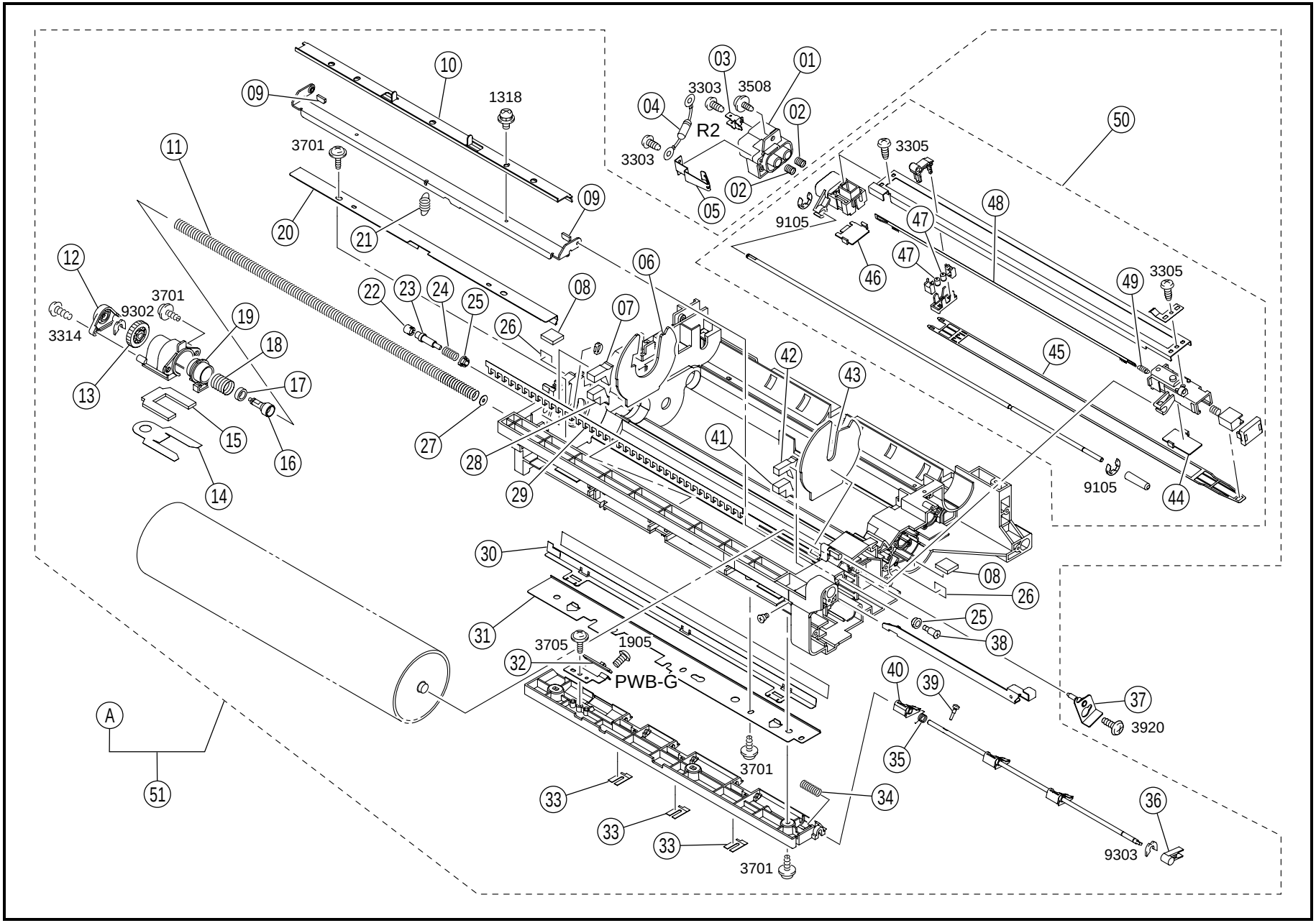
10
09
1318
3701
11
20
21
09
12
3701
9302
3314
19
18
17
13
15
16
14
22
23
24
25
26
08
07
06
27
28
29
42
43
41
30
31
3705
1905
32
PWB-G
A
51
03
01
3303
3508
04
02
R2
3303
02
05
3305
50
9105
47
48
47
46
49
3305
45
9105
44
08
26
25
38
37
3920
40
39
35
3701
33
34
33
33
3701
36
9303

INDEX	PART NO.	PART NAME	REC	QTY
01	1136-4112-03	HOLDER		1
02	1400-1122-10	PRESSURE SPRING		2
03	1136-4113-01	TERMINAL		1
04	1156-0368-01	RESISTER DRUM CHARGE (R2)		1
05	1134-4119-01	GROUND PLATE		1
06	1136-4202-02	SPONGE		1
07	1138-5516-02	SPONGE		1
08	1162-5583-01	SEAL	RP	2
09	1136-5537-01	SPONGE		2
10	1136-0901-01	CLEANING BLADE	RP	1
11	1136-5503-01	TRANSPORT COIL		1
12	1136-5515-01	BUSHING		1
13	1136-5506-01	GEAR 24T		1
14	1136-5523-03	POLYESTER FILM		1
15	1136-5533-01	SPONGE		1
16	1136-5528-01	SHAFT		1
17	1136-5517-01	SPONGE		1
18	1136-5532-01	PRESSURE SPRING		1
19	1136-5509-01	SHUTTER		1
20	1136-5522-01	BRACKET		1
21	1136-5505-01	TENSION SPRING		1
22	1036-4524-02	SLIDER		1
23	4002-5502-01	SHOULDER SCREW		1
24	1400-1154-06	PRESSURE SPRING		1
25	1038-4512-01	BUSHING		2
26	4002-5009-01	SEAL		2

INDEX	PART NO.	PART NAME	REC	QTY
27	1036-5514-01	WASHER		1
28	1136-4204-02	SPONGE		1
29	1134-5537-01	POLYESTER FILM		1
30	1013-5524-01	ANTISPILL PLATE	RP	1
31	1136-5520-01	PLATE		1
32	1149-0107-01	PW BOARD-G (AIDC) AIDC (PWB-G)	RP	1
33	1136-5535-01	POLYESTER FILM		3
34	1136-5521-01	PRESSURE SPRING		1
35	1136-5512-01	TORSION SPRING		3
36	1136-5516-03	LEVER		1
37	4002-0231-01	BRACKET ASSY		1
38	1100-1333-10	SHOULDER SCREW		1
39	1100-1901-01	SHOULDER SCREW		3
40	1134-0154-01	SEPARATOR	RP	3
41	1136-4205-02	SPONGE		1
42	1136-4209-01	SPONGE		1
43	1136-4203-02	SPONGE		1
44	1139-4264-01	COVER		1
45	1177-4261-01	GRID	RP	1
46	1156-4002-01	LID		1
47	1139-4257-01	ROLL		2
48	4002-4001-01	ELECTRODE NEEDLE	RP	1
49	1139-4263-01	TENSION SPRING		1
50	4002-0311-01	DRUM CHARGE CORONA		1
51	4002-0313-02	DEVELOPPING UNIT		1

INDEX	PART NO.	PART NAME	REC	QTY	SFIX

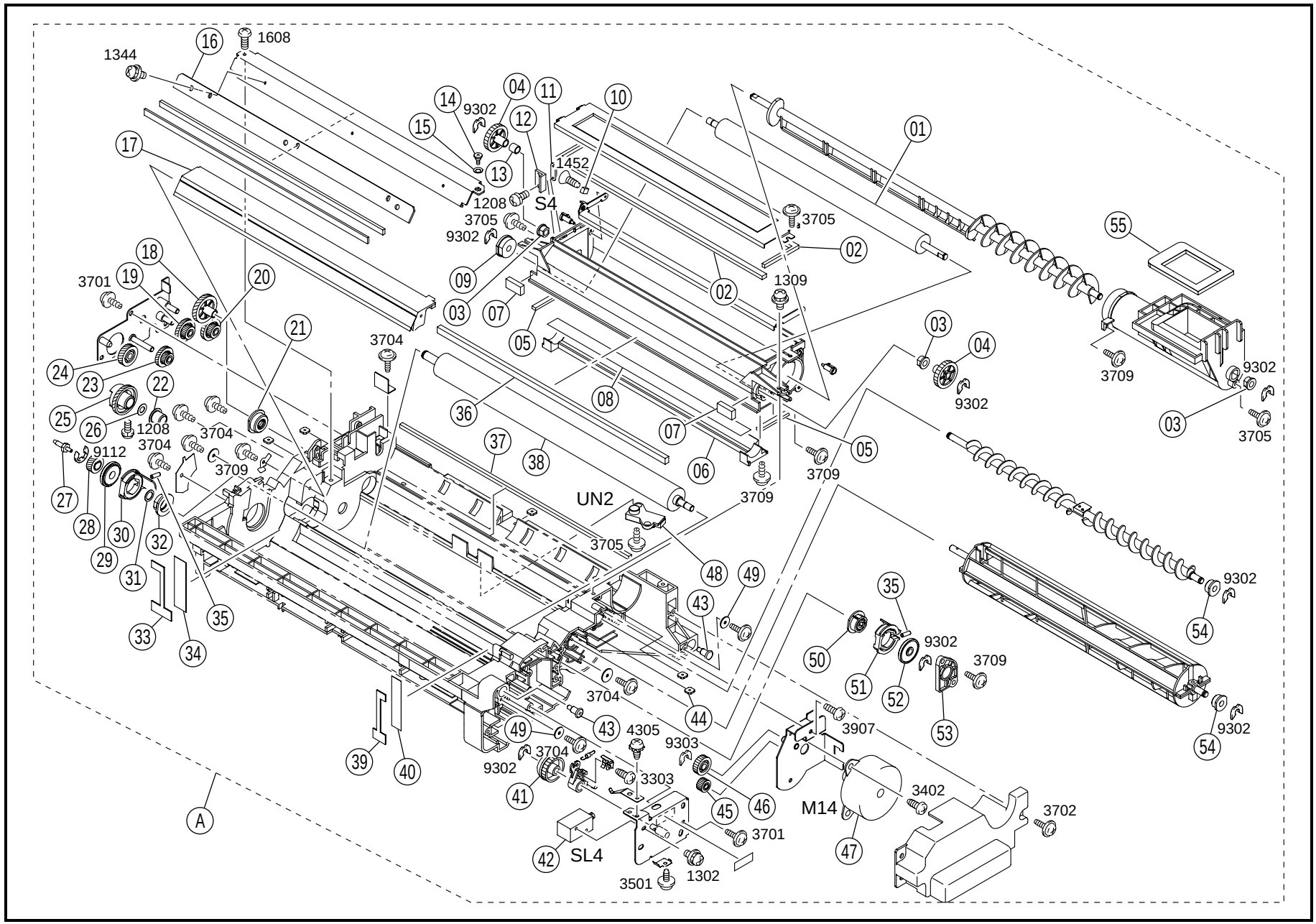
1344
1608
9302
1452
1208
S4
3705
9302
3705
1309
3701
3704
3704
1208
3704
9112
3709
3709
3709
3709
UN2
3705
3709
9302
9302
3705
9302
3709
3704
4305
9303
3704
9302
3303
3907
M14
3402
3702
3701
SL4
3501
1302
A

INDEX	PART NO.	PART NAME	REC	QTY
01	1155-5151-01	ROLLER		1
02	1134-5148-01	SEAL		2
03	1200-3223-12	BUSHING		3
04	1134-5115-01	GEAR 35T		2
05	1134-5158-01	SPONGE		2
06	1134-5146-12	REGULATION PLATE		1
07	1134-5164-01	SPONGE		2
08	1134-5132-01	POLYESTER FILM		1
09	1134-5147-01	BUSHING		1
10	9326-2900-06	MAGNET		1
11	1100-3132-04	PLATE NUT		1
12	9334-2610-11	REED SWITCH SUB TONER EM (S4)		1
13	1134-5127-01	COLLAR		1
14	1139-5249-01	SHOULDER SCREW		1
15	1139-5250-01	PLATE SPRING		1
16	1134-5118-01	REGULATING PLATE		1
17	4002-5003-02	REGULATING PLATE	RP	1
18	4002-5012-01	GEAR		1
19	4002-5015-01	GEAR		1
20	1134-5114-01	GEAR 16/29T		1
21	4002-5007-01	BUSHING		1
22	1032-1606-02	BUSHING		1
23	4002-5014-01	GEAR		1
24	4002-5013-02	GEAR		1
25	4002-5011-01	GEAR		1
26	1200-1442-04	WASHER		1
27	4002-5034-01	TERMINAL		1
28	4002-5010-01	GEAR		1

INDEX	PART NO.	PART NAME	REC	QTY
29	1134-5105-01	ROLL		1
30	1134-5106-13	BUSHING		1
31	1200-1462-02	WASHER		1
32	1134-5107-01	BUSHING		1
33	1134-5502-01	SEAL		1
34	1134-5125-14	POLYESTER FILM		1
35	1400-1226-03	PRESSURE SPRING		2
36	1134-5131-01	SPONGE		1
37	1134-5155-01	SPONGE		1
38	4002-5001-02	DEVELOPING ROLLER		1
39	1134-5501-01	SEAL		1
40	1134-5128-14	POLYESTER FILM		1
41	1136-5526-01	RATCHET		1
42	9321-2910-71	SOLENOID SEP FINGER (SL4)		1
43	1100-1342-08	SHOULDER SCREW		2
44	1100-3130-08	PLATE NUT		5
45	1134-5112-01	GEAR 15T		1
46	1300-3131-03	GEAR 24T		1
47	9312-1910-11	MOTOR SUB REPLEW (M14)		1
48	1136-6052-12	ATDC UNIT ATDC (UN2)	RP	1
49	1200-1411-01	WASHER		2
50	4002-5006-01	BUSHING		1
51	1134-5103-23	HOLDER		1
52	1134-5104-01	ROLL		1
53	4002-5005-01	SET PLATE		1
54	1065-5106-01	BUSHING		2
55	4002-5022-01	SEAL		1

INDEX	PART NO.	PART NAME	REC	QTY	SFIX

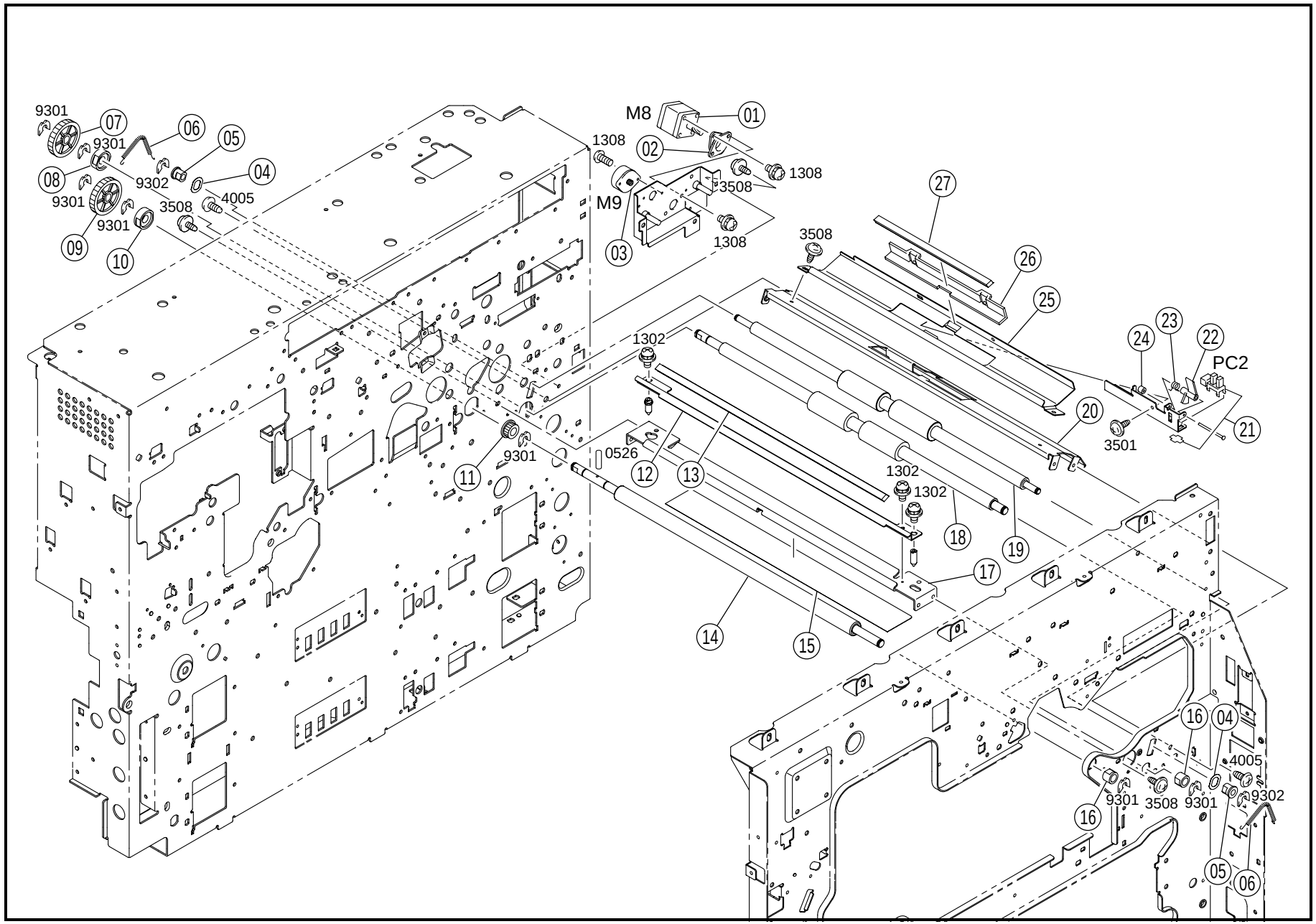
9301
07
9301
06
05
08
04
9302
4005
9301
3508
9301
09
10
M8
01
1308
02
1308
3508
M9
03
1308
3508
27
26
25
24
23
22
PC2
20
21
3501
1302
0526
12
13
9301
11
1302
1302
18
19
17
14
15
16
04
4005
9301
3508
9301
9302
16
05
06

INDEX	PART NO.	PART NAME	REC	QTY
01	9314-1000-61	MOTOR TRANSPORAT (M8)		1
02	1156-1371-01	RETAINING RING		1
03	9314-1000-72	MOTOR SYNCHRONIZI (M9)		1
04	1274-3605-01	POLYESTER FILM		2
05	1070-3076-01	BUSHING		2
06	4002-3523-01	TENSION SPRING		2
07	4002-3530-01	GEAR		1
08	1052-4461-01	BUSHING		1
09	4002-3529-01	GEAR		1
10	1052-4461-01	BUSHING		1
11	1136-3525-01	GEAR 15T		1
12	4002-3508-01	BRACKET		1
13	1074-3316-01	SPONGE	RP	1
14	4002-3524-01	ROLLER		1
15	1136-3578-02	GUIDE		1
16	1200-3134-16	BUSHING		2
17	4002-3506-02	GUIDE PLATE		1
18	4002-3503-01	ROLLER		1
19	4002-3504-01	ROLLER		1
20	4002-3501-02	GUIDE PLATE		1
21	4002-0902-01	PHOTO INTERRUPTER TRANSPORAT (PC2)		1
22	4002-3518-01	ACTUATOR		1
23	4002-3519-01	TORSION SPRING		1
24	1200-2105-06	RETAINING RING		1
25	4002-3502-02	GUIDE PLATE		1
26	4002-3507-02	BRACKET		1
27	1156-3543-01	CLEANING PAD		1

INDEX	PART NO.	PART NAME	REC	QTY	SFIX

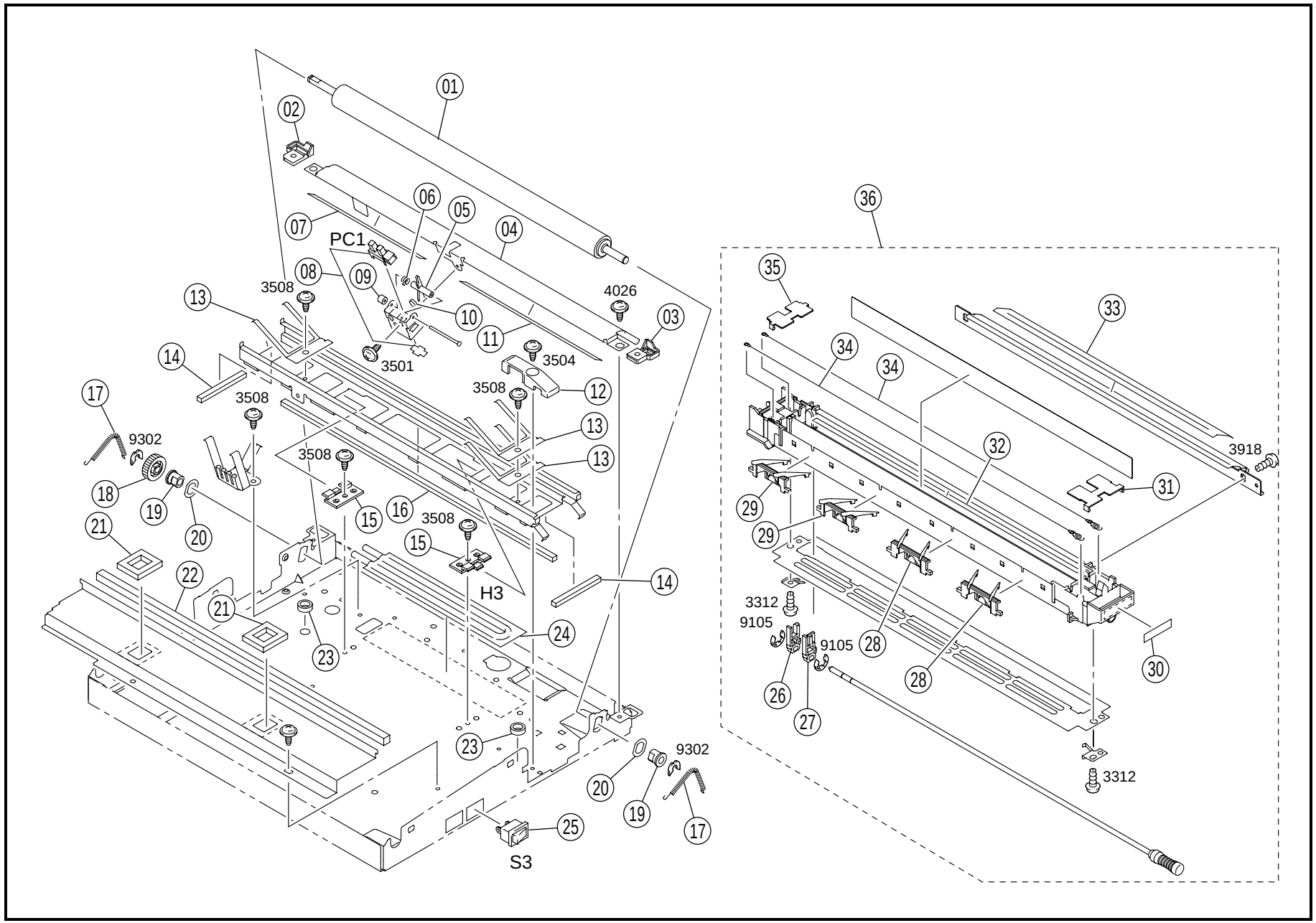
01
02
03
04
05
06
07
08
09
10
11
12
13
14
15
16
17
18
19
20
21
22
23
24
25
PC1
3501
3504
4026
3508
9302
H3
S3
36
35
34
33
32
31
29
28
27
26
30
3312
9105
3918

INDEX	PART NO.	PART NAME	REC	QTY
01	1136-3524-01	ROLLER		1
02	1136-3540-01	SPACER		1
03	1136-3539-01	SPACER		1
04	4002-3505-01	GUIDE PLATE		1
05	1139-3127-01	ACTUATOR		1
06	1139-3131-01	TORSION SPRING		1
07	4002-3525-01	GUIDE		1
08	4002-0902-01	PHOTO INTERRUPTER SYNCHRONIZ (PC1)		1
09	1200-2105-06	RETAINING RING		1
10	1139-3147-01	SPONGE		1
11	4002-3526-01	GUIDE		1
12	1136-4027-01	GUIDE		1
13	1136-4009-01	PLATE SPRING		3
14	1136-4034-01	SPONGE		2
15	1136-4010-01	SPACER		2
16	1136-4012-02	SPONGE		1
17	1136-3527-01	TENSION SPRING		2
18	1136-3526-01	GEAR 20T		1
19	1070-3076-01	BUSHING		2
20	1274-3605-01	POLYESTER FILM		2
21	1136-4019-01	SPONGE		2
22	1136-4020-01	SPONGE		1
23	1136-4031-01	SPONGE		2
24	9352-6310-31	HEATER OPTION (H3)		1
25	9332-5910-41	SEESAW-SWITCH PAPER DEHUM (S3)		1
26	1139-4058-02	CLEANING PAD		1
27	1139-4059-01	CLEANING PAD		1
28	4002-4103-01	GUIDE		2
29	4002-4102-01	GUIDE		2
30	1129-7303-01	LABEL		1
31	1036-4503-01	COVER		1
32	1052-5501-02	POLYESTER FILM		1
33	4002-4105-02	SEAL		1
34	1075-0765-01	CORONA WIRE	RP	2
35	1036-4504-01	COVER		1
36	4002-0319-02	TRANS CORONA UNIT		1

INDEX	PART NO.	PART NAME	REC	QTY	SFIX

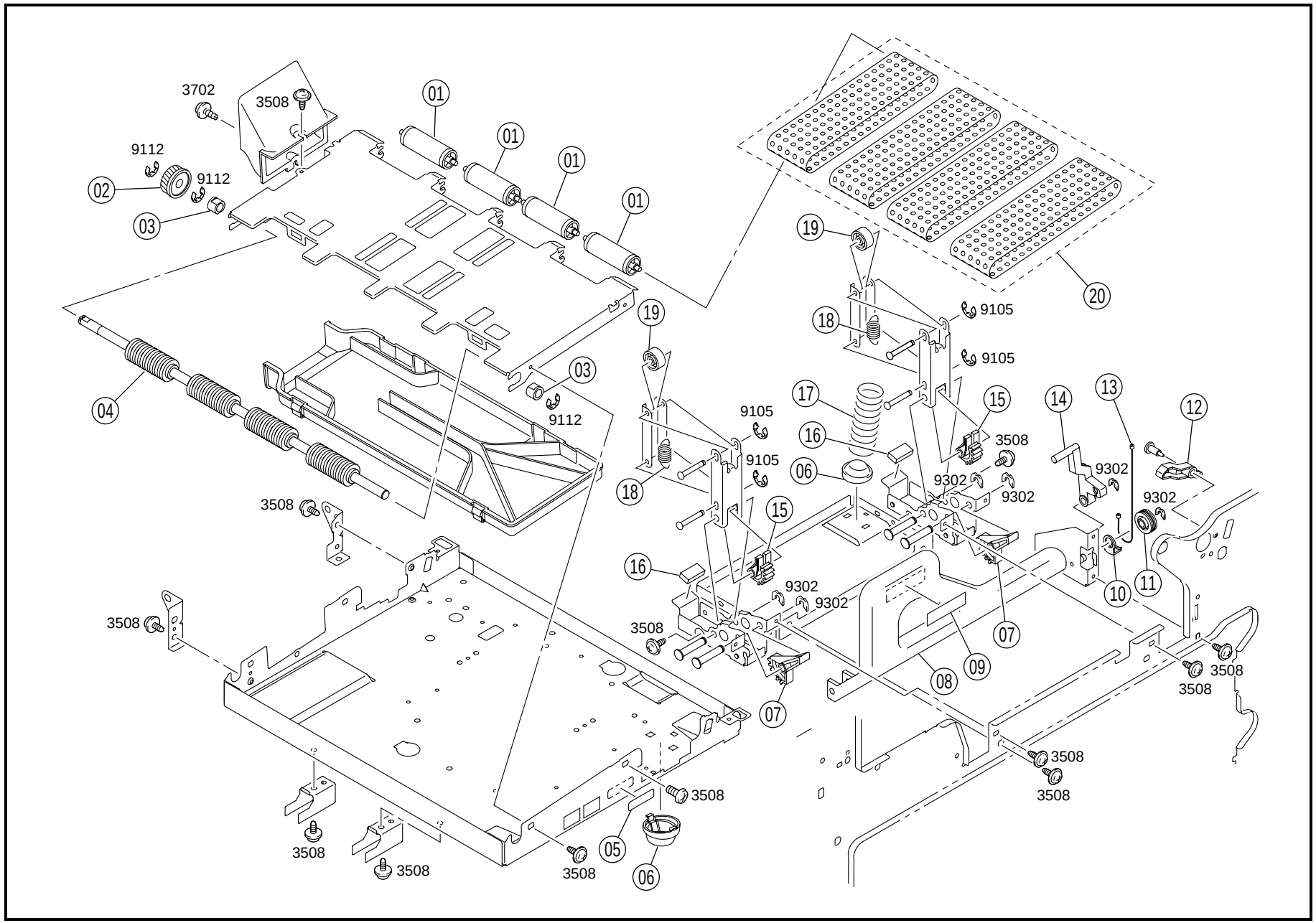
3702
3508
01
01
01
01
9112
9112
02
03
19
20
18
9105
9105
19
03
04
9112
17
15
14
13
12
9105
16
3508
9105
06
9302
9302
9302
9302
18
15
3508
16
9302
9302
10
11
3508
3508
07
09
08
3508
3508
07
3508
3508
3508
05
06
3508
3508
3508

INDEX	PART NO.	PART NAME	REC	QTY	INDEX	PART NO.	PART NAME	REC	QTY
01	1136-3604-01	ROLL		4	19	1200-2626-03	COLLAR		2
02	4002-3607-01	GEAR		1	20	4002-0901-01	VACUUM BELT	RP	1
03	1079-5530-01	BUSHING		2					
04	4002-3602-01	ROLLER		1					
05	1500-2340-88	LABEL DEHUMIDIFIER		1					
06	1136-3516-01	HOLDER		2					
07	1136-3510-01	SEGMENT GEAR		2					
08	1136-3509-02	LOCK RELEASE LEVER		1					
09	4002-7314-01	LABEL		1					
10	4425-3770-01	SUPPORT		1					
11	4425-3715-01	WIRE PULLEY		1					
12	4002-3515-01	LEVER		1					
13	4002-3521-01	WIRE		1					
14	4002-3514-01	LEVER		1					
15	1136-3508-01	SEGMENT GEAR		2					
16	1136-3514-01	SPONGE		2					
17	1136-3515-01	PRESSURE SPRING		1					
18	1136-3506-01	TENSION SPRING		2					

INDEX	PART NO.	PART NAME	REC	QTY	SFIX

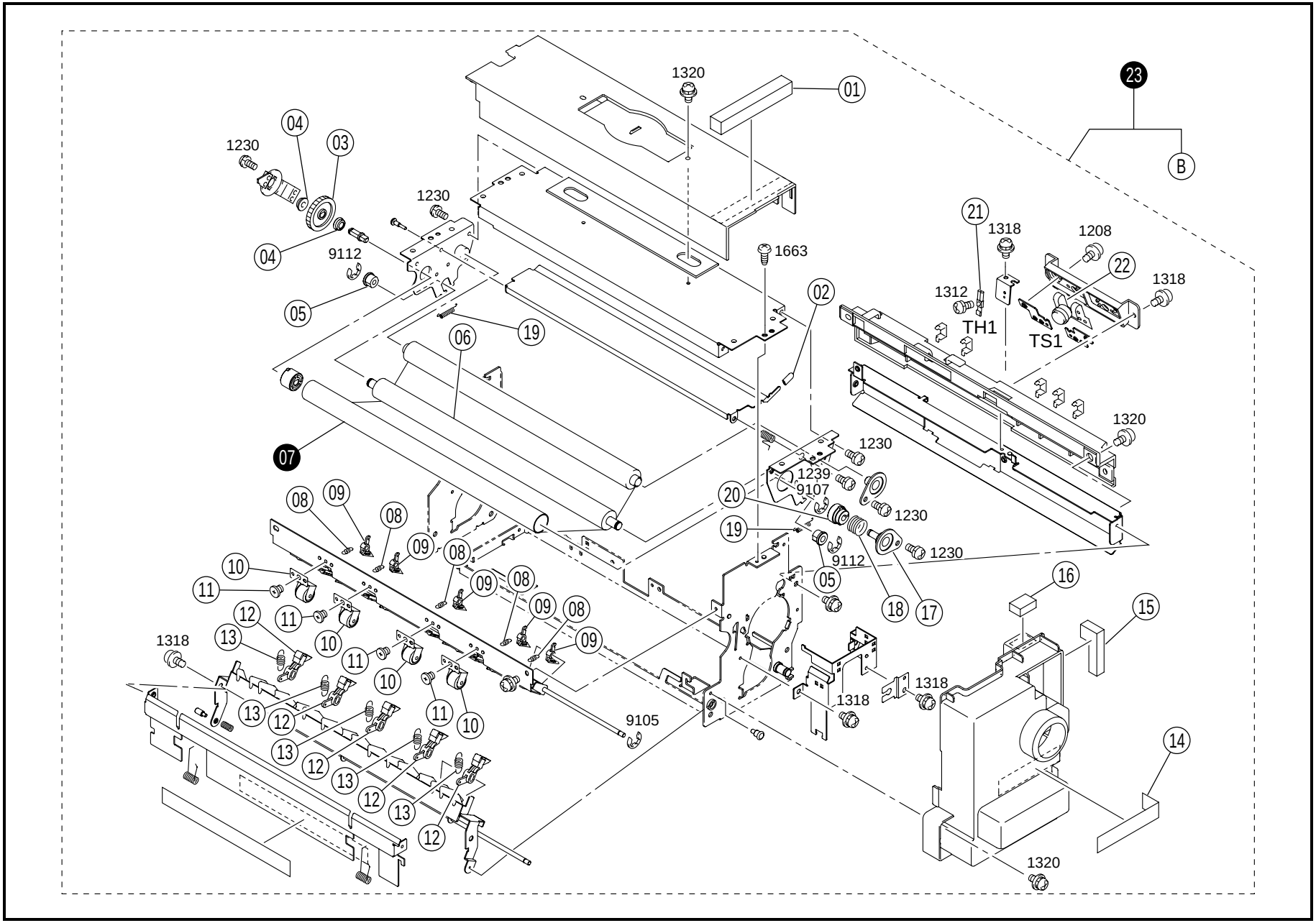
1320
01
23
B
04
03
1230
04
9112
05
1230
1663
02
19
06
07
21
1318
1208
22
1318
1312
TH1
TS1
1320
1230
1239
9107
20
1230
19
1230
9112
05
18
17
16
15
08
09
10
11
12
13
1318
9105
1318
1318
14
1320

INDEX	PART NO.	PART NAME	REC	QTY	INDEX	PART NO.	PART NAME	REC	QTY
01	4002-5799-01	THERMAL INSULATOR		1	20	4002-5739-01	BUSHING		1
02	1076-5905-01	CAP		1	21	9372-2000-51	THERMISTOR UPPER FUSIN (TH1)	RP	1
03	4002-5737-01	GEAR		1	22	9334-1610-11	THERMOSTAT UPPER FUSIN (TS1)	RP	1
04	1075-5754-01	BUSHING		2					
05	1075-5779-01	BUSHING		2					
06	1075-5751-01	ROLLER	RP	1					
08	1400-2230-02	TENSION SPRING		5					
09	4002-5783-01	SEPARATOR	RP	5					
10	4002-0213-13	HOLDER ASSY		4					
11	1074-1026-01	SHOULDER SCREW		4					
12	4002-5790-01	SEPARATOR	RP	5					
13	1074-5778-01	TENSION SPRING		5					
14	4002-7320-01	LABEL		1					
15	4002-5797-01	THERMAL INSULATOR		1					
16	4002-5798-01	THERMAL INSULATOR		1					
17	1031-0207-01	BUSHING		1					
18	4002-5738-01	TORSION SPRING		1					
19	1075-5795-01	TENSION SPRING		2					

INDEX	PART NO.	PART NAME	REC	QTY	SFIX
07	1145-5801-01	WEB ROLLER	RP	1	011
07	4002-5732-01	WEB ROLLER	RP	1	211, 212, 214, 218, 311, 312, 313, 314
23	4002-0321-02	FUSING UNIT		1	011
23	4002-0322-02	FUSING UNIT		1	211, 212, 214, 218
23	4002-0323-02	FUSING UNIT		1	311, 312, 313, 314

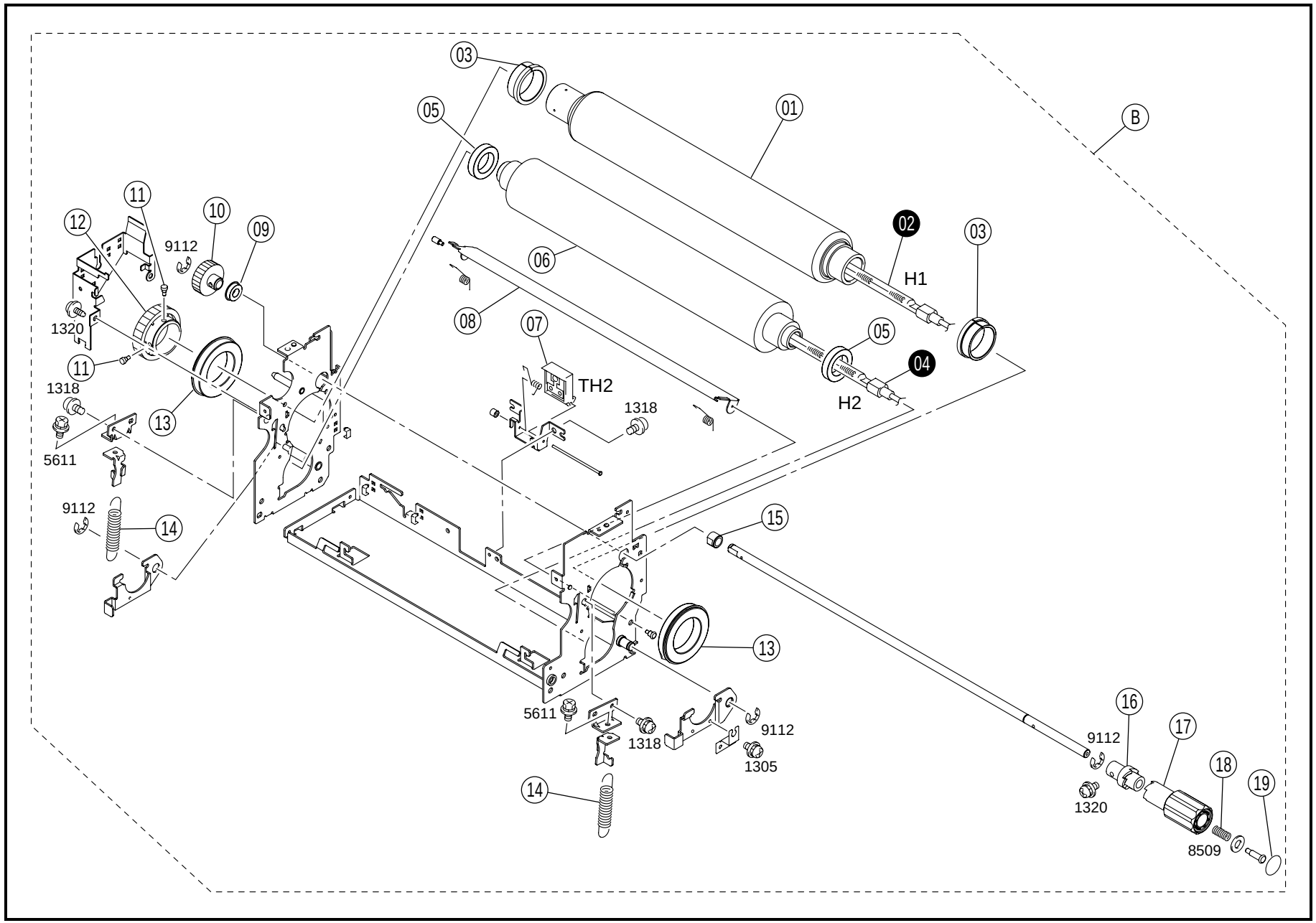
03
05
01
B
11
10
09
12
9112
02
03
06
H1
1320
08
07
05
11
04
1318
TH2
H2
13
1318
5611
9112
14
15
13
5611
1318
9112
1305
16
17
9112
18
19
14
1320
8509

INDEX	PART NO.	PART NAME	REC	QTY	INDEX	PART NO.	PART NAME	REC	QTY
01	4002-5701-01	ROLLER	RP	1					
03	4002-5704-01	BUSHING	RP	2					
05	4002-5706-01	BALL BEARING	RP	2					
06	4002-5702-01	ROLLER	RP	1					
07	9372-2910-31	THERMISTOR LOWER FUSIN (TH2)	RP	1					
08	4002-5754-01	GUIDE		1					
09	4002-5778-01	BALL BEARING		1					
10	4002-5710-02	GEAR		1					
11	1136-5785-02	SHOULDER SCREW		2					
12	4002-5709-02	GEAR	RP	1					
13	4002-5705-01	BALL BEARING	RP	2					
14	1156-5767-01	TENSION SPRING		2					
15	1156-5837-01	BUSHING		1					
16	1156-5828-01	RATCHET		1					
17	1156-5804-01	KNOB		1					
18	1273-3048-01	PRESSURE SPRING		1					
19	1156-7304-02	LABEL M1		1					

INDEX	PART NO.	PART NAME	REC	QTY	SFIX
02	9352-2910-42	HEATER UPPER FUSING (H1)	RP	1	011
02	9352-2910-52	HEATER UPPER FUSING (H1)	RP	1	311, 312, 313, 314
02	9352-2910-62	HEATER UPPER FUSING (H1)	RP	1	211, 212, 214, 218
04	9352-2910-71	HEATER LOWER FUSIN (H2)	RP	1	011
04	9352-2910-81	HEATER LOWER FUSIN (H2)	RP	1	311, 312, 313, 314
04	9352-2910-91	HEATER LOWER FUSIN (H2)	RP	1	211, 212, 214, 218

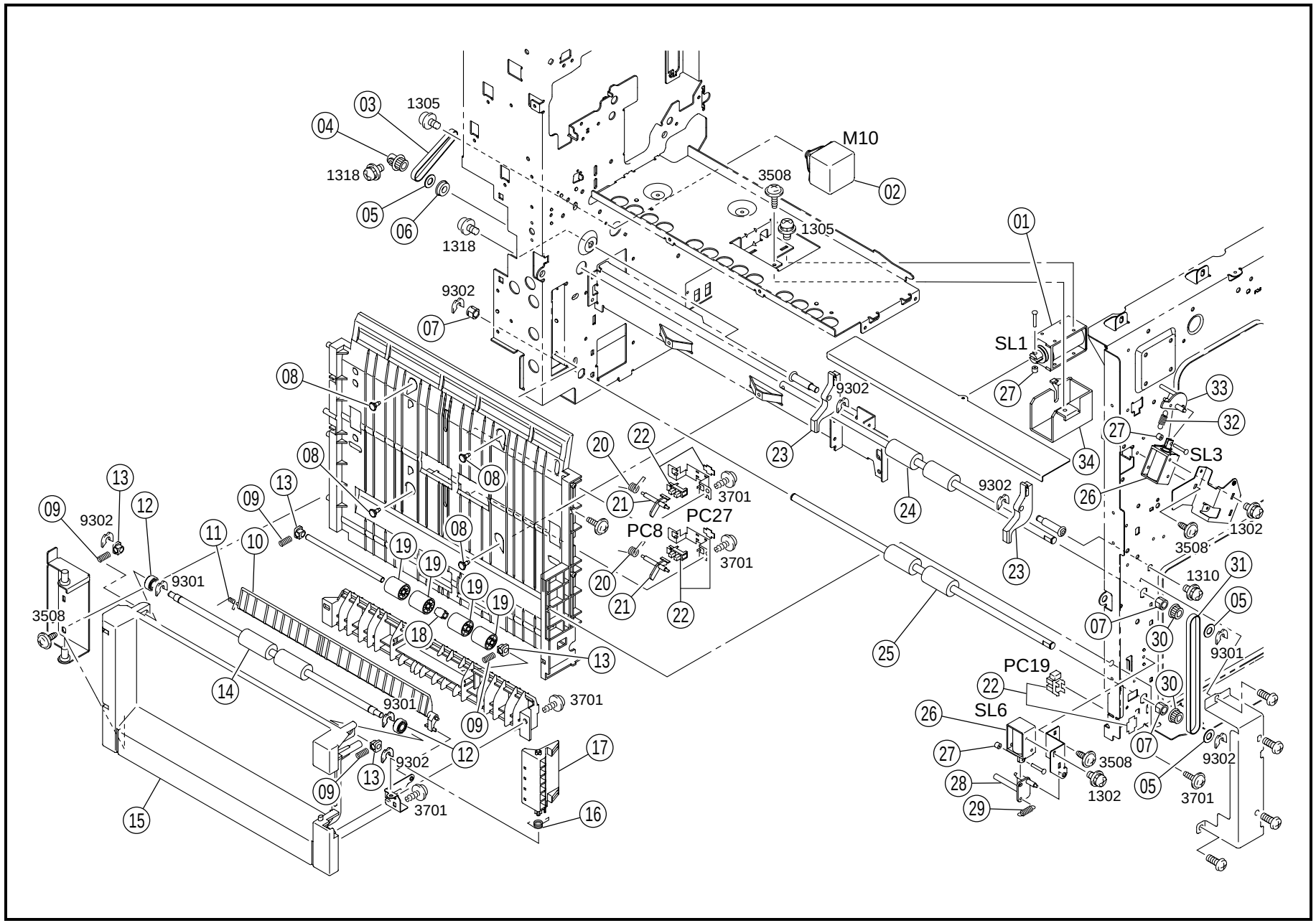
M10
SL1
SL3
SL6
PC8
PC27
PC19
1305
1318
9302
9301
3508
3701
1302
1310

INDEX	PART NO.	PART NAME	REC	QTY
01	9321-2910-81	SOLENOID TURNOVER (SL1)		1
02	9314-1911-11	MOTOR TURNOVER (M10)		1
03	4002-3753-01	TIMING BELT		1
04	1155-3845-01	PULLEY 22T		1
05	1200-1566-04	WASHER		3
06	4102-3149-01	BALL BEARING		1
07	1079-5530-01	BUSHING		3
08	4426-3138-01	SHOULDER SCREW		4
09	4002-3705-01	PRESSURE SPRING		4
10	4002-3742-01	GUIDE		1
11	4002-3743-01	TORSION SPRING		1
12	1155-3816-01	ROLL		2
13	4002-3704-01	BUSHING		4
14	4002-3744-01	ROLLER		1
15	4002-3737-01	DOOR		1
16	4002-3739-01	TORSION SPRING		1
17	4002-3741-01	HANDLE		1
18	1149-3479-01	COLLAR		1
19	4425-3103-12	ROLL		4
20	4002-3715-01	TORSION SPRING		2
21	4002-3760-01	ACTUATOR		2
22	4002-0902-01	PHOTO INTERRUPTER (PC8.19.27)		3
23	4002-3755-01	LEVER		2
24	4002-3747-01	ROLLER		1
25	4002-3748-01	ROLLER		1
26	9321-2621-11	SOLENOID (SL3.6)		1
27	1200-2105-02	COLLAR		3
28	4002-3752-01	ACTUATOR		1
29	4002-3750-01	TENSION SPRING		1
30	1075-2579-01	PULLEY 22T		2
31	4002-3754-01	TIMING BELT		1
32	4002-3731-01	TENSION SPRING		1
33	4002-3732-01	ACTUATOR		1
34	4002-1017-01	COVER		1

INDEX	PART NO.	PART NAME	REC	QTY	SFIX

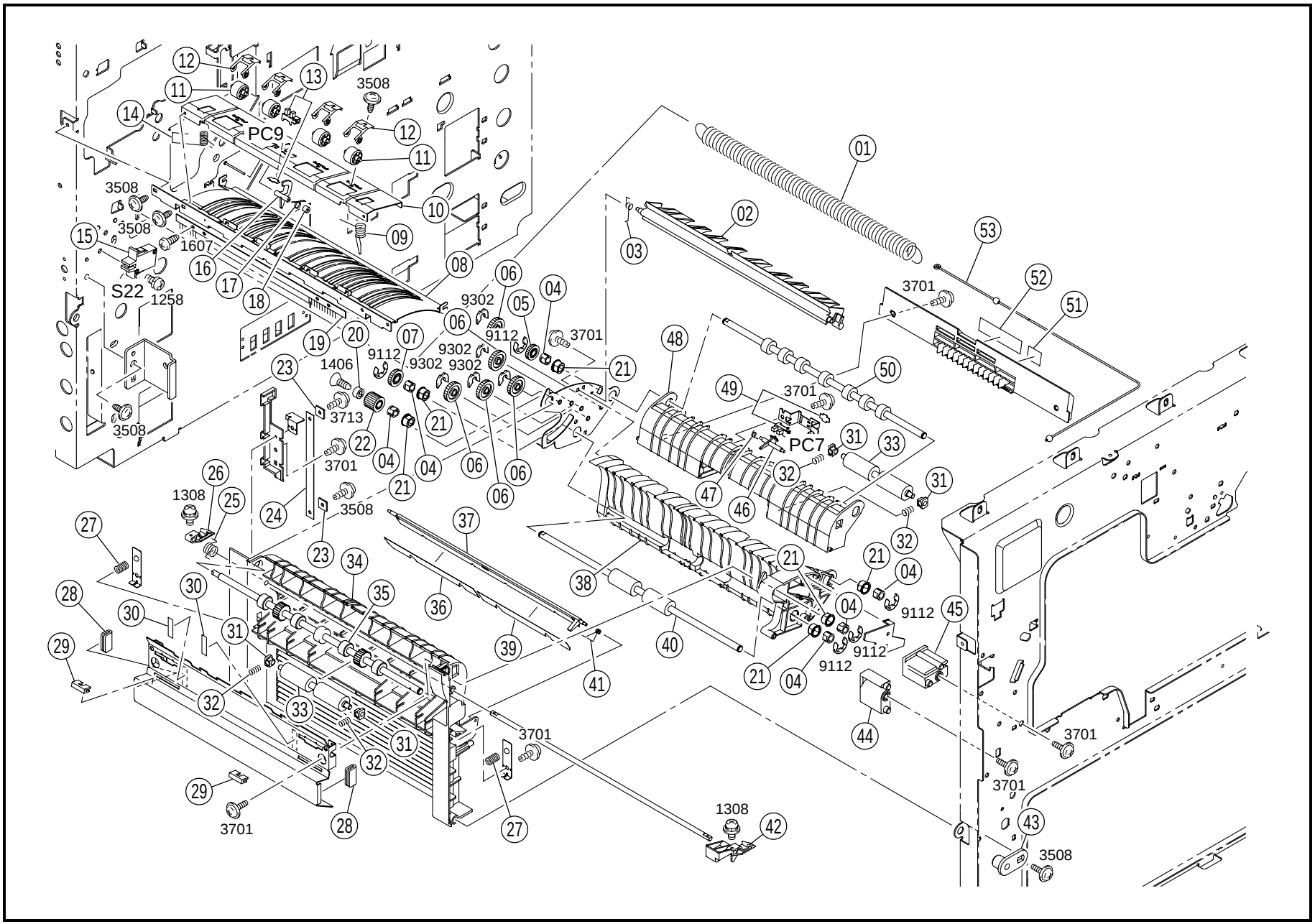
PC9
PC7
S22
3508
1607
1258
9302
9112
3701
1406
3713
1308
01
02
03
04
05
06
07
08
09
10
11
12
13
14
15
16
17
18
19
20
21
22
23
24
25
26
27
28
29
30
31
32
33
34
35
36
37
38
39
40
41
42
43
44
45
46
47
48
49
50
51
52
53

INDEX	PART NO.	PART NAME	REC	QTY
01	4002-3770-01	TENSION SPRING		1
02	4002-3721-01	GUIDE		1
03	4002-3722-01	TORSION SPRING		1
04	1079-5530-01	BUSHING		6
05	4002-3728-01	GEAR		1
06	4002-3729-01	GEAR		5
07	4002-3727-01	GEAR		1
08	4002-3733-01	GUIDE PLATE		1
09	4002-3765-01	TORSION SPRING		1
10	4002-3734-01	BRACKET		1
11	1033-4709-01	ROLL		4
12	1075-5749-03	HOLDER		4
13	4002-0903-01	PHOTO INTERRUPTER PAPER EXIT (PC9)		1
14	4002-3766-01	TORSION SPRING		1
15	9332-3610-13	MICROSWITCH UPR LEFT DO (S22)		1
16	4002-3735-02	ACTUATOR		1
17	4002-3746-01	TORSION SPRING		1
18	1200-2105-06	RETAINING RING		1
19	0961-5445-02	NEUTRALIZING BRUSH		1
20	4002-3763-01	COLLAR		1
21	4002-3771-01	SLEEVE		6
22	4002-3726-01	GEAR		1
23	1053-3103-01	PLATE		2
24	1054-5101-02	BAND		1
25	4002-3710-01	TORSION SPRING		1
26	4102-3133-02	LEVER		1
27	4002-3759-01	PRESSURE SPRING		2
28	4002-3776-01	SPACER		2
29	1156-3710-01	RUBBER STRIP		2
30	1136-3239-01	SPONGE		2
31	4002-3704-01	BUSHING		4
32	4002-3705-01	PRESSURE SPRING		4
33	4002-3703-01	ROLLER		2
34	4002-3701-01	DOOR		1
35	4002-3723-02	ROLLER		1
36	4640-3831-01	GUIDE		1
37	4002-3774-01	GUIDE		1
38	4002-3716-01	GUIDE		1
39	4640-3832-01	GUIDE		1
40	4002-3724-01	ROLLER		1
41	4002-3707-01	TORSION SPRING		1
42	4002-3708-01	HANDLE		1
43	4002-3712-01	HOLD PLATE		1
44	4002-3767-01	GUIDE		1
45	4002-3768-01	GUIDE		1
46	4002-3713-01	ACTUATOR		1
47	4002-3715-01	TORSION SPRING		1
48	4002-3717-01	GUIDE		1
49	4002-0902-01	PHOTO INTERRUPTER TURNOVER F (PC7)		1
50	4002-3725-01	ROLLER		1
51	4002-7313-01	LABEL		1
52	4002-7318-01	LABEL		1
53	4002-3769-01	WIRE		1

INDEX	PART NO.	PART NAME	REC	QTY	SFIX

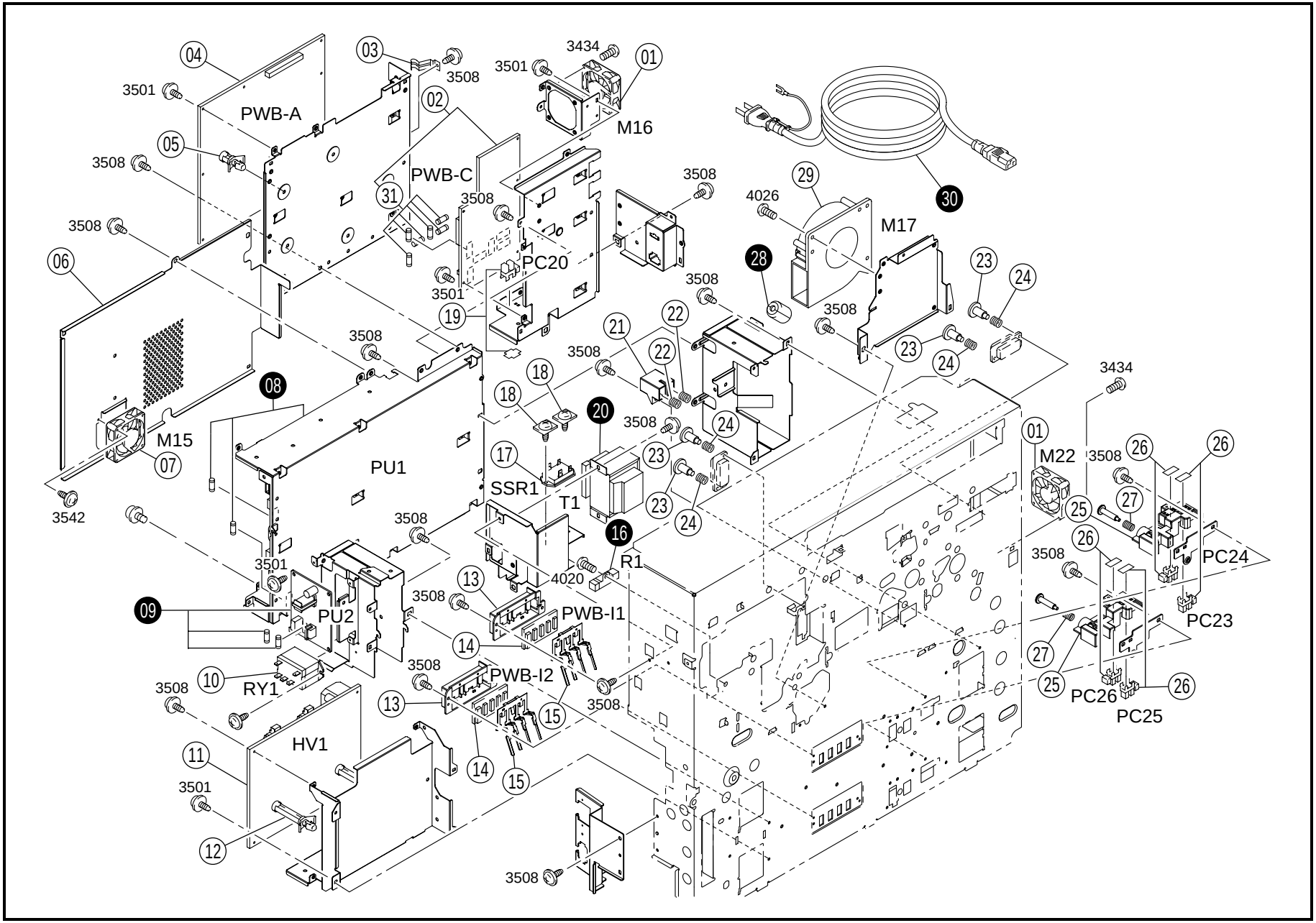
PWB-A
PWB-C
PC20
M16
M17
M15
M22
PU1
PU2
SSR1
T1
R1
PWB-I1
PWB-I2
RY1
HV1
PC24
PC23
PC26
PC25
3501
3508
3434
4026
4020
3542

INDEX	PART NO.	PART NAME	REC	QTY
01	9313-1910-31	FAN MOTOR COOLING (M16.22)		2
02	4002-0103-02	PWB ASSY POWER SU (PWB-C)	RP	1
03	4002-2426-01	EARTH GROUND		1
04	4002-0104-03	PWB ASSY MASTER (PWB-A)	RP	1
05	9384-1920-11	PWB SUPPORT		5
06	4002-2408-01	COVER		1
07	9313-1911-31	FAN MOTOR COOLING FAN (M15)		1
10	9341-2810-11	RELAY MAIN RELAY (RY1)		1
11	4002-6204-02	HV TRANSFORMER HIGH VOLTAG (HV1)		1
12	9384-1621-81	PWB SUPPORT 22.2H		2
13	1164-3022-02	HOLDER		2
14	1164-0105-01	PW BOARD-I SIZE (PWB-I1.I2)		2
15	1164-3020-03	LEVER		2
17	9343-4210-21	TRIAC MODULE OPTION (SSR1)		1
18	1139-2338-01	TAPPING SCREW OPTION		2
19	4002-0902-01	PHOTO INTERRUPTER PRE-DRIVE O (PC20)		1
21	1136-4007-01	HOLDER		1
22	1400-1122-10	PRESSURE SPRING		2

INDEX	PART NO.	PART NAME	REC	QTY
23	1100-1335-03	SHOULDER SCREW		4
24	1400-1134-02	PRESSURE SPRING		4
25	4002-3111-01	HOLDER		2
26	4122-0901-01	PHOTO INTERRUPTER (PC23-26)		4
27	4002-3110-01	PRESSURE SPRING		2
29	9313-1310-61	FAN MOTOR SUCTION FAN (M17)		1
31	9346-3910-41	FUSE	RP	6

INDEX	PART NO.	PART NAME	REC	QTY	SFIX
08	4002-6201-02	POWER SUPPLY PW SUPPLY M (PU1)		1	011, 311, 312, 313
08	4002-6201-02	POWER SUPPLY PW SUPPLY M (PU1)		1	314
08	4002-6202-02	POWER SUPPLY PW SUPPLY M (PU1)		1	211, 212, 214, 218
09	1177-6203-03	PWB-PU PW SUPPLY S (PU2)		1	011, 311, 312, 313, 314
09	1177-6204-03	PWB-PU PW SUPPLY S (PU2)		1	211, 212, 214, 218
16	9459-1807-01	RESISTOR FLICKERLESS (R1)		1	211, 212, 214, 218
20	9324-1810-11	TRANSFORMER DEHUM HEATER (T1)		1	011
20	9324-1810-21	TRANSFORMER OPTION (T1)		1	311, 312, 313, 314
20	9324-1810-31	TRANSFORMER OPTION (T1)		1	211, 212, 214, 218
28	9326-1910-21	FERRITE CORE		1	211, 212, 214, 218, 313
30	9381-4810-31	POWER CORD		1	011
30	9381-4810-61	POWER CORD		1	212, 214
30	9381-4911-01	POWER CORD		1	311, 312, 313, 314
30	9381-4911-21	POWER CORD		1	218

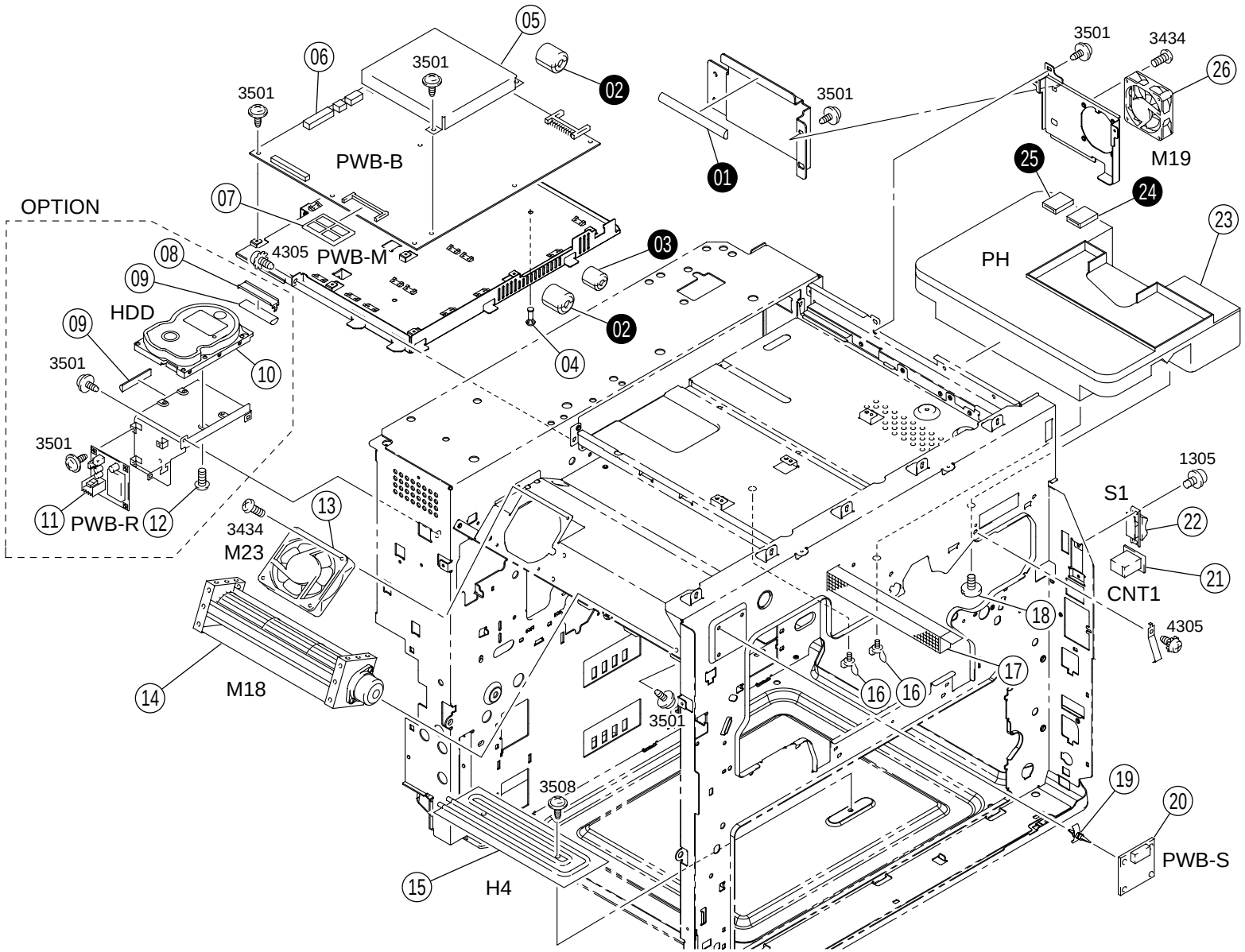
05
06
3501
3501
02
PWB-B
01
3501
3501
3434
26
M19
25
24
23
PH
OPTION
07
4305
PWB-M
03
08
09
HDD
09
02
04
10
3501
3501
11
PWB-R
12
13
3434
M23
1305
S1
22
21
CNT1
18
4305
17
16
16
14
M18
3501
3508
19
20
PWB-S
15
H4

INDEX	PART NO.	PART NAME	REC	QTY
04	9384-1910-61	PWB SUPPORT		6
05	4002-2444-01	EARTH GROUND		1
06	4002-0102-15	PWB ASSY IMAGE (PWB-B)	RP	1
07	4002-0120-02	PWB ASSY OPTION (PWB-M)	RP	1
08	4002-2441-01	HOLDER OPTION		1
09	4002-6210-01	MAGNETIC MEMBER OPTION		2
10	4002-6059-01	HARD DISK DRIVE OPTION (HDD)		1
11	1155-0125-02	PW BOARD-R OPTION (PWB-R)	RP	1
12	1155-2447-02	SCREW OPTION		4
13	9313-1911-41	FAN MOTOR COOLING FAN (M23)		1
14	9313-1310-92	FAN MOTOR VENT FAN (M18)		1
15	9352-6310-11	HEATER OPTION (H4)		1
16	4002-2020-01	SCREW		2
17	4002-4004-02	FILTER	RP	1
18	4002-1953-01	SCREW		1
19	9384-1900-57	PWB SUPPORT 9.53H		4
20	1155-0117-01	PW BOARD-S TECH.REP. (PWB-S)		1
21	9323-1910-11	COUNTER TOTAL (CNT1)		1

INDEX	PART NO.	PART NAME	REC	QTY
22	9332-5310-31	SWITCH POWER (S1)		1
23	4002-0531-02	PRINT HEAD UNIT (PH)		1
26	9313-1910-31	FAN MOTOR COOLING FAN (M19)		1

INDEX	PART NO.	PART NAME	REC	QTY	SFIX
01	4002-6209-01	MAGNETIC MEMBER		1	211, 212, 214, 218, 313
02	9326-1000-61	FERRITE CORE		2	211, 212, 214, 218, 313
03	9326-1910-21	FERRITE CORE		1	211, 212, 214, 218, 313
24	9326-1000-71	FERRITE CORE		1	211, 212, 214, 218, 313
25	9326-1000-51	FERRITE CORE		1	211, 212, 214, 218, 313

2 UNITS

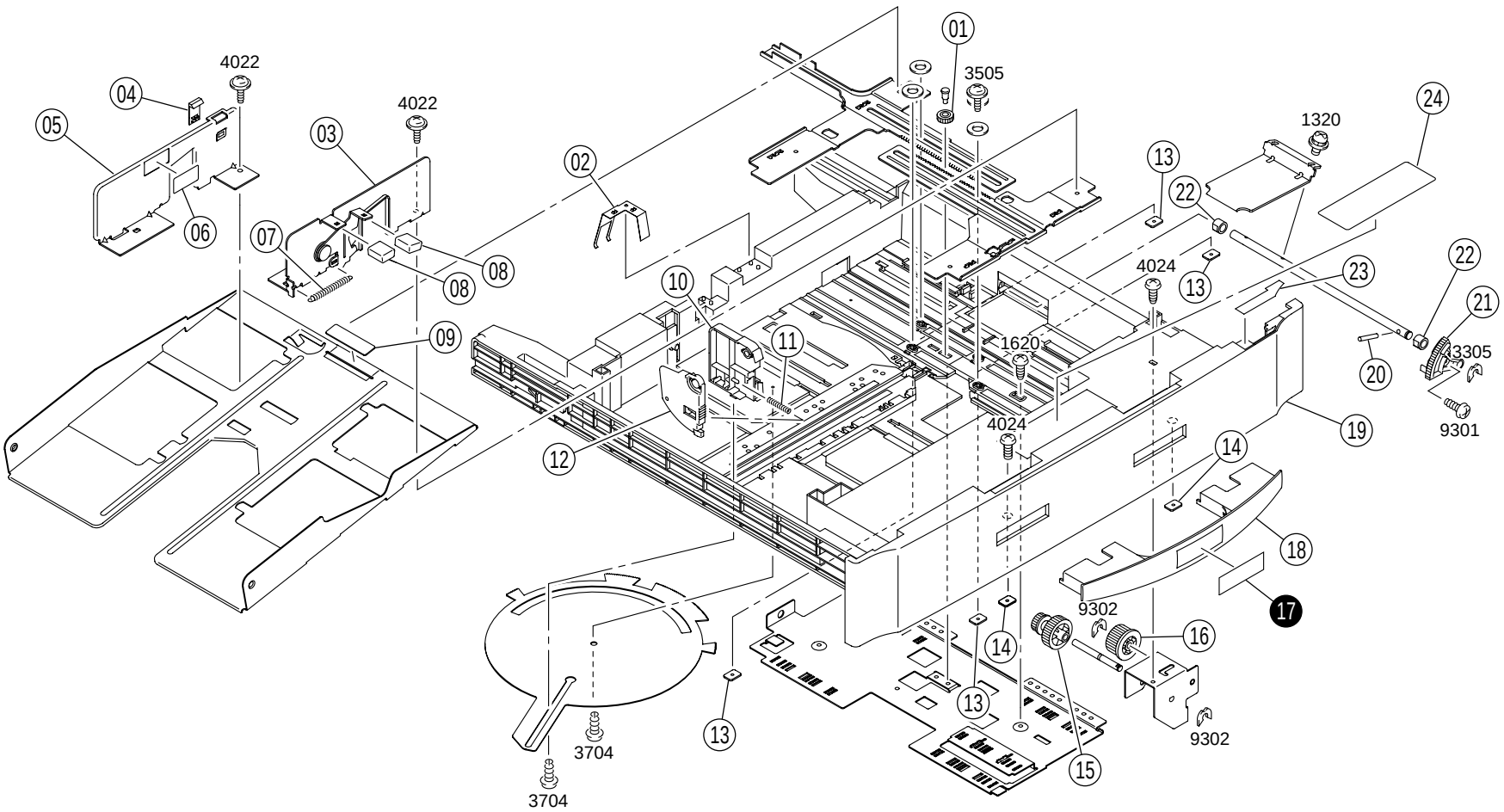
01
3505
02
03
4022
04
05
06
07
08
09
10
11
12
13
14
15
16
17
18
19
20
21
22
23
24
1320
4024
1620
3305
9301
9302
3704

INDEX	PART NO.	PART NAME	REC	QTY	INDEX	PART NO.	PART NAME	REC	QTY
01	4498-3827-01	GEAR 14T		2	20	4425-3213-01	PIN		2
02	4002-3118-01	PLATE SPRING		2	21	4425-3203-05	SEGMENT GEAR		2
03	4002-0221-01	BRACKET ASSY		2	22	1200-3134-16	BUSHING		4
04	4002-3130-02	HOLDER		2	23	4002-3136-02	SEAL		2
05	4002-3103-01	REGULATING PLATE		2	24	4002-7307-01	LABEL		2
06	4002-7306-01	LABEL		2					
07	4002-3115-01	TENSION SPRING		2					
08	1161-3120-02	KNOB		4					
09	4425-3257-01	CORK		2					
10	4002-3119-01	REGULATING PLATE		2					
11	1149-3406-01	PRESSURE SPRING		2					
12	4002-3120-01	LEVER		2					
13	4002-3113-01	PLATE NUT		8					
14	1139-3153-01	PLATE NUT		4					
15	4425-3216-02	GEAR		2					
16	4425-3217-01	GEAR		2					
18	4002-3121-03	HANDLE		2					
19	4002-3101-04	CASSETTE		2					

INDEX	PART NO.	PART NAME	REC	QTY	SFIX
17	4002-7308-01	LABEL		2	211, 212, 214, 218, 311, 312, 313, 314
17	4002-7319-01	LABEL		2	011

01 - 03 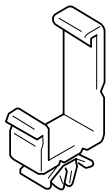	12 , 13 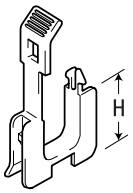	19 , 20 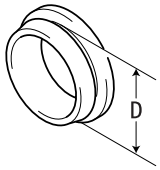	25 	30 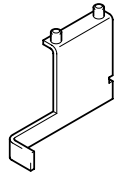			
04 , 05 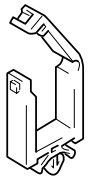	14 , 15 	21 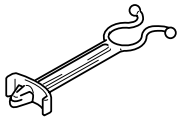	26 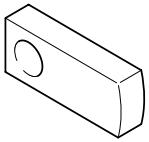	31 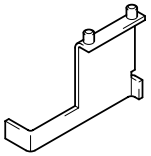			
06 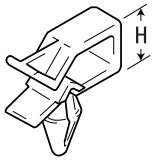	16 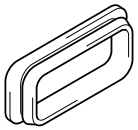	22 	27 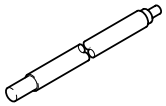	32 			
07 - 10 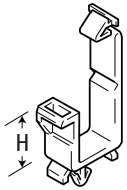	17 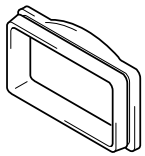	23 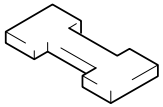	28 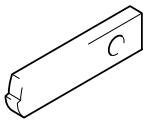	33 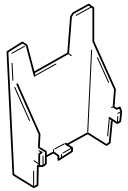			
11 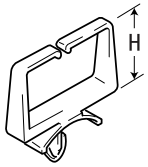	18 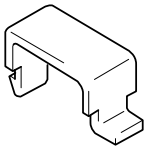	24 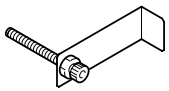	29 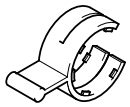	34 , 35 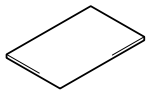			

INDEX	PART NO.	PART NAME	REC	QTY
01	9384-1310-91	WIRING SADDLE 18.5H		33
02	9384-1311-01	WIRING SADDLE 27H		33
03	9384-1311-21	WIRING SADDLE 16.8H		5
04	9384-1110-61	WIRING SADDLE 21.5H		3
05	9384-1310-11	WIRING SADDLE 5.2H		58
06	9384-1820-31	WIRING SADDLE 8.0H		3
07	9384-1921-01	WIRING SADDLE 14.4H		3
08	9384-1921-11	WIRING SADDLE 9.2H		4
09	9384-1921-21	WIRING SADDLE 15.2H		2
10	9384-1921-31	WIRING SADDLE 17.3H		13
11	9384-1310-81	WIRING SADDLE 6.4H		31
12	9384-2010-31	EDGE COVER 15.4H		14
13	9384-2010-41	EDGE COVER 25.0H		6
14	9384-2610-11	EDGE COVER 8.5H		3
15	9384-2010-21	EDGE COVER 8.5H		14
16	1050-4805-01	EDGE COVER		3
17	1038-4006-01	INSULATING MEMBER		1
18	0990-5596-01	CORD CLAMP		8
19	0721-4203-12	COLLAR 17D		2
20	0722-4913-01	COLLAR 20D		4
21	9384-1911-11	SO CLIP		8
22	9384-1311-11	CABLE TIE 104L		3
23	1067-7901-01	JIG SAFETY SWITCH	RP	1
24	1136-0756-01	JIG INTERLOCK	RP	1
25	1136-7904-01	JIG D.S. COLLAR	RP	1
26	1136-7905-01	JIG D.S. FINGER	RP	2
27	1136-7906-01	JIG D.S. SHAFT	RP	1
28	4002-7901-01	JIG	RP	1
29	4002-7903-01	JIG	RP	1
30	4002-7904-01	JIG	RP	1
31	4002-7905-01	JIG	RP	1
32	4002-7902-01	JIG	RP	1
33	1156-7501-01	HOLDER		1
34	4003-0751-01	JIG MEMORY CARD	RP	1
35	4002-0753-01	JIG MEMORY CARD		1

INDEX	PART NO.	PART NAME	REC	QTY	SFIX

INDEX	PART NO.	PART NAME	ILLUST
0203 0210	9754-2010-08 9754-3012-08	SPRING ROLL PIN	
0502 0509 0510	9752-3012-50 9752-2012-50 9752-3014-50	PIN	
1208 1210 1212 1230 1239 1258	9644-0306-13 9644-0308-13 9644-0310-13 9644-0408-13 9644-0420-13 9644-0318-13	SCREW	
1302 1305 1308 1309 1312 1318 1320 1321 1344 1353	9646-0305-13 9646-0306-13 9646-0308-13 9646-0310-13 9646-0316-13 9646-0408-13 9646-0410-13 9646-0412-13 9646-0306-50 9646-0330-13	SCREW	
1406 1452	9648-0308-01 9648-0308-20	SCREW	
1603 1607 1608 1620 1623 1634 1647 1655 1663	9654-0306-01 9654-0306-13 9654-0308-01 9654-0406-01 9654-0408-01 9654-0304-13 9654-0305-01 9654-0304-01 9654-0406-13	SCREW	

INDEX	PART NO.	PART NAME	ILLUST
1905	9612-1640-07	SCREW	
3303 3305 3312 3314	9732-0306-13 9732-0308-13 9732-0410-13 9732-0312-13	TAPPING SCREW	
3402 3403 3408 3410 3434	9733-0306-13 9733-0308-13 9733-0406-13 9733-0408-13 9733-0430-13	TAPPING SCREW	
3501 3504 3505 3508 3511 3542	9735-0306-13 9735-0308-13 9735-0310-13 9735-0408-13 9735-0414-13 9735-0320-13	TAPPING SCREW	
3701 3702 3704 3705 3709 3713	9739-0408-13 9739-0410-13 9739-0308-13 9739-0306-13 9739-0310-13 9739-0410-07	TAPPING SCREW	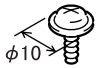
3907 3918 3920	9742-0308-13 9742-0408-13 9742-0408-14	TAPPING SCREW	
4005 4012 4020 4022 4024 4026 4027	9743-0408-13 9743-0306-13 9743-0408-14 9743-0406-13 9743-0410-14 9743-0410-13 9743-0406-14	TAPPING SCREW	

INDEX	PART NO.	PART NAME	ILLUST
4305	9770-0408-13	TAPPING SCREW	
5109	9670-0410-08	BOLT	
5611	9736-0420-13	BOLT	
7102 7104 7107	9684-0304-08 9684-0308-08 9684-0406-08	SET SCREW	
8107	9710-0400-13	SPRING WASHER	
8302	9712-0400-13	WASHER	
8506 8509	9716-0400-01 9716-0500-01	WASHER	
9105 9107 9112	9721-0300-01 9721-0400-01 9721-0600-01	RETAINING RING	
9301 9302 9303	1066-1151-01 4425-3001-01 4425-3002-01	RETAINING RING	

PART NO.	FIG.	INDEX	QTY		PART NO.	FIG.	INDEX	QTY		PART NO.	FIG.	INDEX	QTY		PART NO.	FIG.	INDEX	QTY	
0721-4203-12	25	19	2		1134-5115-01	14	04	2		1136-5515-01	13	12	1		1156-1371-01	15	02	1	
0722-4913-01	25	20	4		1134-5118-01	14	16	1		1136-5516-03	13	36	1		1156-3543-01	15	27	1	
0818-7319-01	02	12	1		1134-5125-14	14	34	1		1136-5517-01	13	17	1		1156-3710-01	21	29	2	
0961-5445-02	21	19	1		1134-5127-01	14	13	1		1136-5520-01	13	31	1		1156-4002-01	13	46	1	
0990-5596-01	25	18	8		1134-5128-14	14	40	1		1136-5521-01	13	34	1		1156-4013-01	04	13	1	
1013-5524-01	13	30	1		1134-5131-01	14	36	1		1136-5522-01	13	20	1		1156-5106-01	12	07	1	
1021-4429-02	10	17	2		1134-5132-01	14	08	1		1136-5523-03	13	14	1		1156-5767-01	19	14	2	
1031-0207-01	18	17	1		1134-5146-12	14	06	1		1136-5526-01	14	41	1		1156-5804-01	19	17	1	
1032-1606-02	14	22	1		1134-5147-01	14	09	1		1136-5528-01	13	16	1		1156-5828-01	19	16	1	
1033-4402-01	11	27	1		1134-5148-01	14	02	2		1136-5532-01	13	18	1		1156-5837-01	19	15	1	
1033-4709-01	21	11	4		1134-5155-01	14	37	1		1136-5533-01	13	15	1		1156-7304-02	19	19	1	
1036-4503-01	16	31	1		1134-5158-01	14	05	2		1136-5535-01	13	33	3		1156-7501-01	25	33	1	
1036-4504-01	16	35	1		1134-5164-01	14	07	2		1136-5537-01	13	09	2		1159-1938-01	09	10	4	
1036-4524-02	13	22	1		1134-5501-01	14	39	1		1136-5785-02	19	11	2		1159-1938-01	11	18	5	
1036-5514-01	13	27	1		1134-5502-01	14	33	1		1136-6052-12	14	48	1		1161-3120-02	24	08	4	
1038-4006-01	25	17	1		1134-5537-01	13	29	1		1136-7320-02	01	23	1		1162-5583-01	13	08	2	
1038-4512-01	13	25	2		1136-0162-01	11	26	1		1136-7904-01	25	25	1		1164-0105-01	22	14	2	
1038-4701-01	12	11	2		1136-0756-01	25	24	1		1136-7905-01	25	26	2		1164-3020-03	22	15	2	
1050-4805-01	25	16	3		1136-0901-01	13	10	1		1136-7906-01	25	27	1		1164-3022-02	22	13	2	
1052-4461-01	15	08	1		1136-1046-01	01	20	1		1138-5516-02	13	07	1		1171-1125-02	01	02	1	
1052-4461-01	15	10	1		1136-2528-01	07	03	1		1139-1724-01	03	07	1		1174-1015-01	02	21	1	
1052-5409-01	10	13	1		1136-2530-02	07	52	1		1139-2338-01	22	18	2		1177-4261-01	13	45	1	
1052-5501-02	16	32	1		1136-3239-01	21	30	2		1139-3127-01	16	05	1		1177-6203-03	22	09	1	
1053-1324-01	05	05	4		1136-3406-01	04	17	1		1139-3131-01	16	06	1		1177-6204-03	22	09	1	
1053-3103-01	01	09	4		1136-3409-01	11	28	1		1139-3147-01	16	10	1		1200-1411-01	14	49	2	
1053-3103-01	21	23	2		1136-3435-04	10	15	1		1139-3153-01	24	14	4		1200-1431-01	12	14	2	
1054-5101-02	01	11	2		1136-3437-03	10	19	1		1139-3318-01	11	20	1		1200-1442-04	14	26	1	
1054-5101-02	21	24	1		1136-3506-01	17	18	2		1139-3348-02	11	09	1		1200-1462-02	14	31	1	
1065-2753-01	07	13	1		1136-3508-01	17	15	2		1139-3349-01	11	05	1		1200-1566-04	20	05	3	
1065-3169-01	10	14	2		1136-3509-02	17	08	1		1139-3354-01	11	25	1		1200-2105-02	20	27	3	
1065-5106-01	14	54	2		1136-3510-01	17	07	2		1139-3367-01	11	19	1		1200-2105-05	09	23	4	
1067-2566-01	07	08	1		1136-3514-01	17	16	2		1139-3369-01	11	06	2		1200-2105-05	11	02	1	
1067-7901-01	25	23	1		1136-3515-01	17	17	1		1139-3370-01	11	10	1		1200-2105-06	15	24	1	
1070-3076-01	15	05	2		1136-3516-01	17	06	2		1139-4058-02	16	26	1		1200-2105-06	16	09	1	
1070-3076-01	16	19	2		1136-3524-01	16	01	1		1139-4059-01	16	27	1		1200-2105-06	21	18	1	
1074-1026-01	18	11	4		1136-3525-01	15	11	1		1139-4257-01	13	47	2		1200-2626-03	17	19	2	
1074-3316-01	15	13	1		1136-3526-01	16	18	1		1139-4263-01	13	49	1		1200-3134-16	09	21	2	
1074-5778-01	18	13	5		1136-3527-01	16	17	2		1139-4264-01	13	44	1		1200-3134-16	15	16	2	
1075-0765-01	16	34	2		1136-3539-01	16	03	1		1139-5020-02	12	12	1		1200-3134-16	24	22	4	
1075-2579-01	20	30	2		1136-3540-01	16	02	1		1139-5022-01	12	09	1		1200-3223-12	14	03	3	
1075-3356-02	11	03	1		1136-3578-02	15	15	1		1139-5023-01	12	03	2		1200-3225-11	11	23	1	
1075-3389-01	11	07	1		1136-3604-01	17	01	4		1139-5249-01	14	14	1		1200-3434-03	07	25	1	
1075-3390-01	11	08	1		1136-4007-01	22	21	1		1139-5250-01	14	15	1		1273-3048-01	19	18	1	
1075-5749-03	21	12	4		1136-4009-01	16	13	3		1139-7328-01	01	18	1		1273-3516-01	09	12	2	
1075-5751-01	18	06	1		1136-4010-01	16	15	2		1145-5801-01	18	07	1		1274-2605-01	04	09	1	
1075-5754-01	18	04	2		1136-4012-02	16	16	1		1149-0107-01	13	32	1		1274-3605-01	15	04	2	
1075-5779-01	18	05	2		1136-4018-01	04	12	1		1149-3406-01	24	11	2		1274-3605-01	16	20	2	
1075-5795-01	18	19	2		1136-4019-01	16	21	2		1149-3454-01	10	22	1		1300-3131-03	14	46	1	
1075-7345-01	02	16	1		1136-4020-01	16	22	1		1149-3479-01	20	18	1		1300-4342-07	07	21	1	
1076-1203-02	05	08	1		1136-4027-01	16	12	1		1154-3322-01	11	04	2		1400-1122-10	13	02	2	
1076-5905-01	18	02	1		1136-4031-01	16	23	2		1155-0117-01	23	20	1		1400-1122-10	22	22	2	
1079-5530-01	17	03	2		1136-4034-01	16	14	2		1155-0125-02	23	11	1		1400-1134-02	22	24	4	
1079-5530-01	20	07	3		1136-4112-03	13	01	1		1155-0155-03	02	07	1		1400-1154-06	13	24	1	
1079-5530-01	21	04	6		1136-4113-01	13	03	1		1155-0156-03	02	07	1		1400-1185-10	07	04	1	
1100-1333-10	13	38	1		1136-4202-02	13	06	1		1155-0157-03	02	07	1		1400-1226-03	14	35	2	
1100-1335-03	22	23	4		1136-4203-02	13	43	1		1155-1602-03	02	05	1		1400-2230-02	18	08	5	
1100-1342-08	14	43	2		1136-4204-02	13	28	1		1155-1609-01	02	04	1		1500-2340-88	17	05	1	
1100-1901-01	13	39	3		1136-4205-02	13	41	1		1155-1610-01	02	03	1		1500-2640-04	05	07	2	
1100-3130-08	14	44	5		1136-4209-01	13	42	1		1155-1618-01	02	01	1		4002-0102-15	23	06	1	
1100-3132-04	14	11	1		1136-4513-01	04	16	1		1155-1619-01	03	04	4		4002-0103-02	22	02	1	
1129-7303-01	16	30	1		1136-5212-01	12	15	1		1155-1630-01	02	06	1		4002-0104-03	22	04	1	
1134-0154-01	13	40	3		1136-5234-01	12	05	2		1155-1631-01	02	18	1		4002-0105-03	03	14	1	
1134-4119-01	13	05	1		1136-5235-01	12	10	1		1155-2447-02	23	12	1		4002-0113-02	01	17	1	
1134-5103-23	14	51	1		1136-5240-01	12	04	2		1155-2503-01	07	18	1		4002-0114-02	01	17	1	
1134-5104-01	14	52	1		1136-5503-01	13	11	1		1155-3816-01	20	12	2		4002-0115-02	01	17	1	
1134-5105-01	14	29	1		1136-5505-01	13	21	1		1155-3845-01	20	04	1		4002-0120-02	23	07	1	
1134-5106-13	14	30	1		1136-5506-01	13	13	1		1155-5151-01	14	01	1		4002-0151-01	06	19	1	
1134-5107-01	14	32	1		1136-5507-01	07	09	1		1155-7320-12	01	12	1		4002-0213-13	18	10	4	
1134-5112-01	14	45	1		1136-5509-01	13	19	1		1156-0368-01	13	04	1		4002-0221-01	24	03	2	
1134-5114-01	14	20	1		1136-5512-01	13	35	3		1156-1027-01	02	15	1		4002-0231-01	13	37	1	

PART NO.	FIG.	INDEX	QTY		PART NO.	FIG.	INDEX	QTY		PART NO.	FIG.	INDEX	QTY		PART NO.	FIG.	INDEX	QTY	
4002-0306-02	06	10	1		4002-2039-01	05	01	1		4002-3212-01	09	16	2		4002-3708-01	21	42	1	
4002-0311-01	13	50	1		4002-2404-01	04	21	2		4002-3214-05	09	29	2		4002-3710-01	21	25	1	
4002-0313-02	13	51	1		4002-2408-01	22	06	1		4002-3216-01	09	31	2		4002-3712-01	21	43	1	
4002-0316-02	12	19	1		4002-2417-01	04	20	1		4002-3216-01	11	21	2		4002-3713-01	21	46	1	
4002-0317-02	12	19	1		4002-2426-01	22	03	1		4002-3217-01	09	30	2		4002-3715-01	20	20	2	
4002-0319-02	16	36	1		4002-2441-01	23	08	1		4002-3217-01	11	22	2		4002-3715-01	21	47	1	
4002-0321-02	18	23	1		4002-2444-01	23	05	1		4002-3302-02	08	02	1		4002-3716-01	21	38	1	
4002-0322-02	18	23	1		4002-2501-01	07	34	1		4002-3303-02	08	01	1		4002-3717-01	21	48	1	
4002-0323-02	18	23	1		4002-2502-01	07	22	1		4002-3304-01	08	04	2		4002-3721-01	21	02	1	
4002-0531-02	23	23	1		4002-2503-02	07	24	1		4002-3305-01	09	02	1		4002-3722-01	21	03	1	
4002-0751-01	08	12	2		4002-2506-01	07	39	1		4002-3306-01	09	01	1		4002-3723-02	21	35	1	
4002-0753-01	25	35	1		4002-2507-02	07	41	1		4002-3307-03	10	01	1		4002-3724-01	21	40	1	
4002-0901-01	17	20	1		4002-2509-02	07	42	1		4002-3314-01	11	15	1		4002-3725-01	21	50	1	
4002-0902-01	03	08	1		4002-2517-01	04	08	1		4002-3315-01	11	14	1		4002-3726-01	21	22	1	
4002-0902-01	08	08	3		4002-2521-01	04	05	1		4002-3318-01	10	06	2		4002-3727-01	21	07	1	
4002-0902-01	09	19	6		4002-2522-01	04	11	1		4002-3320-02	10	03	4		4002-3728-01	21	05	1	
4002-0902-01	11	01	1		4002-2523-01	07	26	1		4002-3321-01	09	25	2		4002-3729-01	21	06	5	
4002-0902-01	12	02	1		4002-2525-01	07	37	2		4002-3322-01	09	28	1		4002-3731-01	20	32	1	
4002-0902-01	15	21	1		4002-2528-01	07	29	1		4002-3325-01	09	06	1		4002-3732-01	20	33	1	
4002-0902-01	16	08	1		4002-2531-01	07	33	1		4002-3326-01	09	08	1		4002-3733-01	21	08	1	
4002-0902-01	20	22	3		4002-2536-02	07	35	1		4002-3327-01	10	23	1		4002-3734-01	21	10	1	
4002-0902-01	21	49	1		4002-2537-01	04	06	1		4002-3330-01	09	24	2		4002-3735-02	21	16	1	
4002-0902-01	22	19	1		4002-2538-01	04	10	1		4002-3331-02	10	05	4		4002-3737-01	20	15	1	
4002-0903-01	21	13	1		4002-2540-01	07	30	1		4002-3335-01	10	08	1		4002-3739-01	20	16	1	
4002-1001-01	01	16	1		4002-2541-01	07	38	1		4002-3336-01	10	09	1		4002-3741-01	20	17	1	
4002-1002-01	02	08	1		4002-2542-01	04	07	2		4002-3337-02	10	02	2		4002-3742-01	20	10	1	
4002-1003-01	01	08	1		4002-2543-02	07	36	2		4002-3338-01	09	13	1		4002-3743-01	20	11	1	
4002-1004-03	02	23	1		4002-2544-01	07	32	1		4002-3339-01	09	11	1		4002-3744-01	20	14	1	
4002-1005-02	02	13	1		4002-2545-02	07	40	1		4002-3340-01	09	07	1		4002-3746-01	21	17	1	
4002-1006-01	02	11	1		4002-2546-01	07	27	1		4002-3341-01	09	14	2		4002-3747-01	20	24	1	
4002-1012-01	01	10	2		4002-2551-01	07	48	1		4002-3342-01	09	15	1		4002-3748-01	20	25	1	
4002-1017-01	20	34	1		4002-2552-01	07	47	1		4002-3343-01	09	05	1		4002-3750-01	20	29	1	
4002-1020-01	02	17	1		4002-2555-01	07	49	1		4002-3344-01	08	03	4		4002-3752-01	20	28	1	
4002-1041-01	02	20	1		4002-2556-01	07	53	1		4002-3345-01	10	07	2		4002-3753-01	20	03	1	
4002-1043-01	02	19	1		4002-2557-01	07	01	1		4002-3407-01	10	20	1		4002-3754-01	20	31	1	
4002-1310-02	02	02	1		4002-2563-01	07	10	1		4002-3408-02	10	21	1		4002-3755-01	20	23	2	
4002-1315-01	03	01	2		4002-2564-01	07	07	1		4002-3409-01	11	29	1		4002-3759-01	21	27	2	
4002-1317-01	02	09	2		4002-2565-01	07	06	1		4002-3413-01	10	10	1		4002-3760-01	20	21	2	
4002-1319-01	03	11	1		4002-2566-01	07	02	1		4002-3414-01	10	12	1		4002-3763-01	21	20	1	
4002-1320-01	03	18	2		4002-2567-01	07	11	1		4002-3415-01	11	16	1		4002-3765-01	21	09	1	
4002-1329-01	03	10	1		4002-2568-01	07	14	1		4002-3416-01	11	17	1		4002-3766-01	21	14	1	
4002-1368-01	03	05	1		4002-2571-01	07	43	1		4002-3418-01	11	24	1		4002-3767-01	21	44	1	
4002-1369-01	03	06	1		4002-2574-02	07	51	1		4002-3501-02	15	20	1		4002-3768-01	21	45	1	
4002-1422-02	06	09	2		4002-2575-01	07	12	1		4002-3502-02	15	25	1		4002-3769-01	21	53	1	
4002-1423-01	06	04	4		4002-2577-01	07	15	1		4002-3503-01	15	18	1		4002-3770-01	21	01	1	
4002-1424-01	06	05	2		4002-2578-01	07	05	1		4002-3504-01	15	19	1		4002-3771-01	21	21	6	
4002-1433-01	03	02	1		4002-2580-01	07	28	1		4002-3505-01	16	04	1		4002-3774-01	21	37	1	
4002-1434-02	03	03	1		4002-2581-01	02	14	4		4002-3506-02	15	17	1		4002-3776-01	21	28	2	
4002-1451-01	06	03	2		4002-2582-01	07	23	1		4002-3507-02	15	26	1		4002-4001-01	13	48	1	
4002-1452-01	06	02	2		4002-3101-04	24	19	2		4002-3508-01	15	12	1		4002-4004-02	23	17	1	
4002-1453-01	06	12	1		4002-3103-01	24	05	2		4002-3514-01	17	14	1		4002-4102-01	16	29	2	
4002-1454-01	06	13	1		4002-3110-01	22	27	2		4002-3515-01	17	12	1		4002-4103-01	16	28	2	
4002-1456-01	06	01	2		4002-3111-01	22	25	2		4002-3518-01	15	22	1		4002-4105-02	16	33	1	
4002-1458-01	06	14	1		4002-3113-01	24	13	8		4002-3519-01	15	23	1		4002-5001-02	14	38	1	
4002-1468-01	06	06	2		4002-3115-01	24	07	2		4002-3521-01	17	13	1		4002-5003-02	14	17	1	
4002-1471-01	06	15	1		4002-3118-01	24	02	2		4002-3523-01	15	06	2		4002-5005-01	14	53	1	
4002-1480-01	06	07	2		4002-3119-01	24	10	2		4002-3524-01	15	14	1		4002-5006-01	14	50	1	
4002-1481-01	06	08	2		4002-3120-01	24	12	2		4002-3525-01	16	07	1		4002-5007-01	14	21	1	
4002-1601-01	01	06	1		4002-3121-03	24	18	2		4002-3526-01	16	11	1		4002-5009-01	13	26	2	
4002-1602-01	01	05	1		4002-3123-01	08	21	2		4002-3529-01	15	09	1		4002-5010-01	14	28	1	
4002-1603-01	01	01	1		4002-3125-01	05	03	2		4002-3530-01	15	07	1		4002-5011-01	14	25	1	
4002-1604-01	01	04	1		4002-3130-02	24	04	2		4002-3602-01	17	04	1		4002-5012-01	14	18	1	
4002-1605-01	01	03	1		4002-3136-02	24	23	2		4002-3607-01	17	02	1		4002-5013-02	14	24	1	
4002-1606-01	01	07	2		4002-3201-01	09	33	2		4002-3701-01	21	34	1		4002-5014-01	14	23	1	
4002-1953-01	23	18	1		4002-3203-01	09	32	2		4002-3703-01	21	33	2		4002-5015-01	14	19	1	
4002-2014-01	05	04	1		4002-3205-01	09	35	2		4002-3704-01	20	13	4		4002-5022-01	14	55	1	
4002-2020-01	23	16	2		4002-3206-03	09	36	2		4002-3704-01	21	31	4		4002-5030-01	07	46	1	
4002-2035-01	04	18	1		4002-3208-02	09	20	2		4002-3705-01	20	09	4		4002-5031-01	07	50	1	
4002-2037-01	04	01	1		4002-3209-01	09	34	2		4002-3705-01	21	32	4		4002-5032-01	07	45	1	
4002-2038-01	05	02	2		4002-3211-02	09	17	2		4002-3707-01	21	41	1		4002-5033-01	07	44	1	

PART NO.	FIG.	INDEX	QTY		PART NO.	FIG.	INDEX	QTY		PART NO.	FIG.	INDEX	QTY		PART NO.	FIG.	INDEX	QTY	
4002-5034-01	14	27	1		4122-0901-01	09	22	2		9332-3610-13	21	15	1						
4002-5203-01	12	06	1		4122-0901-01	22	26	4		9332-5310-31	23	22	1						
4002-5253-01	04	15	1		4425-0152-02	08	05	2		9332-5910-41	16	25	1						
4002-5254-01	12	13	1		4425-3021-02	08	06	2		9334-1610-11	18	22	1						
4002-5258-01	12	01	1		4425-3024-01	08	07	2		9334-2610-11	03	21	1						
4002-5259-01	12	17	1		4425-3032-01	09	26	2		9334-2610-11	14	12	1						
4002-5502-01	13	23	1		4425-3103-12	10	04	8		9335-1310-11	03	16	1						
4002-5701-01	19	01	1		4425-3103-12	20	19	4		9335-1310-11	03	17	1						
4002-5702-01	19	06	1		4425-3130-01	09	09	1		9335-1310-41	03	20	1						
4002-5704-01	19	03	2		4425-3203-05	24	21	2		9335-1310-41	08	09	2						
4002-5705-01	19	13	2		4425-3204-13	08	10	2		9335-1910-71	03	15	1						
4002-5706-01	19	05	2		4425-3205-01	08	17	2		9335-1910-81	03	12	1						
4002-5709-02	19	12	1		4425-3206-01	08	16	2		9335-1910-81	03	13	1						
4002-5710-02	19	10	1		4425-3207-01	08	18	2		9341-2810-11	22	10	1						
4002-5732-01	18	07	1		4425-3208-01	08	14	2		9343-4210-21	22	17	1						
4002-5737-01	18	03	1		4425-3212-01	08	15	2		9346-3910-41	22	31	6						
4002-5738-01	18	18	1		4425-3213-01	24	20	2		9351-1410-11	04	14	1						
4002-5739-01	18	20	1		4425-3216-02	24	15	2		9352-2910-42	19	02	1						
4002-5754-01	19	08	1		4425-3217-01	24	16	2		9352-2910-52	19	02	1						
4002-5778-01	19	09	1		4425-3224-13	08	22	2		9352-2910-62	19	02	1						
4002-5783-01	18	09	5		4425-3225-02	08	11	2		9352-2910-71	19	04	1						
4002-5790-01	18	12	5		4425-3227-02	08	13	2		9352-2910-81	19	04	1						
4002-5797-01	18	15	1		4425-3241-03	08	20	2		9352-2910-91	19	04	1						
4002-5798-01	18	16	1		4425-3242-02	08	19	2		9352-6310-11	23	15	1						
4002-5799-01	18	01	1		4425-3257-01	24	09	2		9352-6310-31	16	24	1						
4002-6059-01	23	10	1		4425-3626-01	09	27	1		9372-2000-51	18	21	1						
4002-6201-02	22	08	1		4425-3715-01	17	11	1		9372-2910-31	19	07	1						
4002-6202-02	22	08	1		4425-3770-01	17	10	1		9381-4810-31	22	30	1						
4002-6203-01	11	13	2		4426-3138-01	20	08	4		9381-4810-61	22	30	1						
4002-6204-02	22	11	1		4498-3827-01	24	01	2		9381-4911-01	22	30	1						
4002-6206-01	06	11	1		4550-3457-01	10	18	1		9381-4911-21	22	30	1						
4002-6208-01	11	12	1		4640-3831-01	21	36	1		9383-2210-41	04	04	1						
4002-6209-01	03	09	1		4640-3832-01	21	39	1		9383-2310-31	04	03	2						
4002-6209-01	23	01	1		9311-3910-11	07	31	1		9383-2910-11	04	02	1						
4002-6210-01	03	19	2		9312-1910-11	14	47	1		9384-1110-61	25	04	3						
4002-6210-01	04	19	1		9312-1910-21	12	18	1		9384-1310-11	25	05	58						
4002-6210-01	23	09	2		9313-1310-61	22	29	1		9384-1310-81	25	11	31						
4002-7303-02	01	22	1		9313-1310-92	23	14	1		9384-1310-91	25	01	33						
4002-7304-02	01	19	1		9313-1910-31	22	01	2		9384-1311-01	25	02	33						
4002-7305-01	01	15	1		9313-1910-31	23	26	1		9384-1311-11	25	22	3						
4002-7306-01	24	06	2		9313-1911-31	22	07	1		9384-1311-21	25	03	5						
4002-7307-01	24	24	2		9313-1911-41	03	22	1		9384-1621-21	07	20	1						
4002-7308-01	24	17	2		9313-1911-41	23	13	1		9384-1621-81	22	12	2						
4002-7310-01	10	16	1		9314-1000-41	09	03	1		9384-1820-31	25	06	3						
4002-7311-01	10	16	1		9314-1000-51	09	18	1		9384-1900-57	23	19	4						
4002-7312-01	10	11	1		9314-1000-61	15	01	1		9384-1910-61	23	04	6						
4002-7313-01	21	51	1		9314-1000-72	15	03	1		9384-1911-11	25	21	8						
4002-7314-01	17	09	1		9314-1910-81	06	16	1		9384-1920-11	22	05	5						
4002-7315-02	02	22	1		9314-1911-11	20	02	1		9384-1921-01	25	07	3						
4002-7316-01	01	14	1		9314-1911-43	09	04	2		9384-1921-11	25	08	4						
4002-7318-01	21	52	1		9314-2910-71	07	17	1		9384-1921-21	25	09	2						
4002-7319-01	24	17	2		9314-2910-81	07	16	1		9384-1921-31	25	10	13						
4002-7320-01	18	14	1		9314-2910-91	07	19	1		9384-2010-21	25	15	14						
4002-7321-01	01	21	1		9321-2621-11	20	26	1		9384-2010-31	25	12	14						
4002-7322-01	01	21	1		9321-2810-31	11	11	1		9384-2010-41	25	13	6						
4002-7323-01	01	21	1		9321-2910-71	14	42	1		9384-2310-41	02	10	2						
4002-7801-01	06	18	1		9321-2910-81	20	01	1		9384-2610-11	25	14	3						
4002-7802-01	06	17	1		9323-1910-11	23	21	1		9384-2910-11	03	23	1						
4002-7901-01	25	28	1		9324-1810-11	22	20	1		9459-1807-01	22	16	1						
4002-7902-01	25	32	1		9324-1810-21	22	20	1											
4002-7903-01	25	29	1		9324-1810-31	22	20	1											
4002-7904-01	25	30	1		9326-1000-51	23	25	1											
4002-7905-01	25	31	1		9326-1000-61	23	02	2											
4003-0751-01	25	34	1		9326-1000-71	23	24	1											
4003-7301-01	01	13	1		9326-1610-21	05	09	1											
4003-7325-01	01	24	1		9326-1910-21	03	24	1											
4101-5206-01	12	08	1		9326-1910-21	22	28	1											
4102-3133-02	21	26	1		9326-1910-21	23	03	1											
4102-3149-01	20	06	1		9326-2900-06	14	10	1											
4114-5202-02	12	16	1		9331-2710-11	05	06	1											



Copyright
2000 MINOLTA Co., Ltd.
Printed in Japan

4003-7995-21 00082830