C-306/306L

PARTS MANUAL

MINOLTA

SFIX CHART

SFIX No.	COUNTRY	VOLTAGE	PRODUCT-NAME	PAPER SIZE	SFIX No.	COUNTRY	VOLTAGE	PRODUCT-NAME	PAPER SIZE
611	JAPAN	-	C-306	METRIC					
612	USA/CANADA PHILIPPINE	-	C-306	INCH	812	USA/CANADA PHILIPPINE	-	C-306L	INCH
614	EUROPE S ARABIA BRAZIL CURACAO TAIWAN S AFRICA AUSTRALIA HONG KONG L AMERICA KOREA	-	C-306	INCH/METRIC	814	EUROPE S ARABIA BRAZIL CURACAO TAIWAN S AFRICA AUSTRALIA HONG KONG L AMERICA KOREA	-	C-306L	INCH/METRIC

CONTENTS

1. HOUSING ••••••

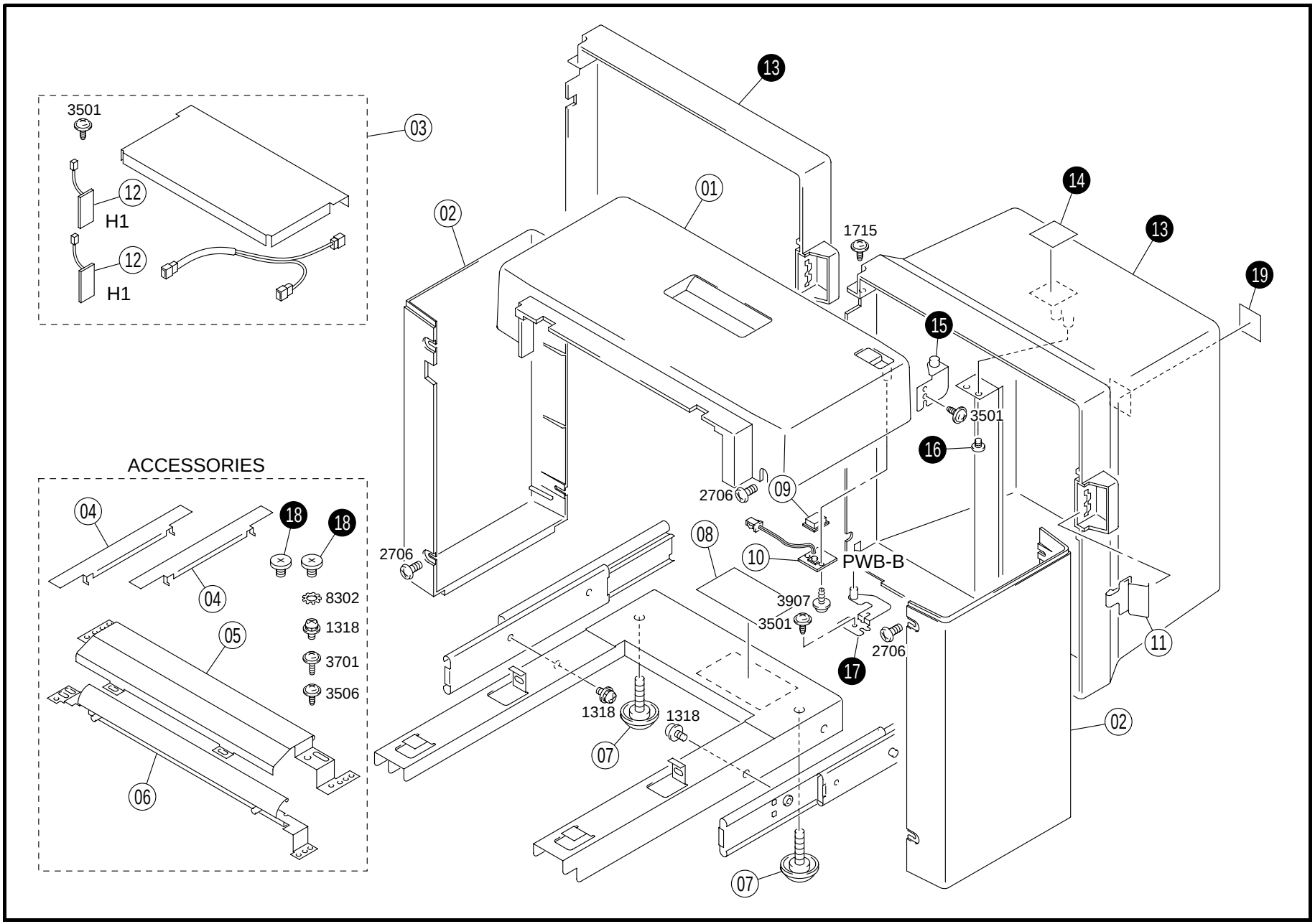
3501
03
12
H1
12
H1
ACCESSORIES
04
04
18
18
8302
1318
3701
3506
05
06
13
01
02
1715
14
13
19
15
3501
16
2706
09
2706
08
10
PWB-B
3907
3501
2706
17
11
1318
1318
07
02
07

INDEX	PART NO.	PART NAME			REC	QTY	INDEX	PART NO.	PART NAME	REC	QTY
01	4431-1401-04	TOP COVER				1					
02	4431-1402-01	SIDE COVER				2					
03	4483-0901-02	HEATER KIT	OPTION			1					
04	4431-0161-01	PLATE				2					
05	4431-7501-23	GUIDE PLATE				1					
06	4431-0209-24	GUIDE PLATE				1					
07	4431-7607-01	ADJUSTING BOLT				2					
08	4431-7313-01	LABEL JAM REMOVAL				1					
09	4483-1004-01	BUTTON				1					
10	1285-0102-12	PW BOARD-B		(PWB-B)		1					
11	1230-3201-02	LOCK RELEASE LEVER				1					
12	9352-6610-21	HEATER	OPTION	(H1)		2					

INDEX	PART NO.	PART NAME		REC	QTY	SFIX
13	4431-1403-03	DOOR	C-306		1	611, 612, 614
13	4483-3001-01	DOOR	C-306L		1	812, 814
14	4483-7310-01	LABEL	C-306L		1	812, 814
15	4431-0201-03	HINGE	C-306		1	611, 612, 614
15	4483-0201-01	HINGE	C-306L		1	812, 814
16	4483-3008-01	SHOULDER SCREW	C-306L		1	812, 814
17	4431-0202-03	HINGE	C-306		1	611, 612, 614
17	4483-0202-01	HINGE	C-306L		1	812, 814
18	4483-3009-01	SHOULDER SCREW	C-306L		2	812, 814
19	4483-7312-01	SEAL	C-306L		1	812, 814

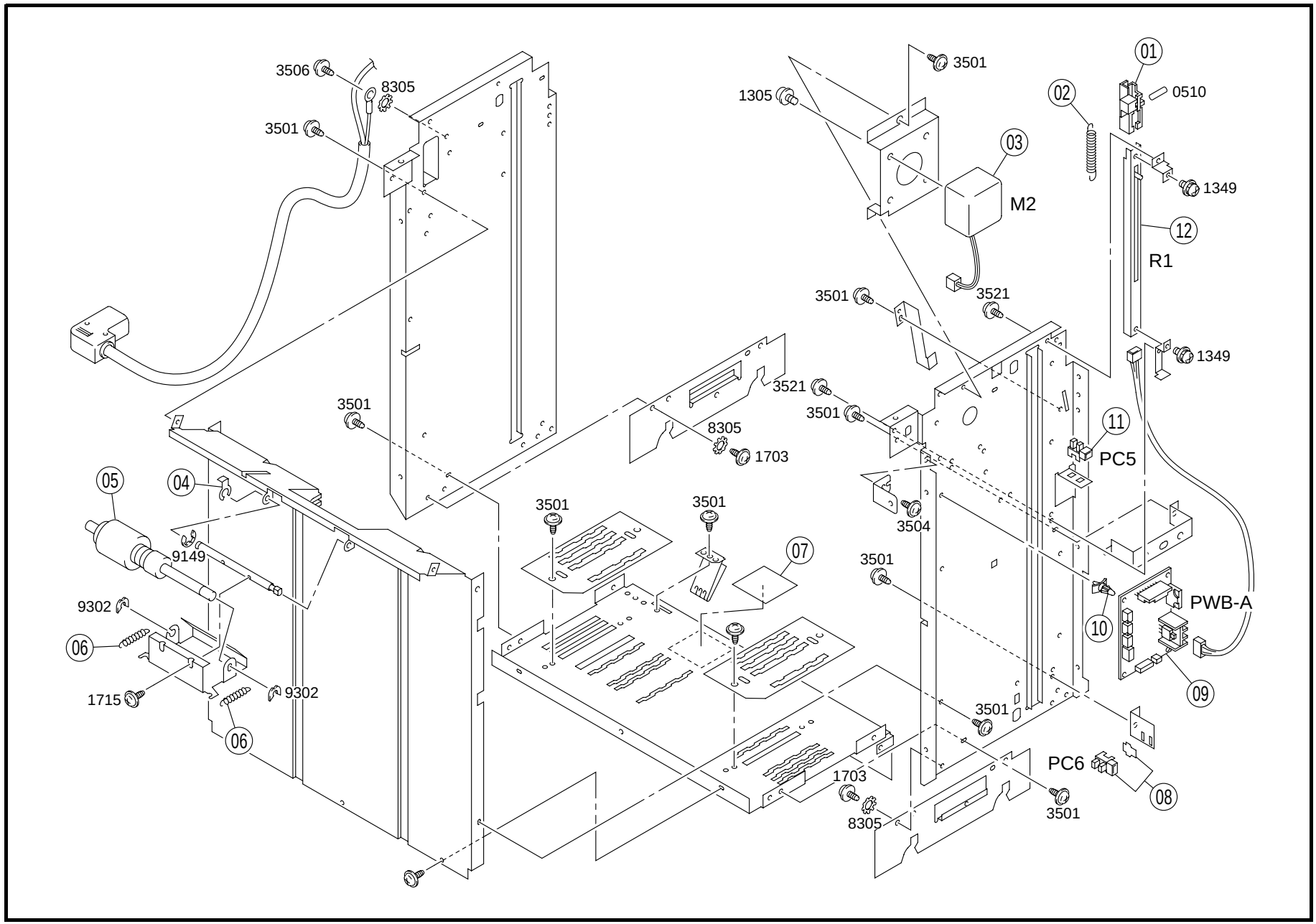
3506
8305
3501
1305
3501
01
02
0510
03
M2
1349
12
R1
3501
3521
1349
3521
3501
3501
8305
1703
11
PC5
05
04
3501
3501
3504
9149
07
3501
9302
PWB-A
06
10
1715
9302
09
06
3501
PC6
1703
08
8305
3501

INDEX	PART NO.	PART NAME	REC	QTY	INDEX	PART NO.	PART NAME	REC	QTY
01	4483-3404-01	LEVER		1					
02	1161-3126-01	TENSION SPRING		1					
03	9314-1611-91	MOTOR (M2)		1					
04	1033-4402-01	STOPPER RING		1					
05	4421-0165-01	ROLLER	RP	1					
06	4431-3327-01	TENSION SPRING		2					
07	4431-7314-01	LABEL DO NOT LOAD		1					
08	4642-0901-01	PHOTO INTERRUPTER (PC6)		1					
09	4483-0101-01	PW BOARD-A (PWB-A)	RP	1					
10	9384-1900-56	PWB SUPPORT 6.35H		4					
11	9335-1310-31	PHOTO INTERRUPTER (PC5)		1					
12	9492-1039-02	RESISTOR (R1)		1					

INDEX	PART NO.	PART NAME	REC	QTY	SFIX

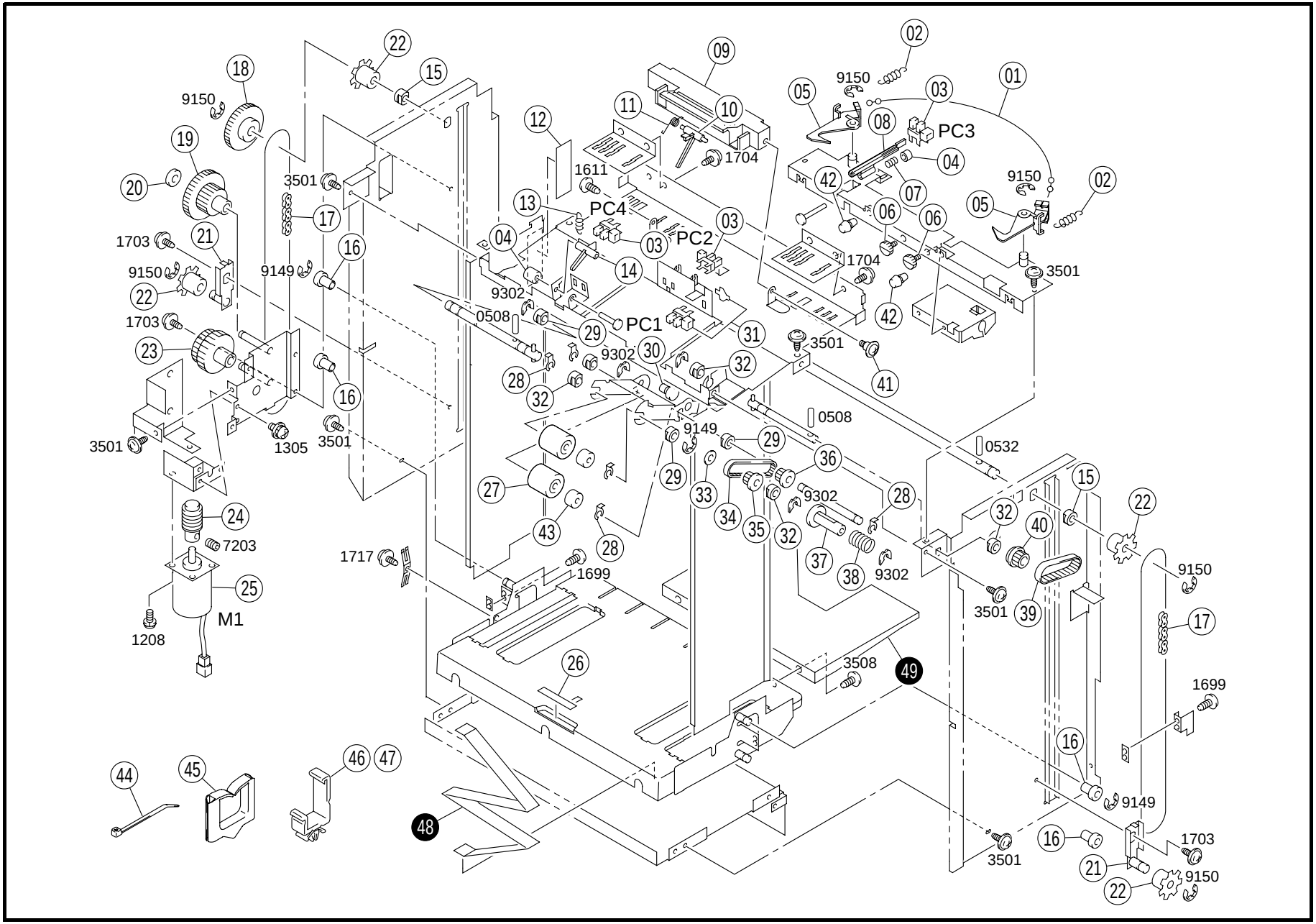
01
02
03
04
05
06
07
08
09
10
11
12
13
14
15
16
17
18
19
20
21
22
23
24
25
26
27
28
29
30
31
32
33
34
35
36
37
38
39
40
41
42
43
44
45
46
47
48
49
PC1
PC2
PC3
PC4
M1
9150
9149
9302
1703
1704
1611
1305
1717
1699
1208
7203
3501
3508
0508
0532

INDEX	PART NO.	PART NAME	REC	QTY
01	4431-2317-01	WIRE		1
02	4431-2315-01	TENSION SPRING		2
03	9335-1310-31	PHOTO INTERRUPTER (PC2.3.4)		3
04	1200-2105-04	COLLAR		2
05	4431-2404-04	LOCK LEVER		2
06	4431-2351-01	SHOULDER SCREW		2
07	4431-2316-01	PRESSURE SPRING		1
08	4431-2405-01	ACTUATOR		1
09	4483-1003-01	LEVER		1
10	4431-2403-01	ACTUATOR		1
11	4431-3324-01	TORSION SPRING		1
12	4454-7321-02	LABEL MAX		1
13	1280-3202-01	TENSION SPRING		1
14	4431-2402-13	ACTUATOR		1
15	1200-3252-02	BUSHING		2
16	1257-4401-01	GUIDE ROLL		4
17	4431-2318-01	CHAIN 136LNK		2
18	1257-4301-02	GEAR 30T		1
19	1257-4303-02	GEAR 18/50T		1
20	1230-1026-01	WASHER		1
21	4431-0207-01	MOUNTING PLATE		2
22	1230-1022-02	SPROCKET 13T		4
23	4431-2503-01	GEAR 28/56T		1
24	4431-2505-01	WORM GEAR		1

INDEX	PART NO.	PART NAME	REC	QTY
25	1257-6101-01	MOTOR (M1)		1
26	4431-3307-01	FRICTION SHEET		1
27	1075-3051-01	ROLLER	RP	2
28	1033-4402-01	STOPPER RING		5
29	1200-3221-12	BUSHING		3
30	4431-3325-01	WEIGHT		1
31	4642-0901-01	PHOTO INTERRUPTER (PC1)		1
32	1159-1938-01	BUSHING		5
33	4431-3320-01	WASHER		1
34	4431-3403-01	TIMING BELT		1
35	1500-2513-05	PULLEY 18T		1
36	1500-2513-04	PULLEY 21T		1
37	1052-4412-01	JOINT		1
38	1400-1155-18	PRESSURE SPRING		1
39	4435-2601-01	TIMING BELT		1
40	4483-3402-01	PULLEY 23T		1
41	1230-1034-01	SHOULDER SCREW		1
42	1258-5301-02	RUBBER CUSHION		2
43	1259-4404-01	COLLAR		2
44	9384-1311-11	CABLE TIE 104L		4
45	1257-6802-01	EDGE COVER		2
46	9384-1311-01	WIRING SADDLE 27H		2
47	9384-1311-21	WIRING SADDLE 16.8H		1

INDEX	PART NO.	PART NAME	REC	QTY	SFIX
48	1285-3050-01	POLYESTER FILM C-306		1	611, 612, 614
48	4431-2334-01	POLYESTER FILM C-306L		1	812, 814
49	4483-3002-01	TABLE C-306L		1	812, 814

INDEX	PART NO.	PART NAME	ILLUST
0508 0532	9752-2010-50 9752-2514-50	PIN	
1208	9644-0306-13	SCREW	
1318	9646-0408-13	SCREW	
1611 1699	9654-0308-07 9654-0312-13	SCREW	
1703 1704 1715 1717	9737-0406-13 9737-0306-13 9737-0306-07 9737-0304-13	SCREW	
2706	9654-0408-14	SCREW	
3501 3506	9735-0306-13 9735-0406-13	TAPPING SCREW	
3701	9739-0408-13	TAPPING SCREW	
3907	9742-0308-13	TAPPING SCREW	
8305	9712-0400-01	WASHER	
9149 9150	9721-0400-14 9721-0600-14	RETAINING RING	
9302	4425-3001-01	RETAINING RING	

INDEX	PART NO.	PART NAME	ILLUST

INDEX	PART NO.	PART NAME	ILLUST

PART NO.	FIG.	INDEX	QTY		PART NO.	FIG.	INDEX	QTY		PART NO.	FIG.	INDEX	QTY		PART NO.	FIG.	INDEX	QTY	
1033-4402-01	02	04	1		4483-3404-01	02	01	1											
1033-4402-01	03	28	5		4483-7310-01	01	14	1											
1052-4412-01	03	37	1		4483-7312-01	01	19	1											
1075-3051-01	03	27	2		4642-0901-01	02	08	1											
1159-1938-01	03	32	5		4642-0901-01	03	31	1											
1161-3126-01	02	02	1		9314-1611-91	02	03	1											
1200-2105-04	03	04	2		9335-1310-31	02	11	1											
1200-3221-12	03	29	3		9335-1310-31	03	03	3											
1200-3252-02	03	15	2		9352-6610-21	01	12	2											
1230-1022-02	03	22	4		9384-1311-01	03	46	2											
1230-1026-01	03	20	1		9384-1311-11	03	44	4											
1230-1034-01	03	41	1		9384-1311-21	03	47	1											
1230-3201-02	01	11	1		9384-1900-56	02	10	4											
1257-4301-02	03	18	1		9492-1039-02	02	12	1											
1257-4303-02	03	19	1																
1257-4401-01	03	16	4																
1257-6101-01	03	25	1																
1257-6802-01	03	45	2																
1258-5301-02	03	42	2																
1259-4404-01	03	43	2																
1280-3202-01	03	13	1																
1285-0102-12	01	10	1																
1285-3050-01	03	48	1																
1400-1155-18	03	38	1																
1500-2513-04	03	36	1																
1500-2513-05	03	35	1																
4421-0165-01	02	05	1																
4431-0161-01	01	04	2																
4431-0201-03	01	15	1																
4431-0202-03	01	17	1																
4431-0207-01	03	21	2																
4431-0209-24	01	06	1																
4431-1401-04	01	01	1																
4431-1402-01	01	02	2																
4431-1403-03	01	13	1																
4431-2315-01	03	02	2																
4431-2316-01	03	07	1																
4431-2317-01	03	01	1																
4431-2318-01	03	17	2																
4431-2334-01	03	48	1																
4431-2351-01	03	06	2																
4431-2402-13	03	14	1																
4431-2403-01	03	10	1																
4431-2404-04	03	05	2																
4431-2405-01	03	08	1																
4431-2503-01	03	23	1																
4431-2505-01	03	24	1																
4431-3307-01	03	26	1																
4431-3320-01	03	33	1																
4431-3324-01	03	11	1																
4431-3325-01	03	30	1																
4431-3327-01	02	06	2																
4431-3403-01	03	34	1																
4431-7313-01	01	08	1																
4431-7314-01	02	07	1																
4431-7501-23	01	05	1																
4431-7607-01	01	07	2																
4435-2601-01	03	39	1																
4454-7321-02	03	12	1																
4483-0101-01	02	09	1																
4483-0201-01	01	15	1																
4483-0202-01	01	17	1																
4483-0901-02	01	03	1																
4483-1003-01	03	09	1																
4483-1004-01	01	09	1																
4483-3001-01	01	13	1																
4483-3002-01	03	49	1																
4483-3008-01	01	16	1																
4483-3009-01	01	18	2																
4483-3402-01	03	40	1																



Copyright
2000 MINOLTA Co., Ltd.
Printed in Japan

4642-7995-21 00082830